Spare parts list
Four row trailed potato planters
Kverneland Underhaug 3200

UH121432

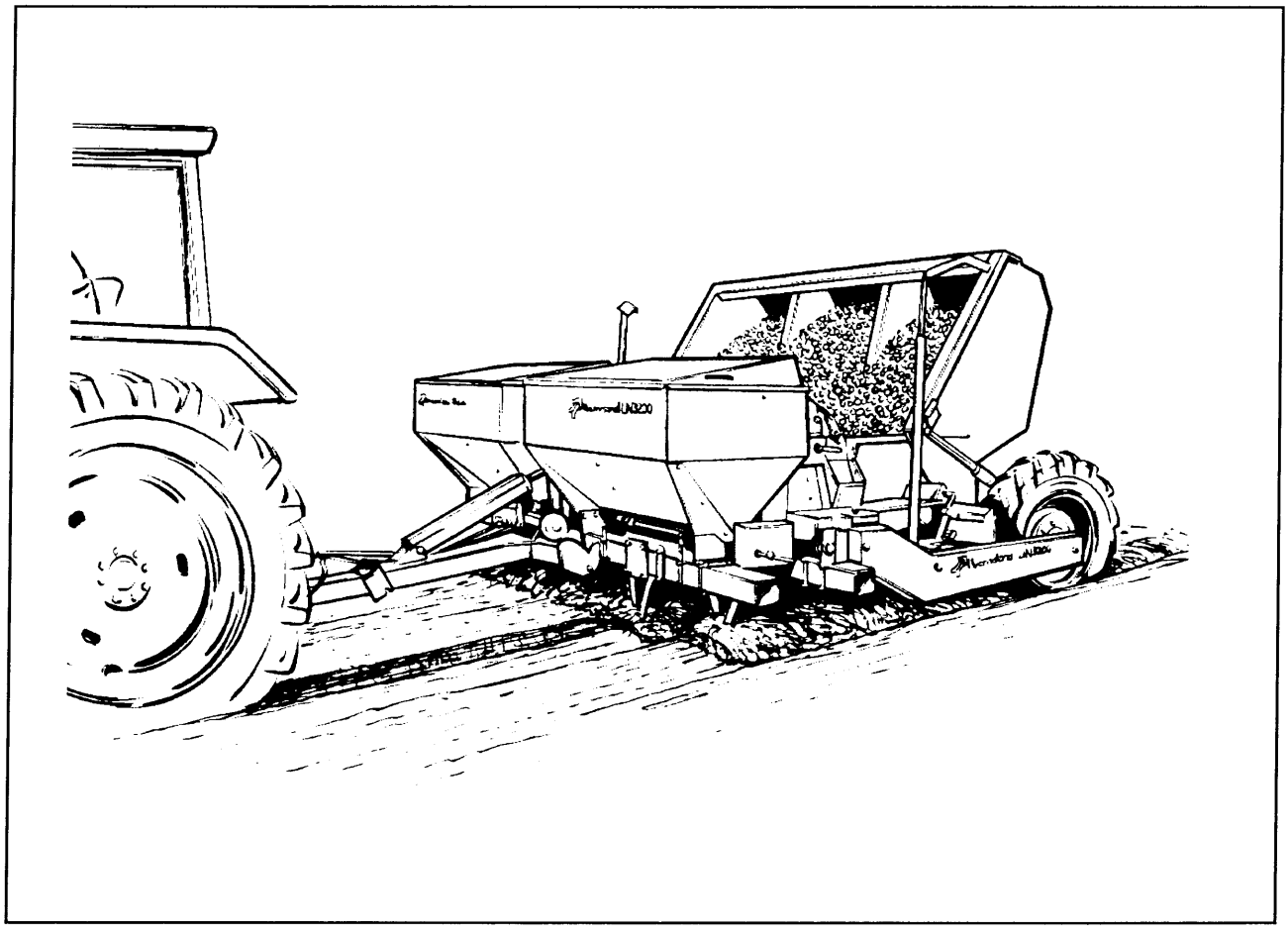

Reservedelskatalog Kverneland Underhaug 3200, utgave 3

Spare parts catalogue
Four row trailed potato planters model group 3200
Reservedelsliste
Firerads slepte potetsettere modellgruppe 3200

Valid from serial no./Gyldig fra serienr.:	**→ 234&32023549→**

⚠ Important!

All references to right and left hand side apply to the view of the machine when standing behind and facing the direction of travel.

Please note the following when ordering spare parts:

It should always be referred to serial number. This is found on the machine's identification plate.
The spare part's catalogue number and description should be used.
The reference number is used only to help identifying the spare part on the illustration.

The arrow on the illustration shows the direction of travel

⚠ Viktig!

Alle referanser til retningene høgre og venstre henviser til delenes posisjon når en står bak maskinen og ser i farts-retningen.

Ved bestilling av deler må en merke seg følgende:

Oppgi alltid maskinens serienummer. Dette står på identifikasjonsskiltet på maskinen.
Delens nummer (6 siffer) og navn må oppgis.
Referansenummeret brukes bare for å sammenholde deletegning og betegnelse i lista; og skal derfor ikke oppgis.

Pilen på illustrasjonen viser maskinens kjøreretning.

Supplied by:

kverneland group

Kverneland Nærbø AS
Torlandsvegen 3,
N-4365 Nærbø,
Norway

Content

Innhold

		Fig.	Page/Side
Drawbar	Drag	1	2
Planting unit & rigid furrow openers	Setteenhet og faste setteskjær	2	6
Cup belts	Koppebelter	3	10
Upper drive shafts	Toppaksler	4	12
Choke plates	Strupeplater	5	14
Upper roller drive	Toppakseldrift	6	16
Main frame, intermediate shaft	Ramme, mellomaksel		
& wheel shafts	og hjulaksel	7	18
Main drive	Settertransmisjon	8	22
Coverers lifting equipment & clutch latch	Løfteutstyr skjær		
	og mekanisk kopling	9	28
Hopper	Tank	10	30
Granule applicator	Granulatsåmaskin	11	34
Disc coverers	Rulleskjær	12	38
Ridging shovels	Hyppeskjær	13	40
Fertilizer attachment, roller feed system	Radgjødsler, rulleutmating	14	44
Fertilizer attachment, conveyor feed system	Radgjødsler, belteutmating	15	50
Gear box for	Girboks		
conveyor type fertilizer attachment	for radgjødsler m/belteutmating	16	56
Fertilizer disc coulters & fertilizer tines	Gjødselrulleskjær og gjødseltinder	17	60
Fertilizer disc coulters type HD	Gjødselrulleskjær type HD	18	62
Floating furrow openers	Flytende setteskjær	19	64
Mutual depth wheel for furrow openers	Felles dybdehjul for setteskjær	20	66
Planting monitor	Settekontroll	21	68
Hydraulic clutch	Hydraulisk drivkopling		
& hopper hydraulics	og tankhydraulikk	22	70
Track markers	Spormarkører		
with singleacting hydraulics	m/enkeltvirkende hydraulikk	23	72
Track markers	Spormarkører		
with doubleacting hydraulics	m/dobbeltvirkende hydraulikk	24	74
Support wheels	Støttehjul	25	78
Land wheels	Bærehjul	26	80
Misc. hydraulics up to 1993 models	Div. hydr.utstyr t.o.m. 1993-mod.	27	82
Area & speed meter	Areal- og hastighetsmåler	28	84
Road lights	Lysutstyr	29	86
Furrow openers	Setteskjær		
type HD with shock absorber	type HD m/sjokkdemper	30	88
Mounted drawbar & offset drawbar kit	Trekkramme og off-set drag-sats	31	90
Drive roller chains	Drivkjeder	32	92

Kverneland

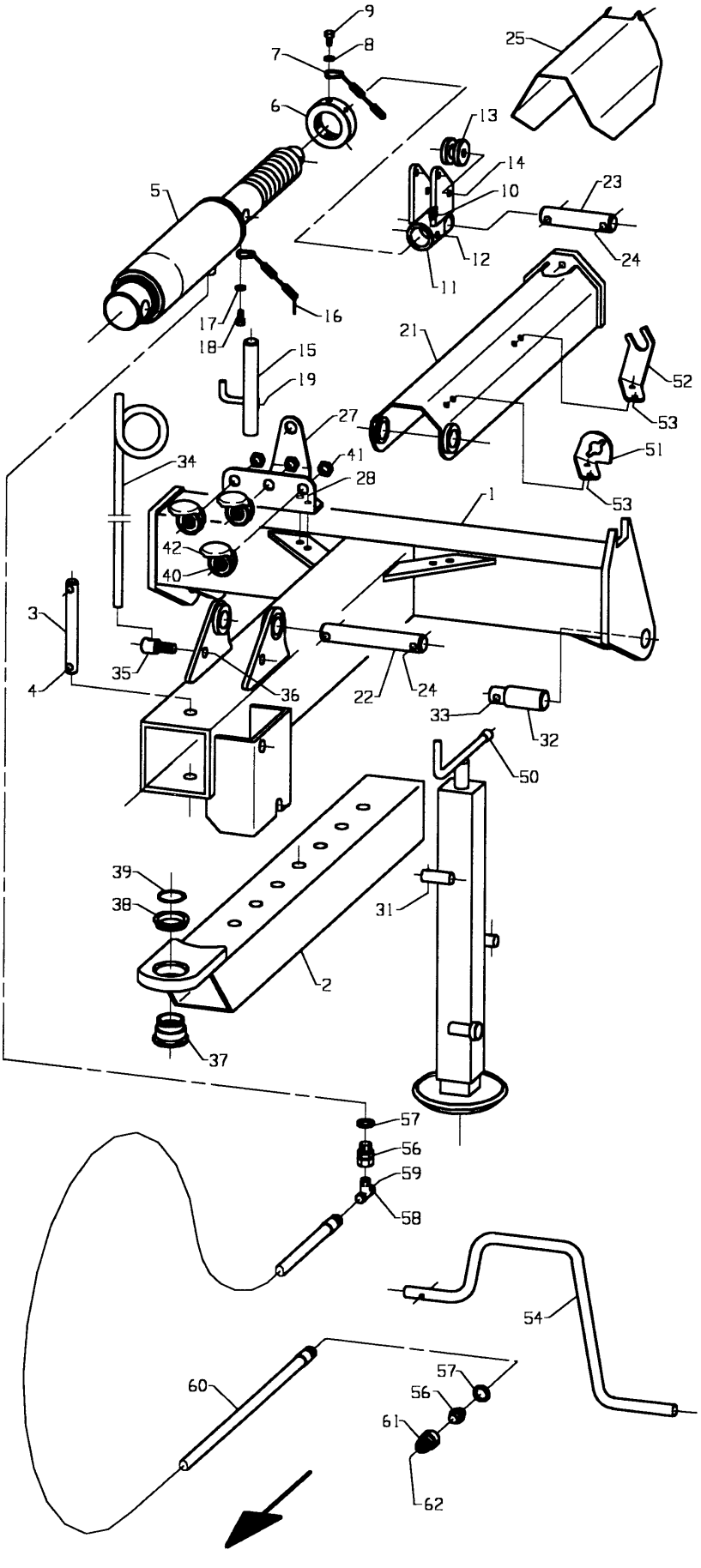

Fig. 1

Utgave: / Issue:	3	Redskap: / Implement:	POTETSETTER SLEPT 3200 POTATO PLANTER TRAILED 3200	Kverneland
Dato: / Date:	94-11	Enhet / Unit	DRAG DRAWBAR	Fig nr.: 1

Ref. No.	Delenr. Part no.	Ant. Qty.	Gjenstand	Description	Anmerkning Note
1-39	**217250**	**1**	**DRAG KOMPL.**	**DRAWBAR ASSY**	
1	217251	1	DRAGBOM	DRAWBAR	
2	217255	1	DRAGARM	DRAWBAR	
3	217283	1	BOLT Ø20-Ø12/134/Ø12	BOLT	
4	867061	2	RINGPINNE Ø12 (7/16") ELZN	RING PIN 12 (7/16") GALV.	
5-19	**217142**	**1**	**DRAGSYLINDER KOMPL.**	**DRAWBAR CYLINDER ASSY**	
5	217138	1	SYLINDER Ø80 DRAG	CYLINDER	
*	217141	1	SYLINDERPAKNINGSSETT Ø80/Ø80	CYLINDER SEAL KIT	
6	217136	1	STILLMUTTER	ADJUSTING NUT	
7	217149	1	KJETTING Ø3-26X208	CHAIN	
8	860158	1	BRIKKE Ø8.4-Ø17X1.6	WASHER Ø8.4-Ø17X1.6	
9	813416	1	SEKSKANTSKRUE M8X16-8.8 GALV.	HEX. BOLT M8X16-8.8 GALV.	
10	867014	1	FJØRPINNE Ø4.0X75 ELZN	SPRING PIN Ø4.0X75 GALV	
11	217145	1	SYLINDERKLAU	CYLINDER YOKE	
12	866650	1	SPENNHYLSE 12X50 ELZN	TENSION PIN 12X50X2.5	
13	219622	1	RULL	CHAIN ROLLER	
14	866650	1	SPENNHYLSE 12X50 ELZN	TENSION PIN 12X50X2.5	
15	217260	1	LÅSEBOLT SV.	LOCK BOLT	
16	219658	1	KJETTING Ø3-26X104	CHAIN Ø3-26X156	
17	860158	1	BRIKKE Ø8.4-Ø17X1.6	WASHER Ø8.4-Ø17X1.6	
18	813416	1	SEKSKANTSKRUE M8X16-8.8 GALV.	HEX. BOLT M8X16-8.8 GALV.	
19	867014	1	FJØRPINNE Ø4.0X75 ELZN	SPRING PIN Ø4.0X75 GALV	
21	217265	1	SYLINDERSKJERM	CYLINDER GUARD	
22	217270	1	BOLT Ø30-Ø12/152/Ø12	BOLT	
23	217271	1	BOLT Ø30-Ø12/100/Ø12	BOLT	
24	867061	4	RINGPINNE Ø12 (7/16") ELZN	RING PIN 12 (7/16") GALV.	
25	217273	1	TOPPSKJERM	TOP GUARD	
26	813600	1	SEKSKANTSKRUE M10X100-8.8 GALV	HEX. BOLT M10X100-8.8 GALV.	
26	852160	1	NYLOCKMUTTER M10 GALV	NYLOCK NUT M10 GALV.	
27	217295	1	FOTHOLDER	HOLDER	
28	813525	2	SEKSKANTSKRUE M10X25-8.8 GALV.	HEX. BOLT M10X25-8.8 GALV.	
28	860160	2	BRIKKE Ø10.5-Ø21X2	WASHER Ø10.5-Ø21X2	
28	852160	2	NYLOCKMUTTER M10 GALV	NYLOCK NUT M10 GALV.	
29	813525	4	SEKSKANTSKRUE M10X25-8.8 GALV.	HEX. BOLT M10X25-8.8 GALV.	
29	860160	4	BRIKKE Ø10.5-Ø21X2	WASHER Ø10.5-Ø21X2	
29	852160	4	NYLOCKMUTTER M10 GALV	NYLOCK NUT M10 GALV.	
30	301267	1	FOT KOMPL.	PARKING LEG ASSY	
31	867056	1	RINGPINNE Ø6 ELZN	RING PIN 6 GALV	
32	217280	2	TREKKBOLT KAT 2 Ø28-Ø35	DRAW BOLT	
33	867061	2	RINGPINNE Ø12 (7/16") ELZN	RING PIN 12 (7/16") GALV.	
34	217296	1	SLANGEHENGER	HOSE HOLDER	
35	300852	1	HENGERSKRUE	SCREW	
36	860175	1	BRIKKE Ø26.0-Ø44X4	WASHER Ø25.3-Ø44X4	
36	850166	1	SEKSKANTMUTTER M16-8 GALV	HEX. NUT M16 GALV	
37-39	**301274**	**1**	**DRAGØYEFORING KOMPL.**	**YOKE BUSHING ASSY**	
37	301275	1	FORING	BUSHING	
38	301276	1	RING	RING	
39	868445	1	LÅSERING UTV. A45X1.75	CIRCLIP A45X1.75	
40	217675	3	SLANGEPARKERINGSHOLDER	HOLDER	
41	259345	3	BRIKKE Ø18.5-Ø34.5X1.25	WASHER Ø18.5-Ø34.5X1.25	
42	217676	3	SLANGEPARKERINGSLOKK	COVER	
50	410493	2	DEKKHYLSE Ø12 FOR PARK.FOT	SPACER Ø12, PARKING LEG	
51	215543	1	FESTE NEDRE	LOWER BRACKET	
52	215544	1	FESTE ØVRE	UPPER BRACKET	
53	813420	4	SEKSKANTSKRUE M8X20-8.8 ELZN	HEX. BOLT M8X20-8.8 GALV	
53	860158	4	BRIKKE Ø8.4-17X1.6 ELZN	WASHER Ø8.4-Ø17X1.6	
53	852158	4	NYLOCKMUTTER M8 ELZN.	NYLOCK NUT M8 GALV.	

Kverneland

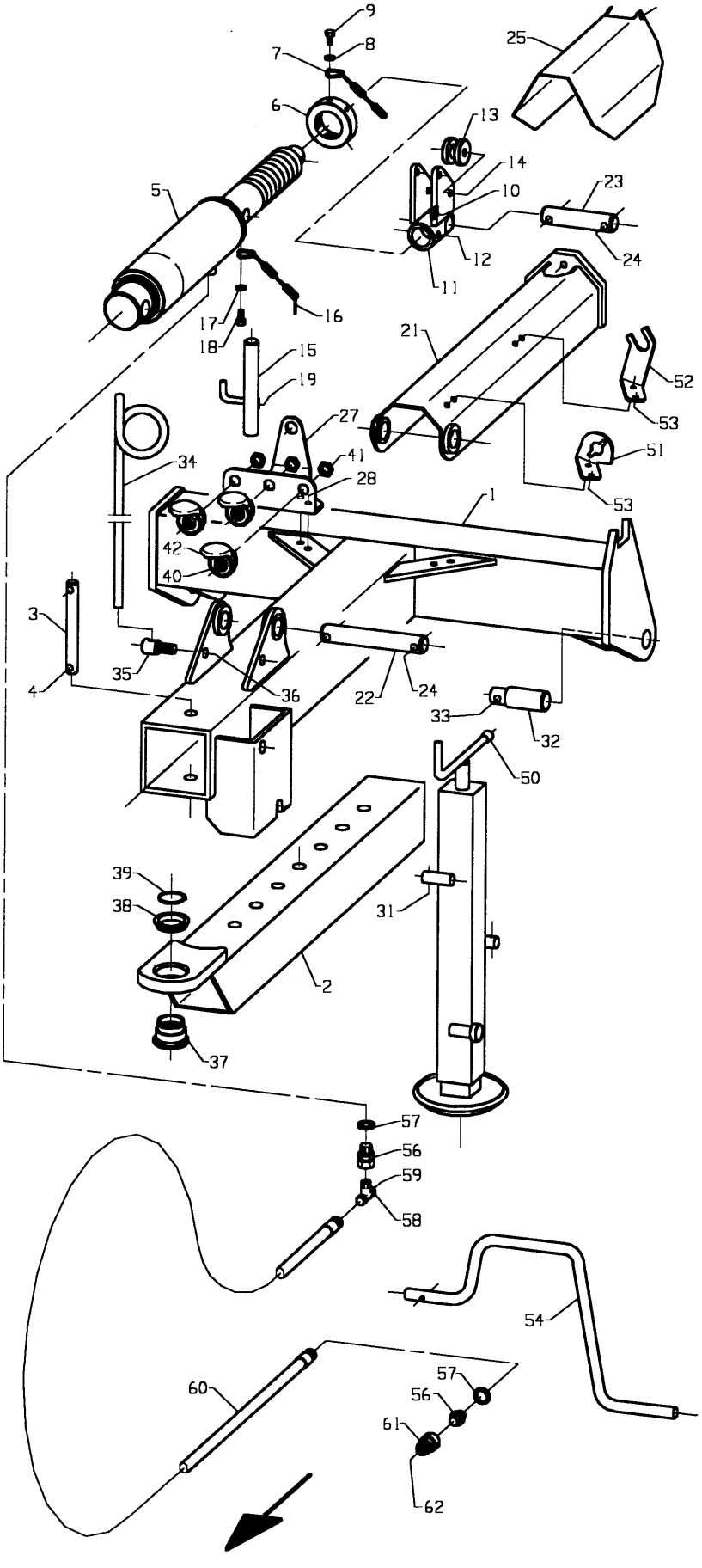

Fig. 1

Utgave: / Issue:	3	Redskap: / Implement:	POTETSETTER SLEPT 3200 POTATO PLANTER TRAILED 3200	Kverneland
Dato: / Date:	94-11	Enhet / Unit	DRAG DRAWBAR	Fig nr.: 1

Ref. No.	Delenr. Part no.	Ant. Qty.	Gjenstand	Description	Anmerkning Note
54-55	**215540**	**1**	**SVEIV KOMPL.**	**HANDLE ASSY**	
54	215541	1	SVEIV	HANDLE	
55	866336	1	SPENNHYLSE 6X36	TENSION PIN 6X36X1.25	
56	410747	2	ANSATS 3/8"-1/2" BSP UU	MALE ADAPTOR 3/8"-1/2"	
57	219669	2	PAKNINGSRING 1/2" BOND SEAL	SEAL 1/2" PP 45-D	
58	300996	1	T-KOPLING 3/8" BSP UUI	T-JUNCTION R3/8"-R3/8"	
60	410754	1	HYD.SL.3/8" 2750 I06I06-0G	HYDR. HOSE 3/8" 2750	
61	410755	1	HURTIGKOPLING 1/2" MALE	QUICK COUPLING 1/2" MALE	
62	410723	1	STØVBESKYTTER GUL	DUST CAP YELLOW	

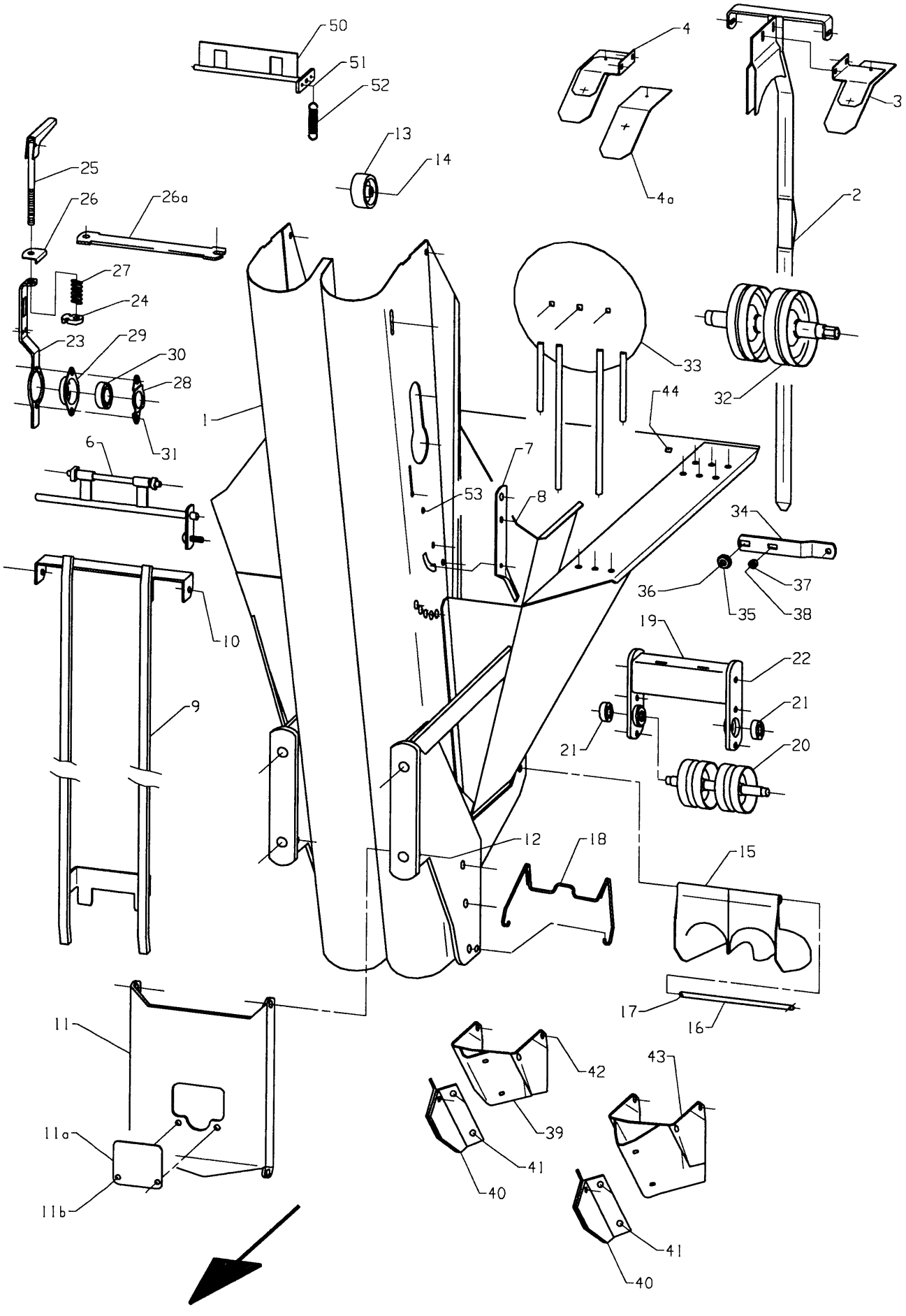
50
51
52
13
14
4
4a
3
2
25
26
26a
27
24
23
29
30
28
31
1
33
32
44
6
7
53
8
34
36
35
37
38
10
19
22
21
21
20
9
12
18
15
17
16
11
11a
11b
42
39
41
40
43
41
40

Fig. 2

Utgave: / Issue: 3	Redskap: / Implement: POTETSETTER SLEPT 3200 / POTATO PLANTER TRAILED 3200	Kverneland
Dato: / Date: 94-11	Enhet / Unit: SETTEENHET / PLANTING UNIT	Fig nr.: 2

Ref. No.	Delenr. Part no.	Ant. Qty.	Gjenstand	Description	Anmerkning Note
1a	215010	1	SETTEENHET	PLANTING UNIT	
1b	215006	1	SETTEENHET STORFRØ SV.	PLANTING UNIT LARGE SEED	
2-5	**215635**	**1**	**BELTESKINNE KOMPL.**	**BELT GUIDING BAR ASSY**	
2	215636	1	BELTESKINNE	BELT RAIL	
3	215645	1	TOPPLATE V. KOMPL.	TOP PLATE LEFT ASSY	
4	215646	1	TOPPLATE H. KOMPL.	TOP PLATE RIGHT ASSY	
4a	215649	2	GUMMILEDER	GUIDING RUBBER	
5	821420	4	LÅSESKRUE M8X20-4.6 ELZN.	CARRIAGE BOLT M8X20-4.6 GALV.	
5	860158	4	BRIKKE Ø8.4-Ø17X1.6	WASHER Ø8.4-Ø17X1.6	
5	852158	4	NYLOCKMUTTER M8 GALV	NYLOCK NUT M8 GALV.	
6	215081	1	RISTEAKSEL	AGITATOR	
7	222599	1	RISTESPAK M/NAGLE	AGITATOR LEVER	
8	852158	1	NYLOCKMUTTER M8 GALV	NYLOCK NUT M8 GALV.	
9	215035	1	STØTTESKINNE	SUPPORTING BAR	
10	813416	2	SEKSKANTSKRUE M8X16-8.8 GALV.	HEX.BOLT M8X16-8.8 GALV.	
10	852158	2	NYLOCKMUTTER M8 GALV	NYLOCK NUT M8 GALV.	
10	860158	2	BRIKKE Ø8.4-Ø17X1.6	WASHER Ø8.4-Ø17X1.6	
11	215305	1	STØTTEPLATE	SUPPORTING PLATE	
11a	215306	1	DEKKPLATE	PLATE	
11b	813416	2	SEKSKANTSKRUE M8X16-8.8 GALV.	HEX. BOLT M8X16-8.8 GALV.	
11c	850158	2	SEKSKANTMUTTER M8-8 GALV	HEX. NUT M8-8 GALV.	
12	813525	2	SEKSKANTSKRUE M10X25-8.8 GALV.	HEX. BOLT M10X25-8.8 GALV.	
12	852160	2	NYLOCKMUTTER M10 GALV	NYLOCK NUT M10 GALV.	
12	860160	2	BRIKKE Ø10.5-Ø21X2	WASHER Ø10.5-Ø21X2	
13	241341	2	HJUL PLAST Ø50	WHEEL	
14	813450	2	SEKSKANTSKRUE M8X50-8.8 GALV.	HEX.BOLT M8X50-8.8 GALV.	
14	850158	4	SEKSKANTMUTTER M8-8 ELZN.	HEX. NUT M8-8 GALV.	
14	860158	6	BRIKKE Ø8.4-Ø17X1.6	WASHER Ø8.4-Ø17X1.6	
15	215025	1	SLUSE	LOCK	
16	215049	1	BOLT Ø10-Ø4/230/Ø4	BOLT Ø10-Ø4/230/Ø4	
17	867013	2	FJØRPINNE Ø2.5X41 GALV	SPRING PIN Ø2.5X41 GALV	
18	215026	1	SLUSEFJØR	SPRING	
19-21	**215130**	**1**	**BOTNLAGER KOMPL.**	**LOWER BELT BEARING ASSY**	
19	215131	1	BOTNLAGER	LOWER BELT BEARING	
20	215125	1	BOTNAKSEL	LOWER BELT SHAFT	
21	870718	2	KULELAGER 6203 2RS-C3 SPESIAL	BALL BEARING 6203-2RS1-C3	
22a	813620	2	SEKSKANTSKRUE M12X20-8.8 ELZN	HEX. BOLT M12X20-8.8 GALV.	
22b	813625	2	SEKSKANTSKRUE M12X25-8.8 ELZN	HEX. BOLT M12X25-8.8 GALV	
22	860163	4	BRIKKE Ø13-Ø24X2.5	WASHER Ø13-Ø24X2.5	
23-31	**215090**	**2**	**LAGEROPPHENG KOMPL.**	**BEARING HOLDER ASSY**	
23	215091	1	LAGEROPPHENG	BEARING HOLDER	
24	222628	1	MUTTERBRIKKE	WASHER	
25	222621	1	STRAMMESKRUE KOMPL.	TENSION SCREW	
26	215032	1	STRAMMEBRIKKE	TENSION WASHER	
26a	215033	1	STRAMMEÅK	TENSION YOKE	
27	215093	1	TRYKKFJØR Ø4.5-Ø20X51	COMPRESSION SPRING	
28	215092	1	LAGERSTYRING	GUIDE BEARING	
29	219250	1	LAGERHUS Ø55-Ø36	BEARING HOUSING Ø55-Ø36	
30	870632	1	KULELAGER 6006-2RS	BALL BEARING 6006-2RS1	
31	839420	2	SENKSKRUE M/SPOR M8X20 GALV.	SLOTTED COUNTERSUNK SCR.M8X20	
31	852158	2	NYLOCKMUTTER M8 GALV	NYLOCK NUT M8 GALV.	
31	860158	2	BRIKKE Ø8.4-Ø17X1.6	WASHER Ø8.4-Ø17X1.6	
32	215120	1	TOPPAKSEL	UPPER BELT SHAFT	
33	215058	1	TALLERKEN	AGITATOR DISC	
34	215060	1	TALLERKENARM	AGITATOR DISC ARM	
35	221316	1	BØSSING	BUSHING	
36	821535	1	LÅSESKRUE M10X35-4.6 GALV.	CARRIAGE BOLT M10X35-4.6 GALV.	

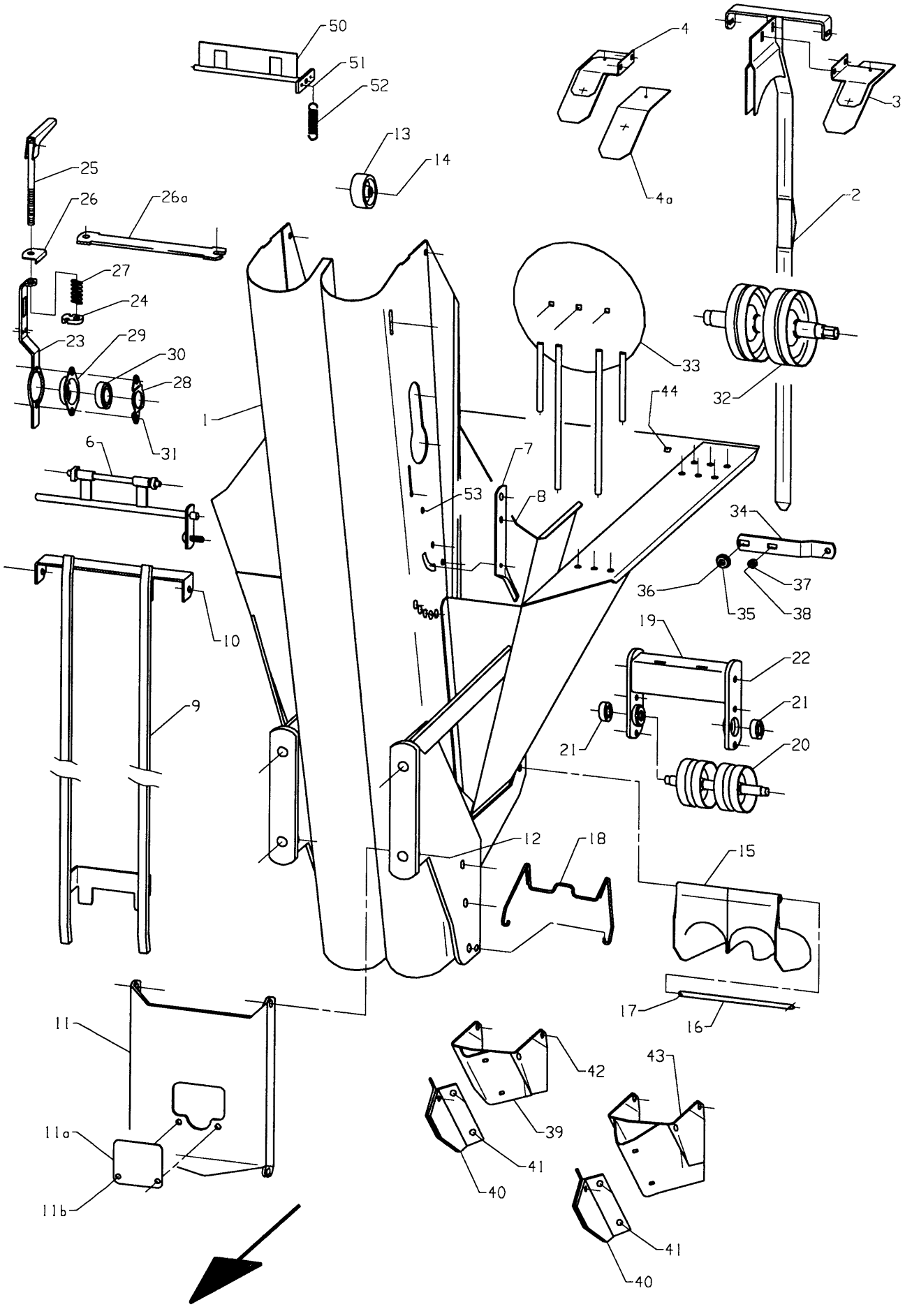
50
51
52
13
14
4
4a
3
2
25
26
26a
27
24
23
29
30
28
31
1
33
32
44
6
7
53
8
34
36
35
37
38
10
19
22
21
21
20
9
12
18
15
17
16
11
11a
11b
42
39
41
40
43
41
40

Fig. 2

Utgave: / Issue:	3	Redskap: / Implement:	POTETSETTER SLEPT 3200 POTATO PLANTER TRAILED 3200	Kverneland
Dato: / Date:	94-11	Enhet / Unit	SETTEENHET PLANTING UNIT	Fig nr.: 2

Ref. No.	Delenr. Part no.	Ant. Qty.	Gjenstand	Description	Anmerkning Note
36	852160	1	NYLOCKMUTTER M10 GALV	NYLOCK NUT M10 GALV.	
36	860160	1	BRIKKE Ø10.5-Ø21X2	WASHER Ø10.5-Ø21X2	
37	222640	1	HYLSE Ø11.4-Ø17.2X10	SPACER Ø11.4-Ø17.2X10	
38	821430	1	LÅSESKRUE M8X30-4.6 GALV	CARRIAGE BOLT M8x30-4.6 GALV	
38	852158	1	NYLOCKMUTTER M8 GALV	NYLOCK NUT M8 GALV.	
38	860158	1	BRIKKE Ø8.4-Ø17X1.6	WASHER Ø8.4-Ø17X1.6	
39-41	**215311**	**1**	**FAST SKJÆR KOMPL.**	**FIXED FURROW OPENER ASSY**	
39	215312	1	FAST SKJÆR	FIXED FURROW OPENER	
40	215314	1	SLITESPISS	WEARING POINT	
41	839525	4	SENKSKRUE M/SPOR M10X25 GALV.	COUNTERSUNK BOLT M10X25 GALV	
41	850160	4	SEKSKANTMUTTER M10-8 ELZN.	HEX. NUT M10-8 GALV.	
41	860160	4	BRIKKE Ø10.5-Ø21X2	WASHER Ø10.5-Ø21X2	
42	813525	2	SEKSKANTSKRUE M10X25-8.8 ELZN	HEX. BOLT M10X25-8.8 GALV.	
42	860160	4	BRIKKE Ø10.5-Ø21X2 ELZN	WASHER Ø10.5-Ø21X2	
42	852160	2	NYLOCKMUTTER M10 ELZN.	NYLOCK NUT M10 GALV.	
			FAST SKJÆR DYPT KOMPL.	**FIXED DEEP FURROW OPENER ASSY**	**EXTRA**
43	215303	1	FAST SKJÆR DYPT	DEEP FURROW OPENER	"
			BELTESTOPPER EN RAD KOMPL.	**CUP BELT STOPPER ONE ROW UNIT**	**EXTRA**
50	215096	1	BELTESTOPPER	CUP BELT STOPPER	
51	813320	1	SEKSKANTSKRUE M6X20-8.8 GALV.	HEX. BOLT M6X20-8.8 GALV	
51	850156	1	SEKSKANTMUTTER M6-8 GALV	HEX. NUT M6-8 GALV.	
52	241438	1	STREKKFJØR Ø1.8-Ø18.2X57	SPRING	
53	813430	1	SEKSKANTSKRUE M8X30-8.8 GALV	HEX. BOLT M8X30-8.8 GALV.	
53	850158	1	SEKSKANTMUTTER M8-8 GALV	HEX. NUT M8-8 GALV.	
53	852158	1	NYLOCKMUTTER M8 GALV	NYLOCK NUT M8 GALV.	

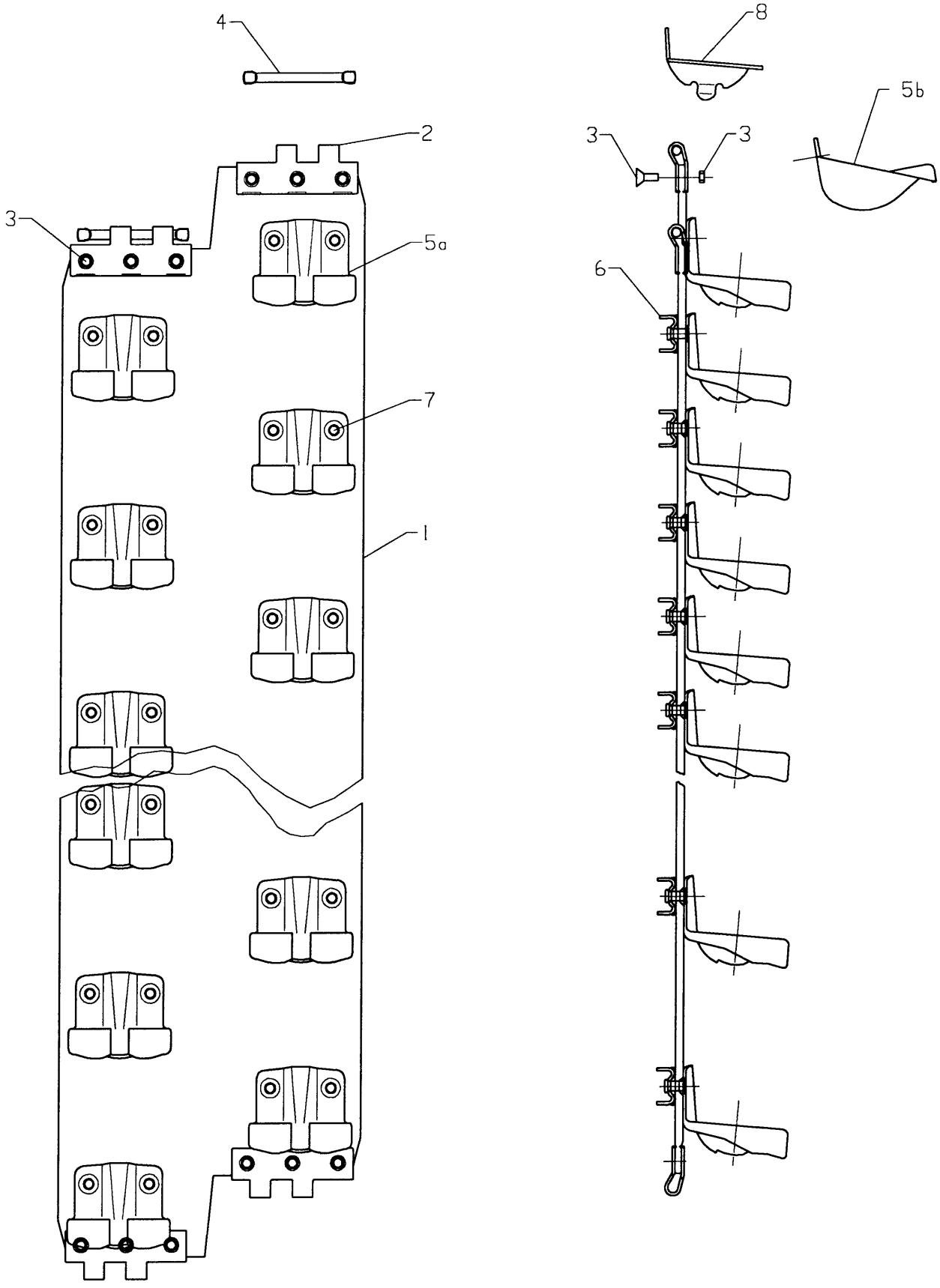

Fig. 3

Utgave: / Issue: 3	Redskap: / Implement: POTETSETTER SLEPT 3200 / POTATO PLANTER TRAILED 3200	Kverneland
Dato: / Date: 94-11	Enhet / Unit: KOPPEBELTE / CUP BELT	Fig nr.: 3

Ref. No.	Delenr. Part no.	Ant. Qty.	Gjenstand	Description	Anmerkning Note
		2R 4R			
	215161		**KOPPEBELTE 66-125**	**CUP BELT 66-125**	
	215163		**KOPPEBELTE 74-125**	**CUP BELT 74-125**	
1	215151	1	BELTEREIM 125	RUBBER BELT 125	
2	215156	4	HENGSLELEDD	CONNECTOR	
3	839316	12	SENKSKRUE KRYSSPOR M6X16 ELZN.	REC. COUNTERSUNK SCREW M6X16	
3	852156	12	NYLOCKMUTTER M6 ELZN.	NYLOCK NUT M6 GALV.	
4	215158	2	HENGSLEBOLT	CONNECTOR PIN	
5a	222822	34	KOPP 66	CUP	
5b	222823	34	KOPP 74	LARGE CUP	
6	215154	34	KOPPESTYRING	CUP GUIDING	
7	862063	68	POPPNAGLE 6.4X17.8 STÅL	RIVET 6.4X17.8 STEEL	
*	215171	4	INNLEGGSKOPPER 2-RADS 74-125	68 INSERTS 222821	EXTRA
8	222821	136	INNL.KOPP FOR 74 KOPP	LARGE INSERT	"
*	215170	4	INNLEGGSKOPPER, 2-RADS 66-125	68 INSERTS 222825	"
8	222825	136	INNL.KOPP FOR 66 KOPP	SMALL CUP INSERT	"

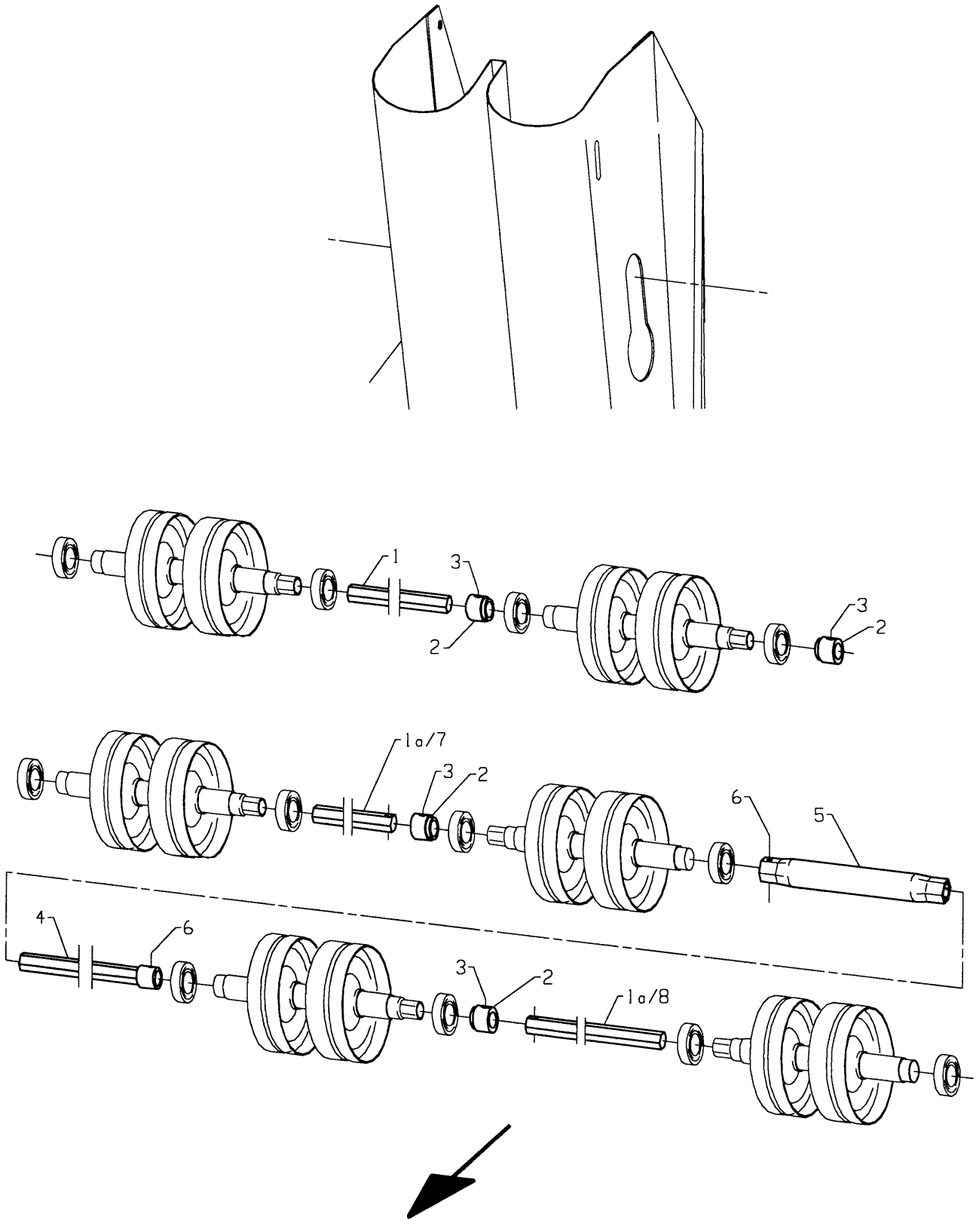

Fig. 4

Utgave: / Issue:	3	Redskap: / Implement:	POTETSETTER SLEPT 3200 POTATO PLANTER TRAILED 3200	Kverneland
Dato: / Date:	94-11	Enhet / Unit	TOPPAKSEL TOP DRIVE SHAFT	Fig nr.: 4

Ref. No.	Delenr. Part no.	Ant. Qty.	Gjenstand	Description	Anmerkning Note
		2R 4R			
1	215111	1	DRIVAKSEL 2-R	DRIVE SHAFT 2-R	
1a	215112	2	DRIVAKSEL 4-R	DRIVE SHAFT 4-R	UN3100
2	215141	2 3	STOPPRING Ø22-M12	STOP RING Ø22-M12	
3	831616	2 3	GJENGESTIFT 6KT.HOL M12X16	HEADLESS SCREW M12X16	
4	215114	1	KOPLINGSAKSEL SV.	SHAFT COUPLING	
5	215116	1	LEDDAKSELHYLSE	SHAFT SPACER	
6	866336	2	SPENNHYLSE 6X36 ELZN	TENSION PIN 6X36X1.25	
7	217031	1	DRIVAKSEL 4R SLEPT	DRIVE SHAFT 4R TRAILED	UN3200
8	215112	1	DRIVAKSEL 4-R	DRIVE SHAFT 4-R	"

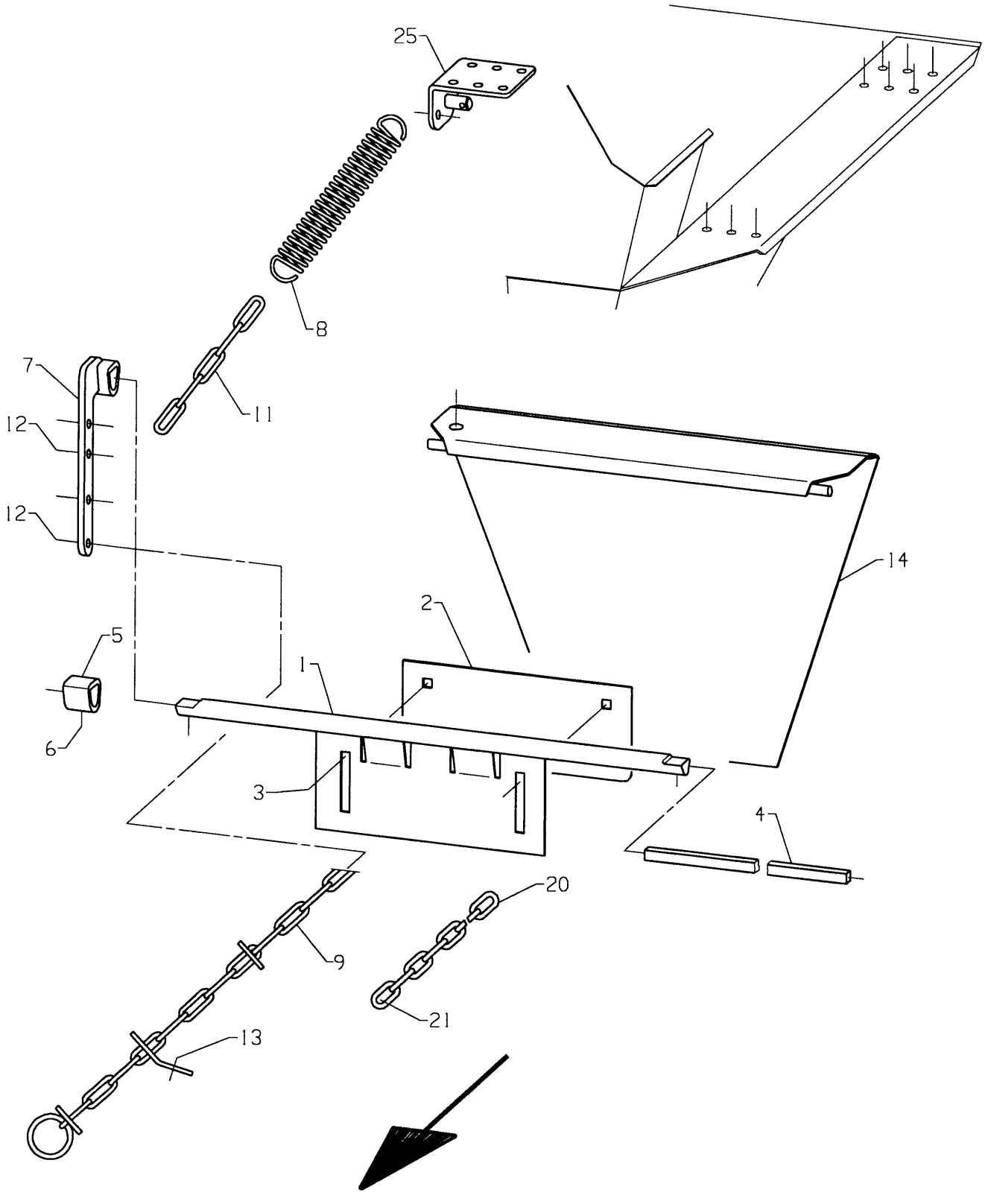

Fig. 5

Utgave: / Issue: 3	Redskap: / Implement: POTETSETTER SLEPT 3200 / POTATO PLANTER TRAILED 3200	Kverneland
Dato: / Date: 94-11	Enhet / Unit: STRUPEPLATER / CHOKES	Fig nr.: 5

Ref. No.	Delenr. Part no.	Ant. Qty.	Gjenstand	Description	Anmerkning Note
		2R 4R			
			STRUPEPLATER 2-R KOMPL.	**CHOKE 2-R ASSY.**	
			STRUPEPLATER 4-R KOMPL.	**CHOKE 4-R ASSY.**	
1	215190	2 4	SVINGPLATE SV.	ADJUSTING PLATE	
2	215193	2 4	SVINGPLATEFORLENGER	ADJUSTING PLATE EXTENSION	
3	821420	4 8	LÅSESKRUE M8X20-4.6 GALV	CARR.BOLT M8X20-4.6 GALV.	
3	855378	4 8	STJERNERATT M8	HANDWHEEL M8	
3	850158	4 8	SEKSKANTMUTTER M8-8 GALV	HEX.NUT M8-8 GALV.	
3	231499	4 8	BRIKKE Ø11-Ø22X5	WASHER Ø11-Ø22X5	
4	222676	1 3	FIRKANTAKSEL	SQUARED SHAFT	
5	222667	1 5	STOPPRING	STOP RING	
6	813520	1 5	SEKSKANTSKRUE M10X20-8.8 GALV.	HEX.BOLT M10X20-8.8 GALV.	
7	215175	1 1	FJØRARM SV.	SPRING ARM	
8	229219	1 1	STREKKFJØR Ø3,5-Ø26,5X132	SPRING	
9	215180	1 1	REGULERINGSKJETTING	ADJUSTING CHAIN	
11	219658	1 1	KJETTING Ø3-26X156	CHAIN Ø3-26X156	
12	813430	2 2	SEKSKANTSKRUE M8X30-8.8 GALV	HEX.BOLT M8X30-8.8 GALV.	
12	850158	2 2	SEKSKANTMUTTER M8-8 GALV	HEX.NUT M8-8 GALV.	
12	852158	2 2	NYLOCKMUTTER M8 GALV	NYLOCK NUT M8 GALV.	
13	813520	1 1	SEKSKANTSKRUE M10X20-8.8 GALV.	HEX.BOLT M10X20-8.8 GALV.	
13	852160	1 1	NYLOCKMUTTER M10 GALV	NYLOCK NUT M10 GALV.	
13	860160	1 1	BRIKKE Ø10.5-Ø21X2	WASHER Ø10.5-Ø21X2	
14	215185	2 4	STRUPEPLATE M/GUMMI	ADJUSTING CHAIN W/RUBBER FLAP	
20	215181	1	KJETTING Ø5-22X528	CHAIN	93-MOD.
21	813420	1	SEKSKANTSKRUE M8X20-8.8 GALV.	HEX. BOLT M8X20-8.8 GALV	
21	852158	1	NYLOCKMUTTER M8 GALV	NYLOCK NUT M8 GALV.	
21	860158	2	BRIKKE Ø8.4-Ø17X1.6	WASHER Ø8.4-Ø17X1.6	
25	215062	1	HENGSLETAPP	HINGE PIN	

Kverneland

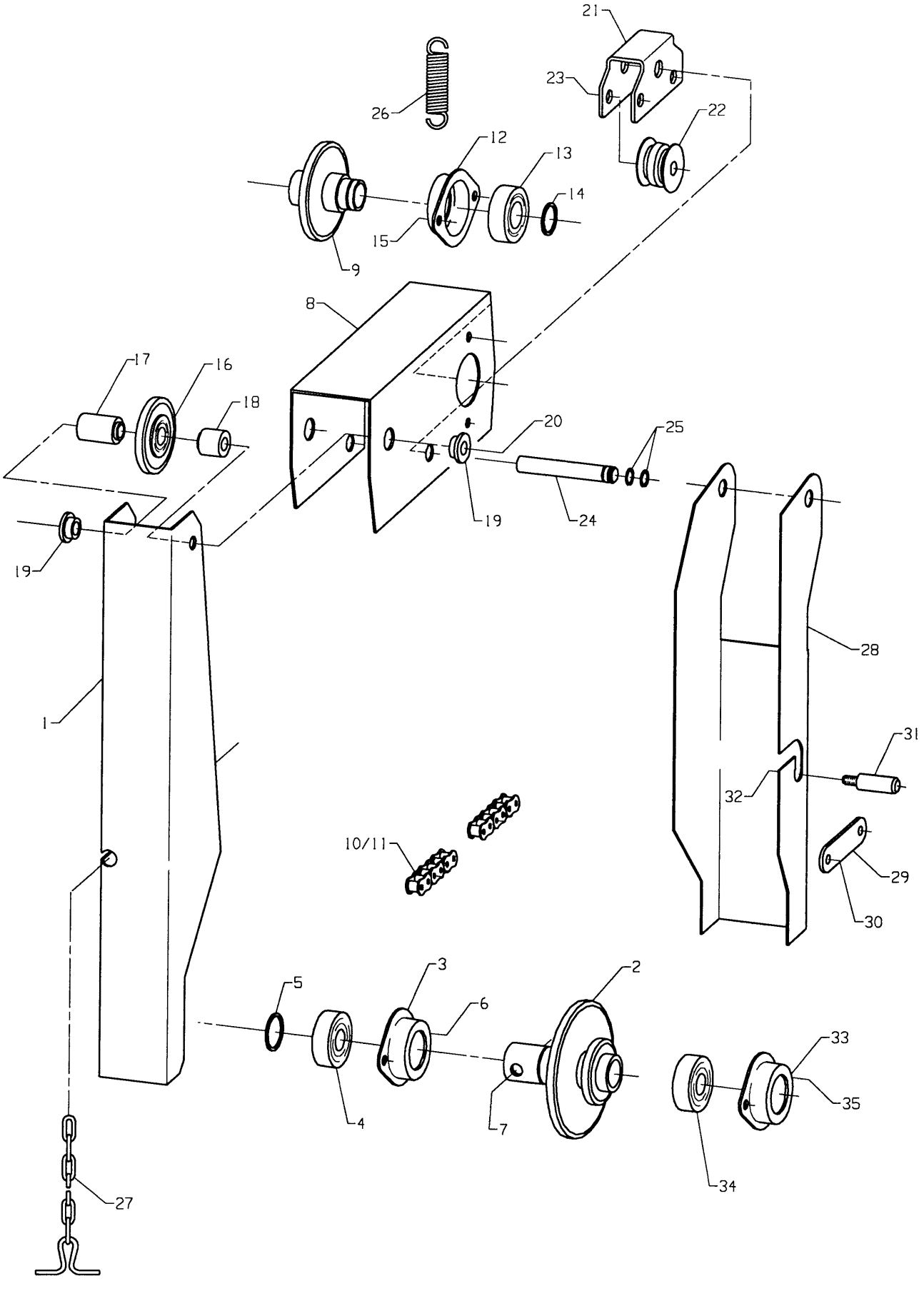

Fig. 6

Utgave: / Issue: 3	Redskap: / Implement: POTETSETTER SLEPT 3200 / POTATO PLANTER TRAILED 3200	Kverneland
Dato: / Date: 94-11	Enhet / Unit: TOPPAKSELDRIFT / UPPER ROLLER DRIVE	Fig nr.: 6

Ref. No.	Delenr. Part no.	Ant. Qty.	Gjenstand	Description	Anmerkning Note
*	215290		TOPPAKSELDRIFT KOMPL.	TOP DRIVE SHAFT ASSY	
1	215292	1	KJEDESKJERM NEDRE TOPPAKSELDR.	CHAIN GUARD U. TOP DRIVE SHAFT	
2	215148	1	KJEDEHJUL 5/8" 24-11T SV.	SPROCKET 5/8" 24-11T	
3	215102	1	LAGERHUS Ø62-Ø47	BEARING HOUSING Ø62-Ø47	
4	870637	1	KULELAGER 6007-2RS M/GUMMISIDE	BALL BEARING 6007-2RS1	
5	868435	1	LÅSERING UTV. A35X1.5	CIRCLIP A35X1.50	
6	813416	2	SEKSKANTSKRUE M8X16-8.8 ELZN	HEX. BOLT M8X16-8.8 GALV.	
6	852158	2	NYLOCKMUTTER M8 ELZN.	NYLOCK NUT M8 GALV.	
6	860158	4	BRIKKE Ø8.4-17X1.6 ELZN	WASHER Ø8.4-Ø17X1.6	
7	831616	1	GJENGESTIFT 6KT.HOL M12X16	HEADLESS SCREW M12X16	
8a-11	215300	1	TOPPAKSELSKJERM M/HJUL 5/8"17T	TOP DRIVE SHAFT GUARD 5/8" 17T	
8b-11	215301	1	TOPPAKSELSKJERM M/HJUL 5/8"24T	TOP DRIVE SHAFT GUARD 5/8" 24T	
8a	215293	1	KJEDESKJERM ØVRE TOPPAKSEL	CHAIN GUARD UPPER TOP SHAFT	
8b	215294	1	KJEDESKJERM ØVRE TOPPAKSEL EX.	KJEDESKJERM ØVRE TOPPAKSEL EX.	
9a	215149	1	KJEDEHJUL 5/8" 17T SV.	SPROCKET 5/8" 17T	
9b	215150	1	KJEDEHJUL 5/8" 24T SV.	KJEDEHJUL 5/8" 24T SV.	
10a	901640	1	RULLEKJEDE 5/8"X1603	ROLLER CHAIN	
10b	901643	1	RULLEKJEDE 5/8"X1667	CHAIN 5/8"X1667	
11	901602	2	RULLEKJEDELÅS 5/8"	CONNECTING LINK 5/8"	
12	219250	1	LAGERHUS Ø55-Ø36	BEARING HOUSING Ø55-Ø36	
13	870632	1	KULELAGER 6006-2RS	BALL BEARING 6006-2RS1	
14	868430	1	LÅSERING UTV. A30X1.50	CIRCLIP A30X1.50	
15	813416	2	SEKSKANTSKRUE M8X16-8.8 ELZN	HEX. BOLT M8X16-8.8 GALV.	
15	852158	2	NYLOCKMUTTER M8 ELZN.	NYLOCK NUT M8 GALV.	
15	860158	4	BRIKKE Ø8.4-17X1.6 ELZN	WASHER Ø8.4-Ø17X1.6	
16	221519	1	KJEDEHJUL 5/8" 13T.M/LAGER	SPROCKET 13T.ASSY.	
17	255579	1	BØSSING Ø12.4X36-Ø17/3	BUSHING Ø12.4X36-Ø17/3	
18	259182	1	BØSSING Ø12.4X22-Ø17/3	BUSHING Ø12.4X22-Ø12/3	
19	215199	2	LAGERFORING Ø12.7X9-Ø20/6	BEARING LINING Ø12.7XØ20/6	
20	813700	1	SEKSKANTSKRUE M12X100-8.8 ELZN	HEX. BOLT M12X100-8.8 GALV.	
20	852162	1	NYLOCKMUTTER M12 ELZN.	NYLOCK NUT M12 GALV	
21-23	215255	1	KJEDESTRAMMER V. KOMPL.	CHAIN TENSIONER ASSY	
21	215256	1	HJULHOLDER V.	ROLLER BRACKET	
22	222726	2	TRINSE	CHAIN ROLLER	
23	813650	2	SEKSKANTSKRUE M12X50-8.8 ELZN	HEX. BOLT M12X50-8.8 GALV.	
23	852162	2	NYLOCKMUTTER M12 ELZN.	NYLOCK NUT M12 GALV	
24	215257	1	STRAMMEAKSEL	TENSION SHAFT	
25	868712	2	SPORRYTTER 12	CIRCLIP "E"-TYPE 12	
26	215269	1	STREKKFJØR Ø3-Ø17X80	TENSION SPRING Ø3-Ø17X80	
27	215288	1	STRAMMEKJETTING	TENSION CHAIN	
28	216493	1	KJEDESKJERMDEKSEL	CHAIN GUARD COVER	
29	216494	1	LASK 25X3-Ø8.5/80/Ø8.5	CLAMP 25X3-Ø8.5/80/Ø8.5	
30	813425	1	SEKSKANTSKRUE M8X25-8.8 ELZN	HEX. BOLT M8X25-8.8 GALV.	
30	860158	3	BRIKKE Ø8.4-17X1.6 ELZN	WASHER Ø8.4-Ø17X1.6	
30	850158	2	SEKSKANTMUTTER M8-8 ELZN.	HEX. NUT M8-8 GALV.	
31	216495	1	GJENGETAPP M8	THREADED BOLT M8	
32	860158	1	BRIKKE Ø8.4-17X1.6 ELZN	WASHER Ø8.4-Ø17X1.6	
32	852158	1	NYLOCKMUTTER M8 ELZN.	NYLOCK NUT M8 GALV.	
33	215101	1	LAGERHUS Ø52-Ø37	BEARING HOUSING Ø52-Ø37	
34	870727	1	KULELAGER 6205-2RS	BALL BEARING 6205-2RS	
35	813416	2	SEKSKANTSKRUE M8X16-8.8 ELZN	HEX. BOLT M8X16-8.8 GALV.	
35	852158	2	NYLOCKMUTTER M8 ELZN.	NYLOCK NUT M8 GALV.	
35	860158	4	BRIKKE Ø8.4-17X1.6 ELZN	WASHER Ø8.4-Ø17X1.6	

Kverneland

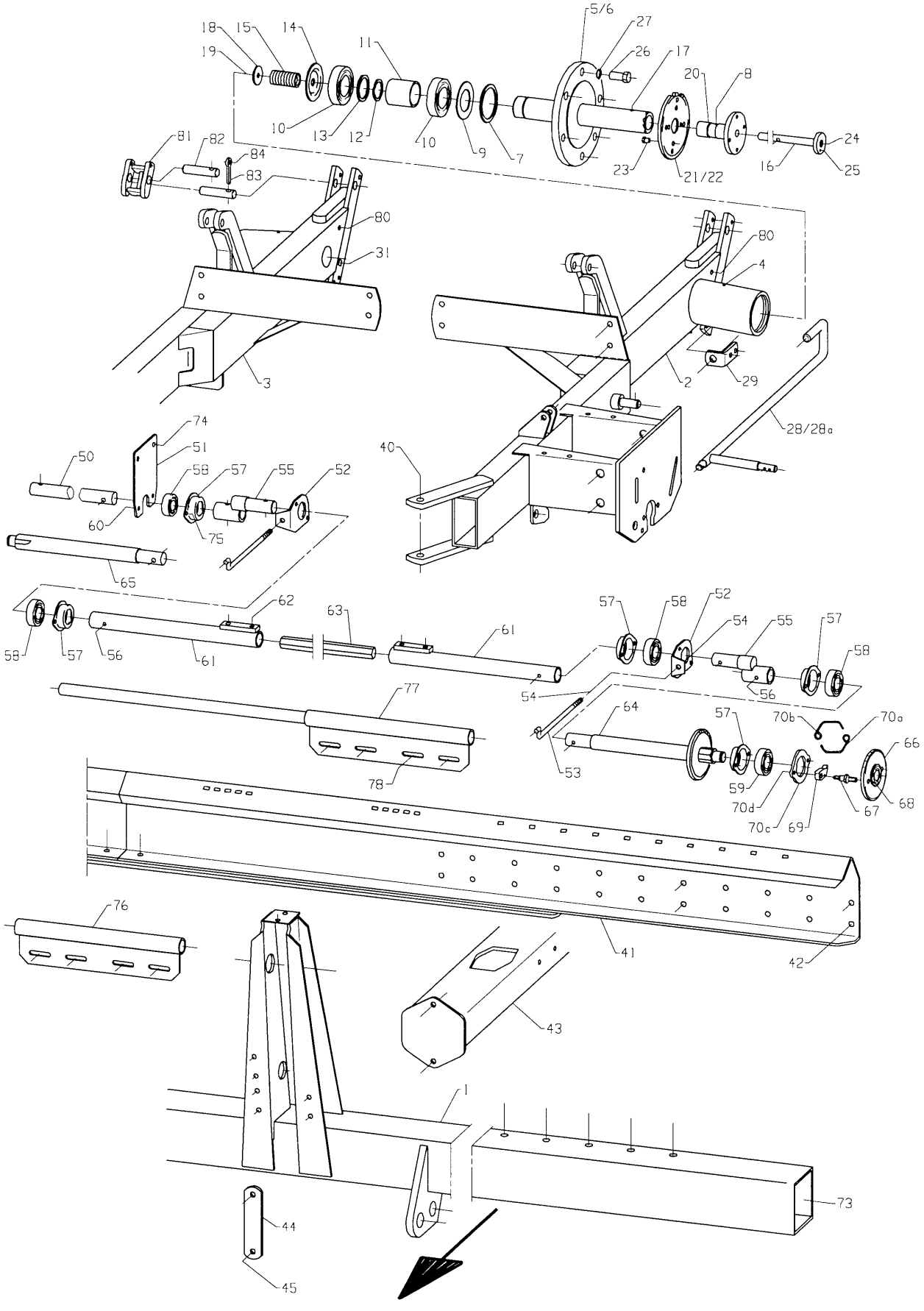

Fig. 7

Utgave: Issue:	3	Redskap: Implement:	POTETSETTER SLEPT 3200 POTATO PLANTER TRAILED 3200	Kverneland
Dato: Date:	94-11	Enhet Unit	RAMME OG MELLOMAKSEL FRAME AND INTERMEDIATE SHAFT	Fig nr.: 7

Ref. No.	Delenr. Part no.	Ant. Qty.	Gjenstand	Description	Anmerkning Note
1	217065	1	BOM SV. 70-90CM	TRIPOD BAR 70-90CM	
2-31	**217083**	**1**	**RAMMESIDE V.**	**FRAME SIDE LEFT**	
2-31	**217084**	**1**	**RAMMESIDE H.**	**FRAME SIDE RIGHT**	
2	217086	1	RAMMESIDE V.	FRAME SIDE LEFT	
3	217087	1	RAMMESIDE H.	FRAME SIDE RIGHT	
4	873540	1	SMØRENIPPEL M6 RETT	GREASE NIPPLE M6	
5	217121	1	AKSEL V.	AXLE LEFT	
6	217122	1	AKSEL H.	AXLE RIGHT	
7	868590	1	LÅSERING INNV. I 90X3	CIRCLIP I90X3	
8	873540	2	SMØRENIPPEL M6 RETT	GREASE NIPPLE M6	
9	219182	1	BRIKKE Ø52-Ø89X2	WASHER Ø52-Ø89X2	
10	870750	2	KULELAGER 6210	BALL BEARING 6210	
11	219183	1	HYLSE Ø50XØ60.3X57	SPACER Ø50XØ60.3X57	
12	868450	1	LÅSERING UTV. A50X2	CIRCLIP A50X2	
13	868610	1	STØTTERING 50X62X3	RING 50X62X3	
14	219181	1	DEKKPLATE Ø89	COVER	
15	219178	1	TRYKKFJØR Ø4-Ø29X65	TENSION SPRING Ø4-Ø29X65	
16	217127	1	KOPLINGSSTANG	CONNECTING BAR	
17	866430	1	SPENNHYLSE 8X30 ELZN	TENSION PIN 8X30X1.5	
18	219179	1	BRIKKE Ø11-Ø45X3	WASHER Ø11-Ø45X3	
19	813520	1	SEKSKANTSKRUE M10X20-8.8 GALV.	HEX. BOLT M10X20-8.8 GALV.	
20	219173	1	KJEDEHJULBOSS	SPROCKET HUB	
21	219172	1	KJEDEHJUL 5/8" 30T M/TANN V.	SPROCKET 5/8" 30T LEFT	
22	219175	1	KJEDEHJUL 5/8" 30T M/TANN H.	SPROCKET 5/8" 30T RIGHT	
23	813420	4	SEKSKANTSKRUE M8X20-8.8 GALV.	HEX. BOLT M8X20-8.8 GALV	
24	813520	1	SEKSKANTSKRUE M10X20-8.8 GALV.	HEX. BOLT M10X20-8.8 GALV.	
25	873540	1	SMØRENIPPEL M6 RETT	GREASE NIPPLE M6	
26	401044	6	NAVBOLT	HUB	
27	401045	6	FJØRSKIVE M.KULEFLATE 18MM	CONE SPRING WASHER	
28	217117	1	KOPLINGSAKSEL V.	CONNECTING BAR LEFT	
28a	217118	1	KOPLINGSAKSEL H.	CONNECTING BAR RIGHT	
29	217114	1	LAGERØRE	CLAMP	
30	813525	2	SEKSKANTSKRUE M10X25-8.8 GALV.	HEX. BOLT M10X25-8.8 GALV.	
30	860160	2	BRIKKE Ø10.5-Ø21X2	WASHER Ø10.5-Ø21X2	
31	821570	1	LÅSESKRUE M10X70-4.6 GALV.	CARRIAGE BOLT M10X70-4.6 GALV.	
31	860160	1	BRIKKE Ø10.5-Ø21X2	WASHER Ø10.5-Ø21X2	
31	852160	1	NYLOCKMUTTER M10 GALV	NYLOCK NUT M10 GALV.	
40	813908	2	SEKSKANTSKR.M16X180-8.8 V.GALV	HEX. BOLT M16X180-8.8 GALV.	
40	860166	2	BRIKKE Ø17-Ø30X3	WASHER Ø17-Ø30X3	
40	852166	2	NYLOCKMUTTER M16 GALV	NYLOCK NUT M16 GALV	
41	217075	1	SKINNE	BAR	
42	813640	8	SEKSKANTSKRUE M12X40-8.8 GALV.	HEX. BOLT M12X40-8.8 GALV	
42	860163	8	BRIKKE Ø13-Ø24X2.5	WASHER Ø13-Ø24X2.5	
42	852162	8	NYLOCKMUTTER M12 GALV	NYLOCK NUT M12 GALV	
43	217180	1	AVSTIVER	REINFORCEMENT	
44	215295	1	LASK 40X8-Ø13/133/Ø13	CLAMP 40X8-Ø13/133/Ø13	
45	813706	2	SEKSKANTSKRUE M12X160-8.8 GALV	HEX. BOLT M12X160-8.8	
45	860163	2	BRIKKE Ø13-Ø24X2.5	WASHER Ø13-Ø24X2.5	
45	852162	2	NYLOCKMUTTER M12 GALV	NYLOCK NUT M12 GALV	
			MELLOMAKSEL	**INTERMEDIATE SHAFT**	
50	217175	1	BOLT Ø30-Ø8/226/Ø8	BOLT	
51	217177	2	LAGERFESTE	BRACKET	
52	217187	4	LAGERFESTE	BRACKET	
53	217189	4	STAG	STAY	
54	850160	4	SEKSKANTMUTTER M10-8 GALV.	HEX. NUT M10-8 GALV.	
54	860160	8	BRIKKE Ø10.5-Ø21X2	WASHER Ø10.5-Ø21X2	
54	852160	4	NYLOCKMUTTER M10 GALV	NYLOCK NUT M10 GALV.	
55	217185	4	EKSENTERTAPP	ECCENTRIC PIN	
56	866540	8	SPENNHYLSE 10X40	LOCK PIN 10X40	

Kverneland

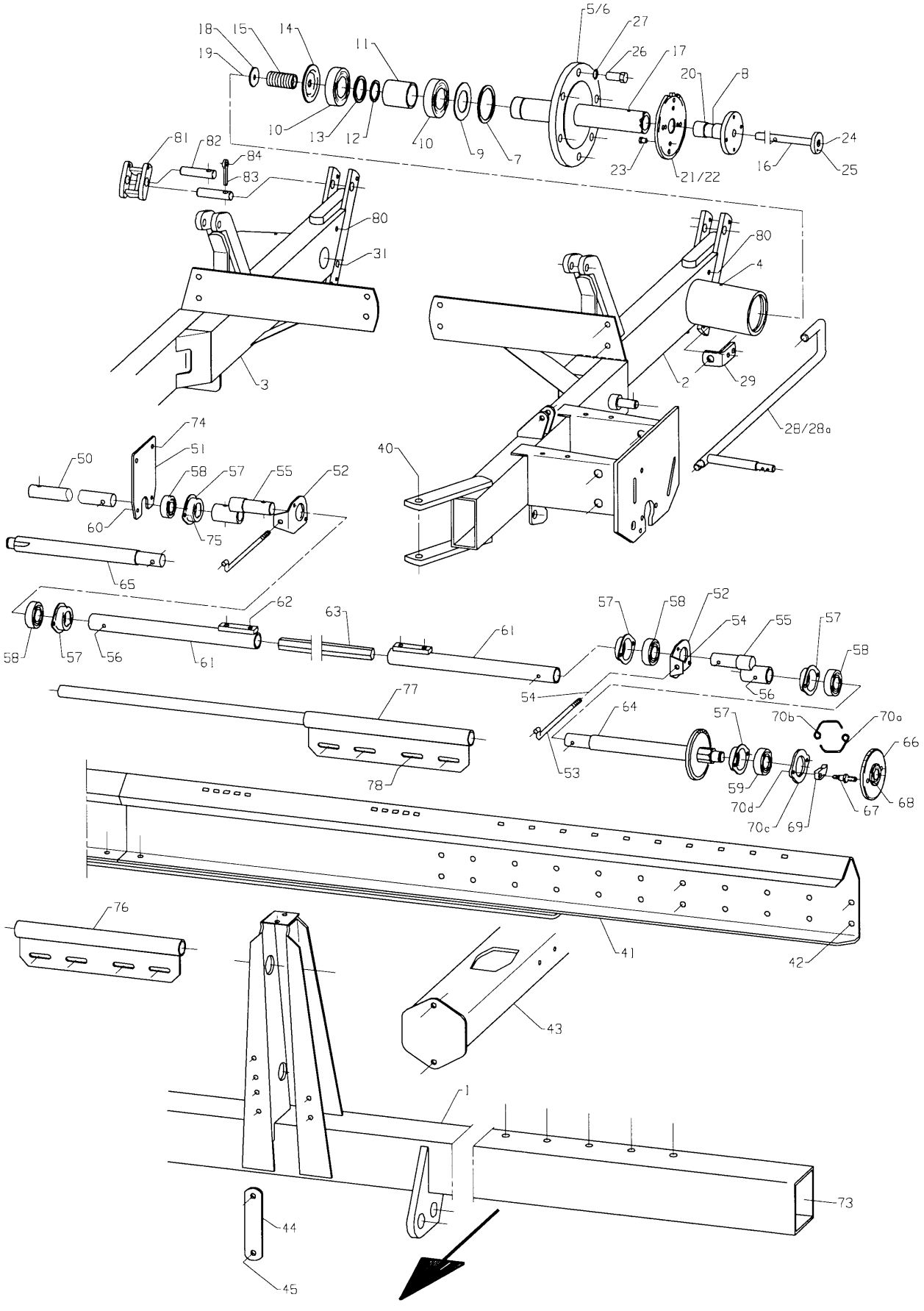

Fig. 7

Utgave: / Issue:	3	Redskap: / Implement:	POTETSETTER SLEPT 3200 POTATO PLANTER TRAILED 3200	Kverneland
Dato: / Date:	94-11	Enhet / Unit	RAMME OG MELLOMAKSEL FRAME AND INTERMEDIATE SHAFT	Fig nr.: 7

Ref. No.	Delenr. Part no.	Ant. Qty.	Gjenstand	Description	Anmerkning Note
57	215102	10	LAGERHUS Ø62-Ø47	BEARING HOUSING Ø62-Ø47	
58	870732	8	KULELAGER 6206-2RS	BALL BEARING 6206-2RS	
59	870637	2	KULELAGER 6007-2RS M/GUMMISIDE	BALL BEARING 6007-2RS1	
60	813420	12	SEKSKANTSKRUE M8X20-8.8 GALV.	HEX. BOLT M8X20-8.8 GALV	
60	860158	12	BRIKKE Ø8.4-Ø17X1.6	WASHER Ø8.4-Ø17X1.6	
60	852158	12	NYLOCKMUTTER M8 GALV	NYLOCK NUT M8 GALV.	
61	217170	4	MELLOMAKSELHYLSE SV.	INTERMEDIATE SHAFT CASING	
62	831716	8	GJENGESTIFT 6KT-HOL M16X16	HEADLESS SCREW	
63	217173	2	AKSEL	SHAFT	
64a	217154	1	DRIVMELLOMAKSEL V.SV. 24T	DRIVE INTERMEDIATE SHAFT L.24T	
64b	217155	1	DRIVMELLOMAKSEL V.	DRIVE INTERMEDIATE SHAFT L.	-94 MOD.
65	217152	1	DRIVMELLOMAKSEL H.	DRIVE INTERMEDIATE SHAFT R.	
66-70	**218000**	**1**	**PALHJUL M/LAGER VENSTRE**	**PAWL WHEEL W/BEARING LEFT**	
66-70	**218001**	**1**	**PALHJUL M/LAGER HØGRE**	**PAWL WHEEL W/BEARING RIGHT**	
66	218003	2	KJEDEHJUL M/LAGER 5/8" 23T Ø25	SPROCKET W/BEARING 5/8" 23T	
67	218007	2	PALAKSEL M10-Ø13	PAWL AXLE	
68	852160	4	NYLOCKMUTTER M10 ELZN.	NYLOCK NUT M10 GALV.	
69	218005	4	PAL	PAWL	
70a	217166	2	PALFJØR V.	PAWL SPRING	
70b	217167	2	PALFJØR H.	PAWL SPRING RIGHT	
70c	218008	2	STØTTERING	SUPPORT RING	
70d	850158	4	SEKSKANTMUTTER M8-8 ELZN.	HEX. NUT M8-8 GALV.	
71	868605	2	STØTTERING 25X35X2	SUPPORT RING 25X35X2.0	
72	868425	2	LÅSERING UTV. A25X1.20	CIRCLIP A25X1.20	
73	911301	2	ENDEPLUGG 120X120X6(5)	PLUG	
74	813525	4	SEKSKANTSKRUE M10X25-8.8 GALV.	HEX. BOLT M10X25-8.8 GALV.	
74	860160	4	BRIKKE Ø10.5-Ø21X2	WASHER Ø10.5-Ø21X2	
74	852160	4	NYLOCKMUTTER M10 GALV	NYLOCK NUT M10 GALV.	
75	813425	8	SEKSKANTSKRUE M8X25-8.8 GALV.	HEX. BOLT M8X25-8.8 GALV.	
75	860158	8	BRIKKE Ø8.4-Ø17X1.6	WASHER Ø8.4-Ø17X1.6	
75	852158	8	NYLOCKMUTTER M8 GALV	NYLOCK NUT M8 GALV.	
76	217301	1	STØTTEHYLSE KORT SV.	SUPPORT COLLAR SHORT	
77	217302	3	STØTTEHYLSE LANG SV.	SUPPORT COLLAR LONG	
78	813530	8	SEKSKANTSKRUE M10X30-8.8 GALV.	HEX. BOLT M10X30-8.8 GALV.	
78	860160	16	BRIKKE Ø10.5-Ø21X2	WASHER Ø10.5-Ø21X2	
78	852160	8	NYLOCKMUTTER M10 GALV	NYLOCK NUT M10 GALV.	
80	821470	2	LÅSESKRUE M8X70-4.6 ELZN.	CARRIAGE BOLT M8X70-4.6 GALV.	
80	860158	2	BRIKKE Ø8.4-17X1.6 ELZN	WASHER Ø8.4-Ø17X1.6	
80	850158	2	SEKSKANTMUTTER M8-8 ELZN.	HEX. NUT M8-8 GALV.	
81	217380	2	SYLINDERFESTE SV.	CYLINDER BRACKET	
82	217385	2	AKSEL Ø20X78-Ø12/14	AXLE	
83	243077	2	LÅSEPINNE	LOCKING PIN	
84	813425	2	SEKSKANTSKRUE M8X25-8.8 ELZN	HEX. BOLT M8X25-8.8 GALV.	
84	852158	2	NYLOCKMUTTER M8 ELZN.	NYLOCK NUT M8 GALV.	

Kverneland

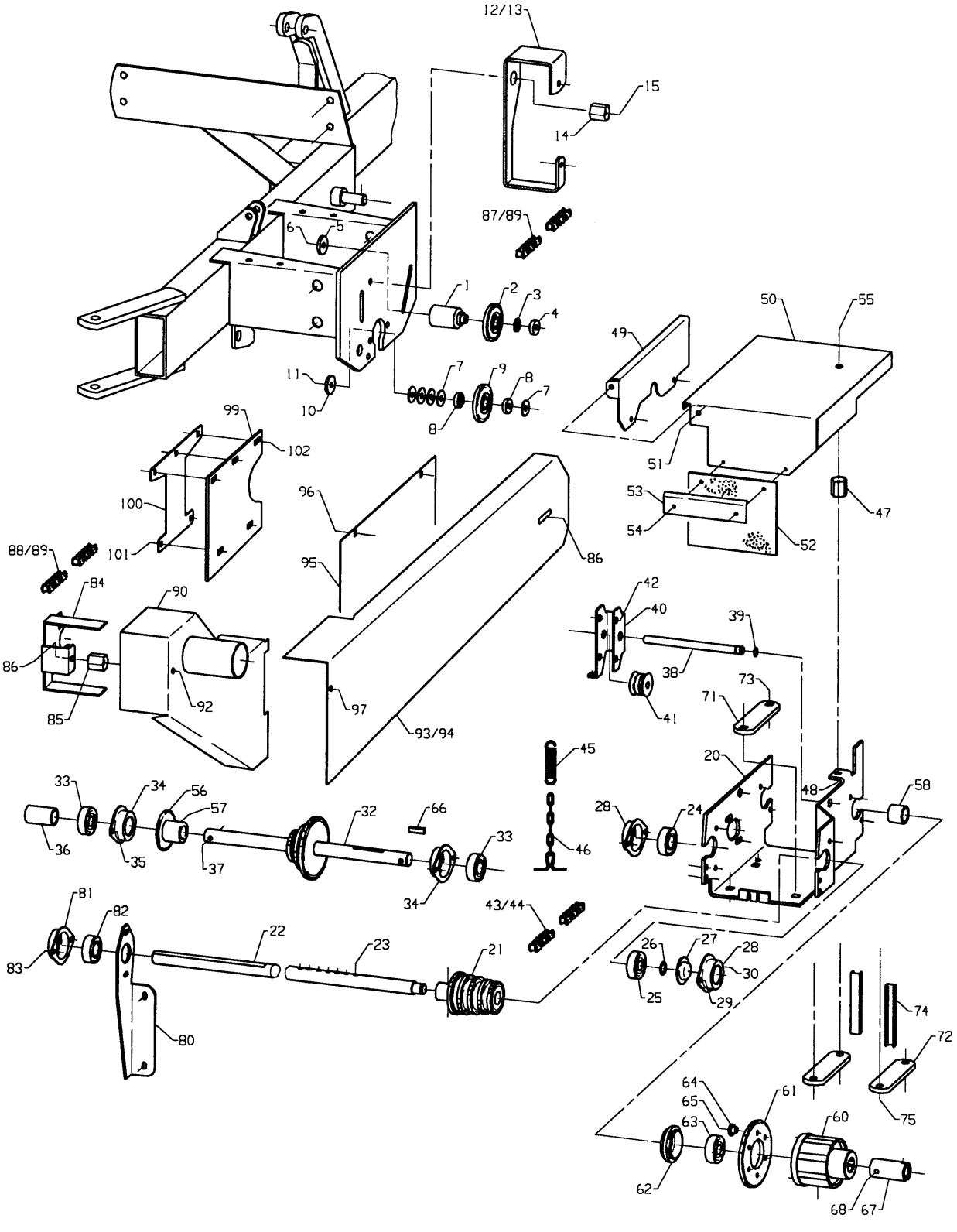

Fig. 8

Utgave: / Issue: 3	Redskap: / Implement: POTETSETTER SLEPT 3200 / POTATO PLANTER TRAILED 3200	Kverneland
Dato: / Date: 94-11	Enhet / Unit: SETTETRANSMISJON / MAIN DRIVE	Fig nr.: 8

Ref. No.	Delenr. Part no.	Ant. Qty.	Gjenstand	Description	Anmerkning Note
			SETTERTRANSMISJON	**SAFETY COUPLING**	
1	217195	2	BØSSING Ø10.5X63-Ø17/8	BUSHING	
2	221519	2	KJEDEHJUL 5/8" 13T.M/LAGER	SPROCKET 13T.ASSY.	
3	217198	4	BRIKKE Ø17-Ø25X2 GALV	WASHER	
4	311542	2	BØSSING Ø10.4X10-Ø16.8/3.4	BUSHING Ø10.4X10-Ø16.8/3.4	
5	311983	2	BRIKKE Ø11-Ø35X5	WASHER Ø11-Ø35X5	
6	813601	2	SEKSKANTSKRUE M10X110-8.8 ELZN	HEX. BOLT M10X110-8.8 ELZN	
6	852160	2	NYLOCKMUTTER M10 ELZN.	NYLOCK NUT M10 GALV.	
7	217197	5	BRIKKE Ø10.5-Ø30X2 GALV	WASHER	
8	311542	2	BØSSING Ø10.4X10-Ø16.8/3.4	BUSHING Ø10.4X10-Ø16.8/3.4	
9	221519	1	KJEDEHJUL 5/8" 13T.M/LAGER	SPROCKET 13T.ASSY.	
10	311983	1	BRIKKE Ø11-Ø35X5	WASHER Ø11-Ø35X5	
11	813560	1	SEKSKANTSKRUE M10X60-8.8 ELZN	HEX. BOLT M10X60-8.8 GALV.	
11	852160	1	NYLOCKMUTTER M10 ELZN.	NYLOCK NUT M10 GALV.	
12	217502	1	SKJERMFESTE V.	GUARD BRACKET LEFT	
13	217503	1	SKJERMFESTE H.	GUARD BRACKET RIGHT	
14	256571	2	MUTTER	NUT	
15	813525	2	SEKSKANTSKRUE M10X25-8.8 ELZN	HEX. BOLT M10X25-8.8 GALV.	
15	860160	2	BRIKKE Ø10.5-Ø21X2 ELZN	WASHER Ø10.5-Ø21X2	
20-68	**217440**	**1**	**GEARKASSE M/SIKKERHETSKOPL.KPL**	**GEAR BOX W/SAFETY COUPLING A.**	
20	215253	1	GEARKASSE	GEAR BOX	
21	215261	1	KJEDEHJUL 5/8" 11-12-13-14-15T	SPROCKET 5/8" 11-12-13-14-15T	
22	215271	1	DRIVAKSEL UTGÅENDE	DRIVE SHAFT OUT.	
23	867081	1	RØRPINNE Ø8X36XØ34	PIN Ø8X36XØ34	
24	870727	1	KULELAGER 6205-2RS	BALL BEARING 6205-2RS	
25	870822	1	KULELAGER 6304-2RS	BALL BEARING 6304-2RS1	
26	868420	1	LÅSERING UTV. A20X1.2	CIRCLIP A20X1.2	
27	281633	1	DEKSEL Ø52	COVER	
28	215101	2	LAGERHUS Ø52-Ø37	BEARING HOUSING Ø52-Ø37	
29	813420	3	SEKSKANTSKRUE M8X20-8.8 ELZN	HEX. BOLT M8X20-8.8 GALV	
29	852158	3	NYLOCKMUTTER M8 ELZN.	NYLOCK NUT M8 GALV.	
29	850158	3	SEKSKANTMUTTER M8-8 ELZN.	HEX. NUT M8-8 GALV.	
30	827220	1	SENKSKRUE M/6KT.HOL M8X20	INHEX COUNTERSUNK SCREW M8X20	
30	852158	1	NYLOCKMUTTER M8 ELZN.	NYLOCK NUT M8 GALV.	
30	860158	2	BRIKKE Ø8.4-17X1.6 ELZN	WASHER Ø8.4-Ø17X1.6	
31	813425	2	SEKSKANTSKRUE M8X25-8.8 ELZN	HEX. BOLT M8X25-8.8 GALV.	
31	850158	2	SEKSKANTMUTTER M8-8 ELZN.	HEX. NUT M8-8 GALV.	
32	217442	1	DRIVAKSEL LANG 5/8" 11-16-23T	DRIVE SHAFT 5/8" 11-16-23T	
33	870727	2	KULELAGER 6205-2RS	BALL BEARING 6205-2RS	
34	215101	2	LAGERHUS Ø52-Ø37	BEARING HOUSING Ø52-Ø37	
35	813420	4	SEKSKANTSKRUE M8X20-8.8 ELZN	HEX. BOLT M8X20-8.8 GALV	
35	852158	4	NYLOCKMUTTER M8 ELZN.	NYLOCK NUT M8 GALV.	
35	860158	8	BRIKKE Ø8.4-17X1.6 ELZN	WASHER Ø8.4-Ø17X1.6	
36	402556	1	HYLSE Ø25.5-Ø33.7X50	SPACER Ø25.5-Ø33.7X50	
37	866436	1	SPENNHYLSE 8X36	TENSION PIN 8X36X1,5	
38	215258	1	STRAMMEAKSEL	TENSION SHAFT	
39	868712	2	SPORRYTTER 12	CIRCLIP "E"-TYPE 12	
40-42	**215255**	**1**	**KJEDESTRAMMER V. KOMPL.**	**CHAIN TENSIONER ASSY**	
40	215256	1	HJULHOLDER V.	ROLLER BRACKET	
41	222726	2	TRINSE	CHAIN ROLLER	
42	813650	2	SEKSKANTSKRUE M12X50-8.8 ELZN	HEX. BOLT M12X50-8.8 GALV.	
42	852162	2	NYLOCKMUTTER M12 ELZN.	NYLOCK NUT M12 GALV	
43	901633	1	RULLEKJEDE 5/8"X905	ROLLER CHAIN 5/8"X905	
44	901602	1	RULLEKJEDELÅS 5/8"	CONNECTING LINK 5/8"	
45	215269	1	STREKKFJØR Ø3-Ø17X80	TENSION SPRING Ø3-Ø17X80	
46	215260	1	STRAMMEKJETTING	TENSION CHAIN	
47	256571	1	MUTTER	NUT	

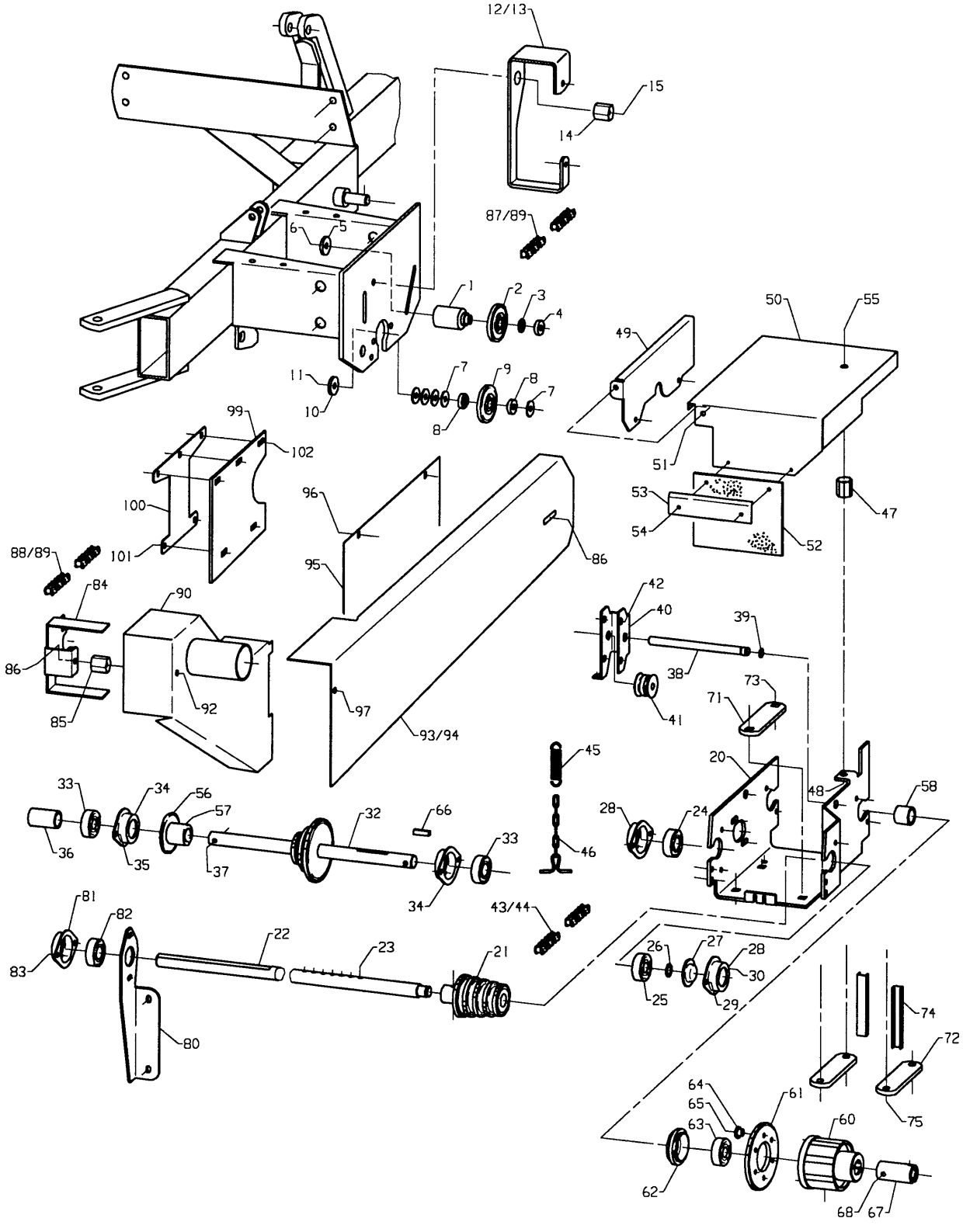
12/13
15
14
87/89
6
5
1
2
3
4
11
10
7
9
8
7
8
99
102
100
101
88/89
84
90
86
85
92
96
95
97
93/94
86
50
55
49
51
53
54
52
47
42
40
39
38
41
73
71
45
46
20
48
58
28
24
33
34
56
57
36
35
37
32
66
33
34
81
82
83
22
23
21
80
43/44
26
27
28
30
25
29
74
72
75
64
65
63
61
60
62
68
67

Fig. 8

Utgave: / Issue: 3	Redskap: / Implement: POTETSETTER SLEPT 3200 / POTATO PLANTER TRAILED 3200	Kverneland
Dato: / Date: 94-11	Enhet / Unit: SETTETRANSMISJON / MAIN DRIVE	Fig nr.: 8

Ref. No.	Delenr. Part no.	Ant. Qty.	Gjenstand	Description	Anmerkning Note
48	813520	1	SEKSKANTSKRUE M10X20-8.8 ELZN	HEX. BOLT M10X20-8.8 GALV.	
49	215298	1	FESTEPLATE	PLATE	
50	215297	1	GEARKASSEDEKSEL	COVER	
51	813425	2	SEKSKANTSKRUE M8X25-8.8 ELZN	HEX. BOLT M8X25-8.8 GALV.	
51	850158	2	SEKSKANTMUTTER M8-8 ELZN.	HEX. NUT M8-8 GALV.	
52	215280	1	GUMMISKJERM	RUBBER GUARD	
53	215279	1	KLEMLIST	RETAINER	
54	862058	2	POPPNAGLE Ø4.8X14.5 ALUMINIUM	POP NAIL Ø4.8X14.5 ALU.	
55	855380	1	STJERNERATT M10	HANDWHEEL M10	
55	813540	1	SEKSKANTSKRUE M10X40-8.8 ELZN	HEX. BOLT M10X40-8.8 GALV.	
55	852160	1	NYLOCKMUTTER M10 ELZN.	NYLOCK NUT M10 GALV.	
56	216020	1	KJEDEHJUL 1/2" 18T SV.	SPROCKET 1/2" 18T	
57	831616	1	GJENGESTIFT 6KT.HOL M12X16	HEADLESS SCREW M12X16	
58	217449	1	HYLSE Ø25.7-Ø33.7X19	SPACER Ø25.7-Ø33.7X19	
60-65	**217444**	**1**	**SIKKERHETSKOPLING EK32B KOMPL.**	**SAFETY COUPLING EK32B ASSY**	
60	700029	1	SIKKERHETSKOPLING EK32B	SAFETY COUPLING EK32B	
60a	700334	1	HUS	HOUSING	W.S 55.20.192
60b	700335	1	NAV	HUB	W.S 55.14.197
60c	700081	12	TAPP	CLUTCH TAP	W.S. 55.01.07
60d	700126	12	FJØR, YTRE	OUTER SPRING	W.S. 66.01.04
60e	700128	12	FJØR, INDRE	INNER SPRING	W.S. 66.01.05
60f	700095	1	TETNINGSRING	SEALING RING	W.S. 55.17.12
60g	700089	1	TRYKKRING	PRESSURE RING	W.S. 55.15.10
60h	868580	1	LÅSERING INNV. I 80X2.5	CIRCLIP I80X2.50	W.S. 62.15.00
60i	700107	1	SMØRENIPPEL	GREASE NIPPLE	W.S. 63.15.05
61	217448	1	KJEDEHJUL 5/8" 24T-Ø57 M/6HOL	SPROCKET 5/8" 24T-Ø57	
62	217445	1	LAGERHUS Ø52	BEARING HOUSING Ø52	
63	870727	1	KULELAGER 6205-2RS	BALL BEARING 6205-2RS	
64	310912	6	BØSSING Ø8.4X10-Ø13.8/7	BUSHING Ø8.4X10-Ø13.8/7	
65	813425	6	SEKSKANTSKRUE M8X25-8.8 ELZN	HEX. BOLT M8X25-8.8 GALV.	
65a	831516	1	GJENGESTIFT 6KT HOL M10X16	HEADLESS SCREW M10X16	
66	231231	1	KILE 8 X 7 X 30	KEY 8 X 7 X 30	
67	217447	1	SVEIVHYLSE Ø20.5/Ø25X65	SPACER Ø20.5/Ø25X65	
68	813445	1	SEKSKANTSKRUE M8X45-8.8 ELZN	HEX. BOLT M8X45-8.8 GALV.	
68	852158	1	NYLOCKMUTTER M8 ELZN.	NYLOCK NUT M8 GALV.	
71	215296	1	LASK 40X8-4KT13/133/4KT13	CLAMP	
72	215295	2	LASK 40X8-Ø13/133/Ø13	CLAMP 40X8-Ø13/133/Ø13	
73	821706	4	LÅSESKRUE M12X160-4.6 ELZN.	CARRIAGE BOLT M12X160-4.6 GALV	
74	217505	2	DISTANSEPROFIL	DISTANCE PROFILE	
75	852162	4	NYLOCKMUTTER M12 ELZN.	NYLOCK NUT M12 GALV	
80-83	**217454**	**1**	**LAGERSTØTTE KOMPL.**	**BEARING BRACKET ASSY**	
80	217455	1	LAGERSTØTTE	BEARING BRACKET	
81	215101	1	LAGERHUS Ø52-Ø37	BEARING HOUSING Ø52-Ø37	
82	870727	1	KULELAGER 6205-2RS	BALL BEARING 6205-2RS	
83	813420	2	SEKSKANTSKRUE M8X20-8.8 ELZN	HEX. BOLT M8X20-8.8 GALV	
83	860158	4	BRIKKE Ø8.4-17X1.6 ELZN	WASHER Ø8.4-Ø17X1.6	
83	852158	2	NYLOCKMUTTER M8 ELZN.	NYLOCK NUT M8 GALV.	
84	217501	1	SKJERMFESTE	GUARD BRACKET	
85	256571	1	MUTTER	NUT	
86	813520	1	SEKSKANTSKRUE M10X20-8.8 ELZN	HEX. BOLT M10X20-8.8 GALV.	
86	860160	1	BRIKKE Ø10.5-Ø21X2 ELZN	WASHER Ø10.5-Ø21X2	
87	901664	2	RULLEKJEDE 5/8"X2556	ROLLER CHAIN 5/8X2651	
88	901662	1	RULLEKJEDE 5/8"X1413	ROLLER CHAIN 5/8X1413	
89	901602	3	RULLEKJEDELÅS 5/8"	CONNECTING LINK 5/8"	
90	217506	1	KJEDESKJERM FRAMRE SV.	CHAIN GUARD FRONT	
91	911270	1	ENDEPLUGG Ø70	PLUG Ø70	
92	855380	1	STJERNERATT M10	HANDWHEEL M10	

Kverneland

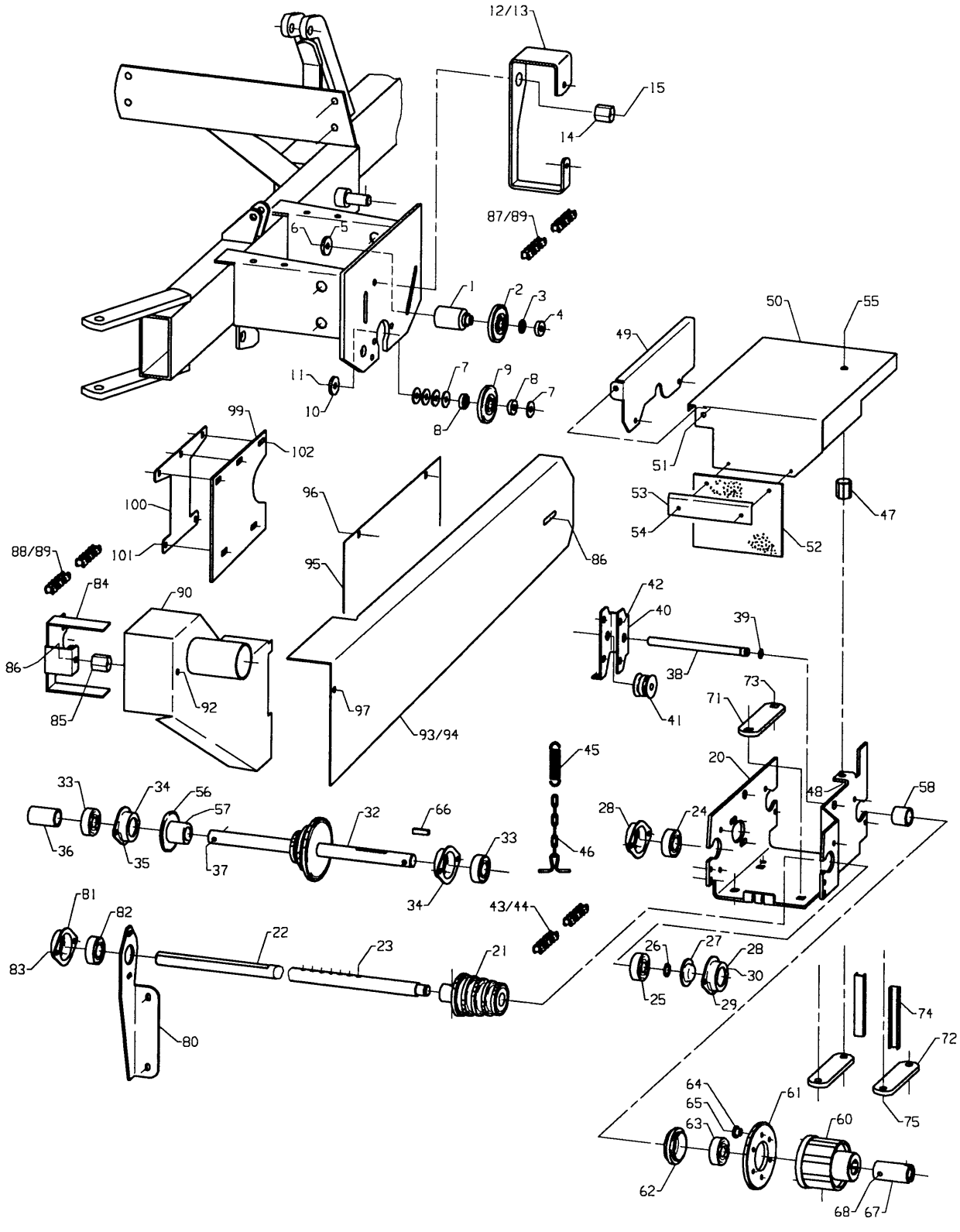

Fig. 8

Utgave: / Issue: 3	Redskap: / Implement: POTETSETTER SLEPT 3200 / POTATO PLANTER TRAILED 3200	Kverneland
Dato: / Date: 94-11	Enhet / Unit: SETTETRANSMISJON / MAIN DRIVE	Fig nr.: 8

Ref. No.	Delenr. Part no.	Ant. Qty.	Gjenstand	Description	Anmerkning Note
92	813540	1	SEKSKANTSKRUE M10X40-8.8 ELZN	HEX. BOLT M10X40-8.8 GALV.	
92	860160	2	BRIKKE Ø10.5-Ø21X2 ELZN	WASHER Ø10.5-Ø21X2	
92	852160	1	NYLOCKMUTTER M10 ELZN.	NYLOCK NUT M10 GALV.	
93	217511	1	KJEDESKJERM BAKRE VENSTRE	REAR CHAIN GUARD LEFT	
94	217512	1	KJEDESKJERM BAKRE HØGRE	REAR CHAIN GUARD RIGHT	
95	217513	2	KJEDESKJERM INDRE	INNER CHAIN GUARD	
96	821520	4	LÅSESKRUE M10X20-4.6 ELZN.	CARRIAGE BOLT M10X20-4.6 GALV	
96	231500	4	BRIKKE Ø13.5-Ø25X5	WASHER Ø13.5-Ø25X5	
96	852160	4	NYLOCKMUTTER M10 ELZN.	NYLOCK NUT M10 GALV.	
97	855380	2	STJERNERATT M10	HANDWHEEL M10	
97	813580	2	SEKSKANTSKRUE M10X80-8.8 ELZN	HEX. BOLT M10X80-8.8 GALV.	
97	860160	2	BRIKKE Ø10.5-Ø21X2 ELZN	WASHER Ø10.5-Ø21X2	
97	852160	2	NYLOCKMUTTER M10 ELZN.	NYLOCK NUT M10 GALV.	
98	813520	2	SEKSKANTSKRUE M10X20-8.8 ELZN	HEX. BOLT M10X20-8.8 GALV.	
98	860160	2	BRIKKE Ø10.5-Ø21X2 ELZN	WASHER Ø10.5-Ø21X2	
99	217507	2	GUMMISKJERM	RUBBER GUARD	
100	217508	2	KLEMLIST	CLAMP	
101	821416	4	LÅSESKRUE M8X16-4.6 ELZN.	CARRIAGE BOLT M8X16-4.6 GALV.	
101	301759	4	BRIKKE Ø9-Ø35X2	WASHER Ø9-Ø35X2	
102	821420	6	LÅSESKRUE M8X20-4.6 ELZN.	CARRIAGE BOLT M8X20-4.6 GALV.	
102	860158	6	BRIKKE Ø8.4-17X1.6 ELZN	WASHER Ø8.4-Ø17X1.6	
103	852158	10	NYLOCKMUTTER M8 ELZN.	NYLOCK NUT M8 GALV.	

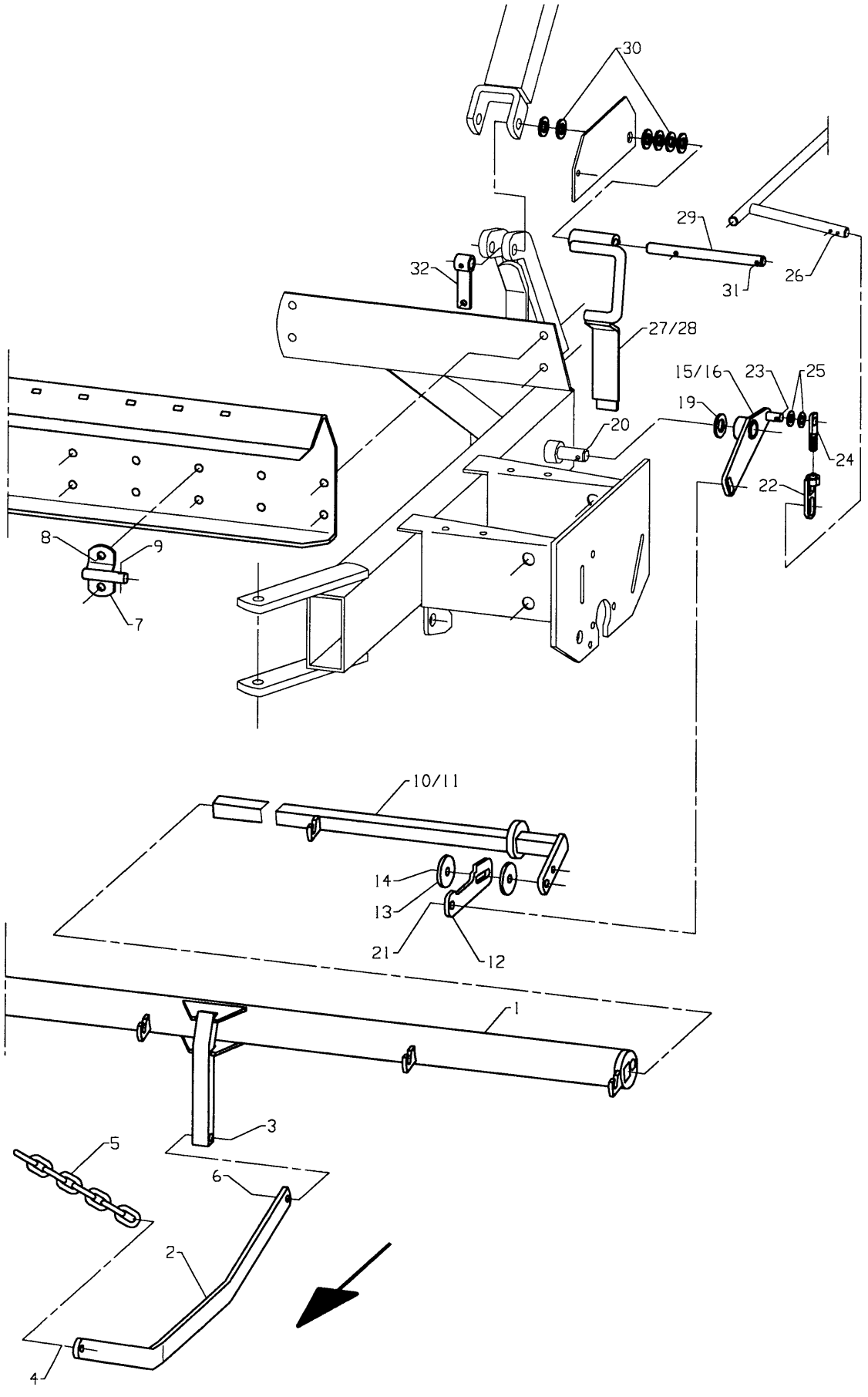
30
29
31
26
32
27/28
15/16
23
25
19
20
24
22
8
9
7
10/11
14
13
21
12
1
3
5
6
2
4

Fig. 9

Utgave: / Issue: 3	Redskap: / Implement: POTETSETTER SLEPT 3200 / POTATO PLANTER TRAILED 3200	Kverneland
Dato: / Date: 94-11	Enhet / Unit LØFTEUTSTYR / LIFTING EQUIPMENT	Fig nr.: 9

Ref. No.	Delenr. Part no.	Ant. Qty.	Gjenstand	Description	Anmerkning Note
			LØFTEUTSTYR	**LIFTING EQUIPMENT**	
1	217495	1	LØFTEAKSEL	LIFT SHAFT	
2	217521	1	STREKKSTAG	STRETCHING STAY	
3	813645	1	SEKSKANTSKRUE M12X45-8.8 GALV.	HEX. BOLT M12X45-8.8 GALV	
3	850162	1	SEKSKANTMUTTER M12-8 GALV	HEX. NUT M12-8 GALV.	
4	813540	1	SEKSKANTSKRUE M10X40-8.8 GALV.	HEX. BOLT M10X40-8.8 GALV.	
4	850160	1	SEKSKANTMUTTER M10-8 GALV.	HEX. NUT M10-8 GALV.	
4	852160	1	NYLOCKMUTTER M10 GALV	NYLOCK NUT M10 GALV.	
5	217527	1	STREKK-KJETTING	STRETCHING CHAIN	
6	852160	1	NYLOCKMUTTER M10 GALV	NYLOCK NUT M10 GALV.	
7	219321	4	HENGSLE	HINGE	
8	813630	4	SEKSKANTSKRUE M12X30-8.8 GALV.	HEX. BOLT M12X30-8.8 GALV.	
8	860163	4	BRIKKE Ø13-Ø24X2.5	WASHER Ø13-Ø24X2.5	
8	852162	4	NYLOCKMUTTER M12 GALV	NYLOCK NUT M12 GALV	
9	865325	2	SPLINT 6.3X25 GALV.	SPLIT PIN 6,3 X 25	
10	217518	1	AKSELFORLENGER V.	LEFT SHAFT EXTENSIONER	
11	217519	1	AKSELFORLENGER H.	RIGHT SHAFT EXTENSIONER	
12	217538	2	KOPLINGSLENKE	COUPLING LINK	-204
13	219342	4	BRIKKE Ø13-Ø50.5X5	WASHER Ø13-Ø50.5X5	-204
14	813650	2	SEKSKANTSKRUE M12X50-8.8 GALV.	HEX. BOLT M12X50-8.8 GALV.	
14	850162	2	SEKSKANTMUTTER M12-8 GALV	HEX. NUT M12-8 GALV.	
14	860163	2	BRIKKE Ø13-Ø24X2.5	WASHER Ø13-Ø24X2.5	
14	852162	2	NYLOCKMUTTER M12 GALV	NYLOCK NUT M12 GALV	
15	217545	1	VIPPEARM VENSTRE SV.	LEFT LEVER ARM	-204
16	217546	1	VIPPEARM HØGRE	RIGHT LEVER ARM	-204
17	860170	2	BRIKKE Ø21-Ø37X3	WASHER Ø21-Ø37X3	
19	860170	2	BRIKKE Ø21-Ø37X3	WASHER Ø21-Ø37X3	
20	865325	2	SPLINT 6.3X25 GALV.	SPLIT PIN 6,3 X 25	
21	813645	2	SEKSKANTSKRUE M12X45-8.8 GALV.	HEX. BOLT M12X45-8.8 GALV	
21	850162	2	SEKSKANTMUTTER M12-8 GALV	HEX. NUT M12-8 GALV.	
21	860163	6	BRIKKE Ø13-Ø24X2.5	WASHER Ø13-Ø24X2.5	
21	852162	2	NYLOCKMUTTER M12 GALV	NYLOCK NUT M12 GALV	
22	217540	2	DRIVKOPLINGSLENKE.	DRIVE COUPLING LINK	-204
23	867014	4	FJØRPINNE Ø4.0X75 ELZN	SPRING PIN Ø4.0X75 GALV	
24	217542	2	STILLSKRUE M12X50	ADJUSTING SCREW	-204
25	860163	4	BRIKKE Ø13-Ø24X2.5	WASHER Ø13-Ø24X2.5	
26	867014	2	FJØRPINNE Ø4.0X75 ELZN	SPRING PIN Ø4.0X75 GALV	
27	217459	1	LÅSEARM V.	LEFT SECURING ARM	-204
28	217460	1	LÅSEARM H.	RIGHT SECURING ARM	-204
29	217465	2	BOLT Ø16-Ø6.4/168/Ø6.4	BOLT	
30	860166	8	BRIKKE Ø17-Ø30X3	WASHER Ø17-Ø30X3	
31	865325	4	SPLINT 6.3X25 GALV.	SPLIT PIN 6,3 X 25	
32	217467	1	BOLTFESTE	PIN ANCHOR	

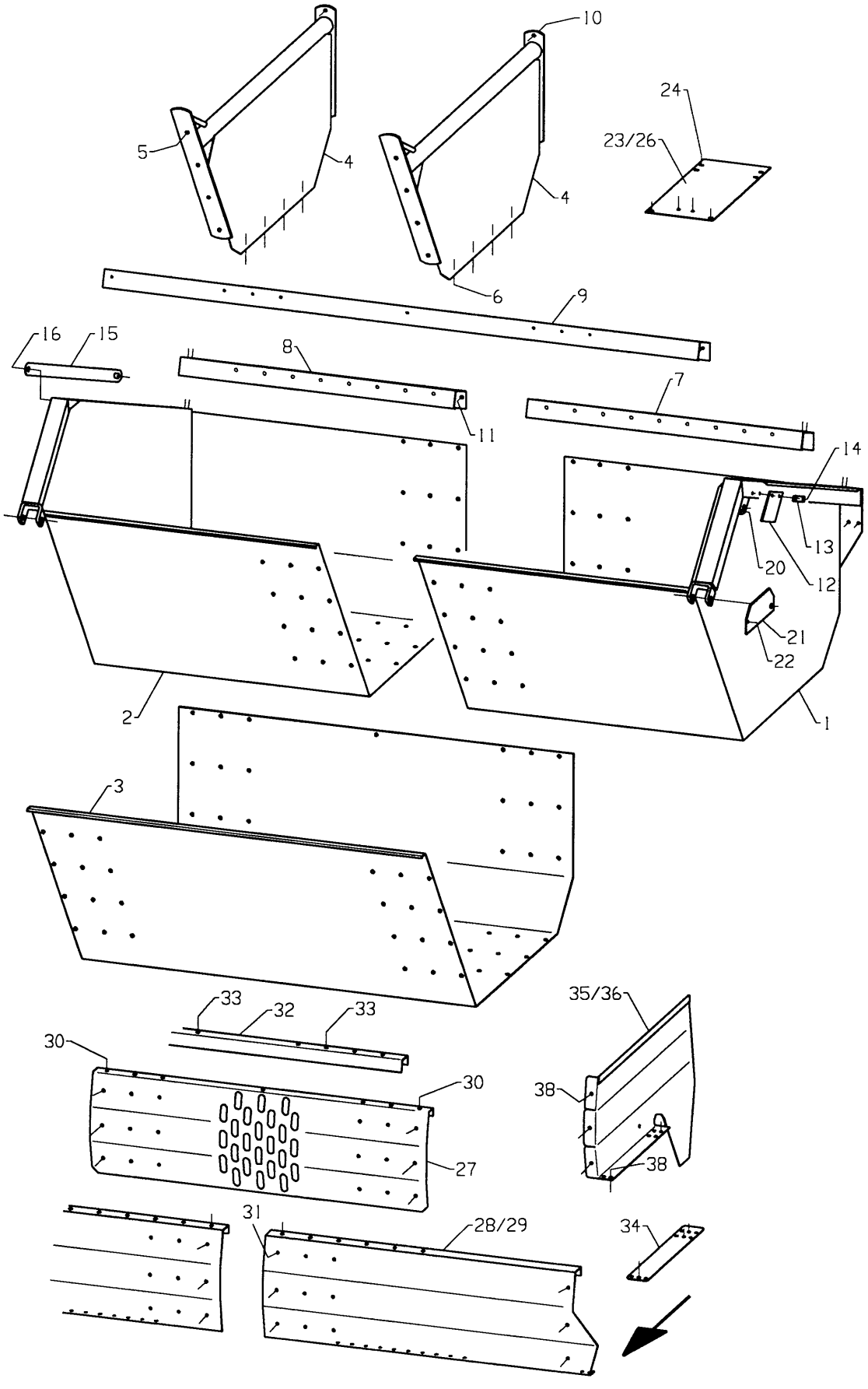
10
24
5
4
23/26
4
6
9
16
15
8
7
11
14
13
20
12
21
22
2
1
3
33
32
33
35/36
30
30
38
27
38
31
28/29
34

Fig. 10

Utgave: Issue: 3	Redskap: Implement: POTETSETTER SLEPT 3200 / POTATO PLANTER TRAILED 3200	Kverneland
Dato: Date: 94-11	Enhet Unit TANK / TANK	Fig nr.: 10

Ref. No.	Delenr. Part no.	Ant. Qty.	Gjenstand	Description	Anmerkning Note
			TANK	**TANK**	
1-16	**217316**	**1**	**TANK KOMPL.**	**TANK ASSY**	
1	217320	1	TANKSIDE V.	TANK SIDE LEFT	
2	217321	1	TANKSIDE H.	TANK SIDE RIGHT	
3	217338	1	TANKPLATE MIDTRE	TANK PLATE CENTRE	
4	217340	2	TANKAVSTIVER	REINFORCEMENT	
5	813525	12	SEKSKANTSKRUE M10X25-8.8 GALV.	HEX. BOLT M10X25-8.8 GALV.	
5	860160	12	BRIKKE Ø10.5-Ø21X2	WASHER Ø10.5-Ø21X2	
5	852160	12	NYLOCKMUTTER M10 GALV	NYLOCK NUT M10 GALV.	
6	813520	8	SEKSKANTSKRUE M10X20-8.8 GALV.	HEX. BOLT M10X20-8.8 GALV.	
6	860160	8	BRIKKE Ø10.5-Ø21X2	WASHER Ø10.5-Ø21X2	
6	852160	8	NYLOCKMUTTER M10 GALV	NYLOCK NUT M10 GALV.	
7	217367	1	TANKBJELKE VENSTRE	LEFT TANK BALK	
8	217368	1	TANKBJELKE HØGRE	RIGHT TANK BALK	
9	217366	1	TANKBJELKE MIDTRE	TANK BALK CENTRE	
10	813530	2	SEKSKANTSKRUE M10X30-8.8 GALV.	HEX. BOLT M10X30-8.8 GALV.	
10	860160	2	BRIKKE Ø10.5-Ø21X2	WASHER Ø10.5-Ø21X2	
10	852160	2	NYLOCKMUTTER M10 GALV	NYLOCK NUT M10 GALV.	
11	813520	11	SEKSKANTSKRUE M10X20-8.8 GALV.	HEX. BOLT M10X20-8.8 GALV.	
11	860160	11	BRIKKE Ø10.5-Ø21X2	WASHER Ø10.5-Ø21X2	
11	852160	11	NYLOCKMUTTER M10 GALV	NYLOCK NUT M10 GALV.	
12	219570	2	SYLINDERSKJERM	CYLINDER GUARD	
13	219572	2	KLEMSKINNE	CLAMP	
14	839416	4	SENKSKRUE M/SPOR M8X16 GALV.	SLOTTED COUNTERSUNK SCR.M8X16	
15	217370	1	SIKKERHETSSTAG	SAFETY STAY	
16	867056	2	RINGPINNE Ø6 ELZN	RING PIN 6 GALV	
20	813425	4	SEKSKANTSKRUE M8X25-8.8 GALV.	HEX. BOLT M8X25-8.8 GALV.	
20	852158	4	NYLOCKMUTTER M8 GALV	NYLOCK NUT M8 GALV.	
21	217371	2	HENGSLESKJERM	HINGE GUARD	
22	821420	2	LÅSESKRUE M8X20-4.6 GALV	CARRIAGE BOLT M8X20-4.6 GALV.	
22	860158	2	BRIKKE Ø8.4-Ø17X1.6	WASHER Ø8.4-Ø17X1.6	
22	852158	2	NYLOCKMUTTER M8 GALV	NYLOCK NUT M8 GALV.	
23	217361	3	DEKKPLATE 70-80CM	COVER 70-80CM	
24	821416	10	LÅSESKRUE M8X16-4.6 GALV	CARRIAGE BOLT M8X16-4.6 GALV.	
24	860160	10	BRIKKE Ø10.5-Ø21X2	WASHER Ø10.5-Ø21X2	
24	852158	10	NYLOCKMUTTER M8 GALV	NYLOCK NUT M8 GALV.	
25	821425	2	LÅSESKRUE M8X25-4.6 GALV	CARRIAGE BOLT M8X25-4.6 GALV	
25	860160	2	BRIKKE Ø10.5-Ø21X2	WASHER Ø10.5-Ø21X2	
25	852158	2	NYLOCKMUTTER M8 GALV	NYLOCK NUT M8 GALV.	
26	217362	3	DEKKPLATE 80-90CM	COVER 80-90CM	
27	217351	1	TANKFRONT MIDTRE	TANK FRONT CENTRE	
28	217352	1	TANKFRONT VENSTRE	TANK FRONT LEFT	
29	217353	1	TANKFRONT HØGRE	TANK FRONT RIGHT	
30	813520	6	SEKSKANTSKRUE M10X20-8.8 GALV.	HEX. BOLT M10X20-8.8 GALV.	
30	860158	6	BRIKKE Ø8.4-Ø17X1.6	WASHER Ø8.4-Ø17X1.6	
30	852158	6	NYLOCKMUTTER M8 GALV	NYLOCK NUT M8 GALV.	
31	813416	6	SEKSKANTSKRUE M8X16-8.8 GALV.	HEX. BOLT M8X16-8.8 GALV.	
31	860158	6	BRIKKE Ø8.4-Ø17X1.6	WASHER Ø8.4-Ø17X1.6	
31	852158	6	NYLOCKMUTTER M8 GALV	NYLOCK NUT M8 GALV.	
32	217355	1	TANKFRONTSKINNE	TANK FRONT RAIL	
33	813520	5	SEKSKANTSKRUE M10X20-8.8 GALV.	HEX. BOLT M10X20-8.8 GALV.	
33	860160	11	BRIKKE Ø10.5-Ø21X2	WASHER Ø10.5-Ø21X2	
33	852160	11	NYLOCKMUTTER M10 GALV	NYLOCK NUT M10 GALV.	
34	217364	2	FESTEPLATE	BRACKET	
35	217358	1	TANKFRONT SIDE VENSTRE	FRONT TANK PLATE LEFT	
36	217359	1	TANKFRONT SIDE HØGRE	FRONT TANK PLATE RIGHT	
37	813416	8	SEKSKANTSKRUE M8X16-8.8 GALV.	HEX. BOLT M8X16-8.8 GALV.	
37	860158	8	BRIKKE Ø8.4-Ø17X1.6	WASHER Ø8.4-Ø17X1.6	
37	852158	8	NYLOCKMUTTER M8 GALV	NYLOCK NUT M8 GALV.	

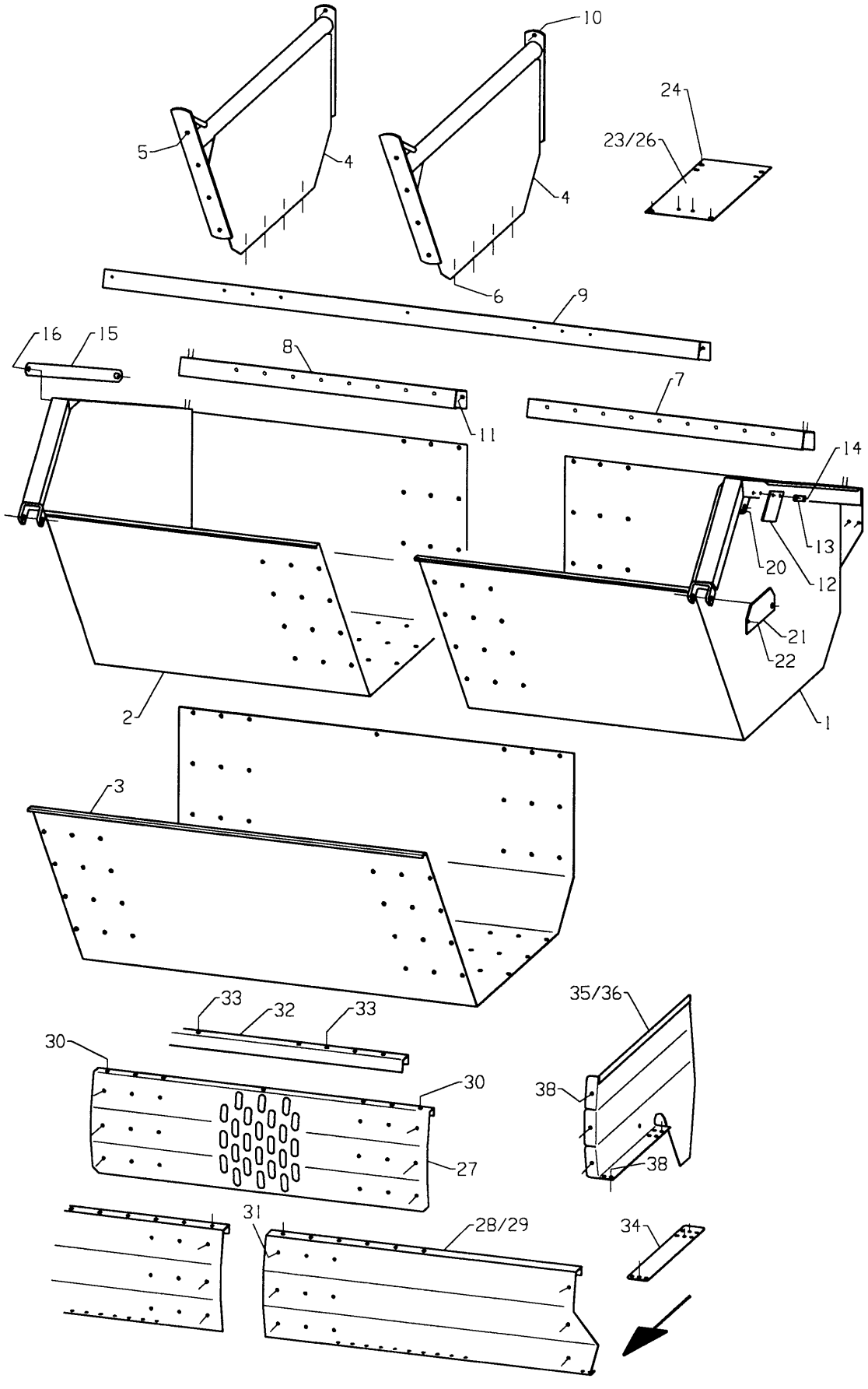
10
24
23/26
5
4
4
6
9
16
15
8
11
7
14
13
20
12
21
22
2
1
3
33
32
33
35/36
30
30
38
27
38
31
28/29
34

Fig. 10

Utgave: / Issue:	3	Redskap: / Implement:	POTETSETTER SLEPT 3200 POTATO PLANTER TRAILED 3200	Kverneland
Dato: / Date:	94-11	Enhet / Unit	TANK TANK	Fig nr.: 10

Ref. No.	Delenr. Part no.	Ant. Qty.	Gjenstand	Description	Anmerkning Note
38	813520	10	SEKSKANTSKRUE M10X20-8.8 GALV.	HEX. BOLT M10X20-8.8 GALV.	
38	860160	10	BRIKKE Ø10.5-Ø21X2	WASHER Ø10.5-Ø21X2	
38	852160	10	NYLOCKMUTTER M10 GALV	NYLOCK NUT M10 GALV.	

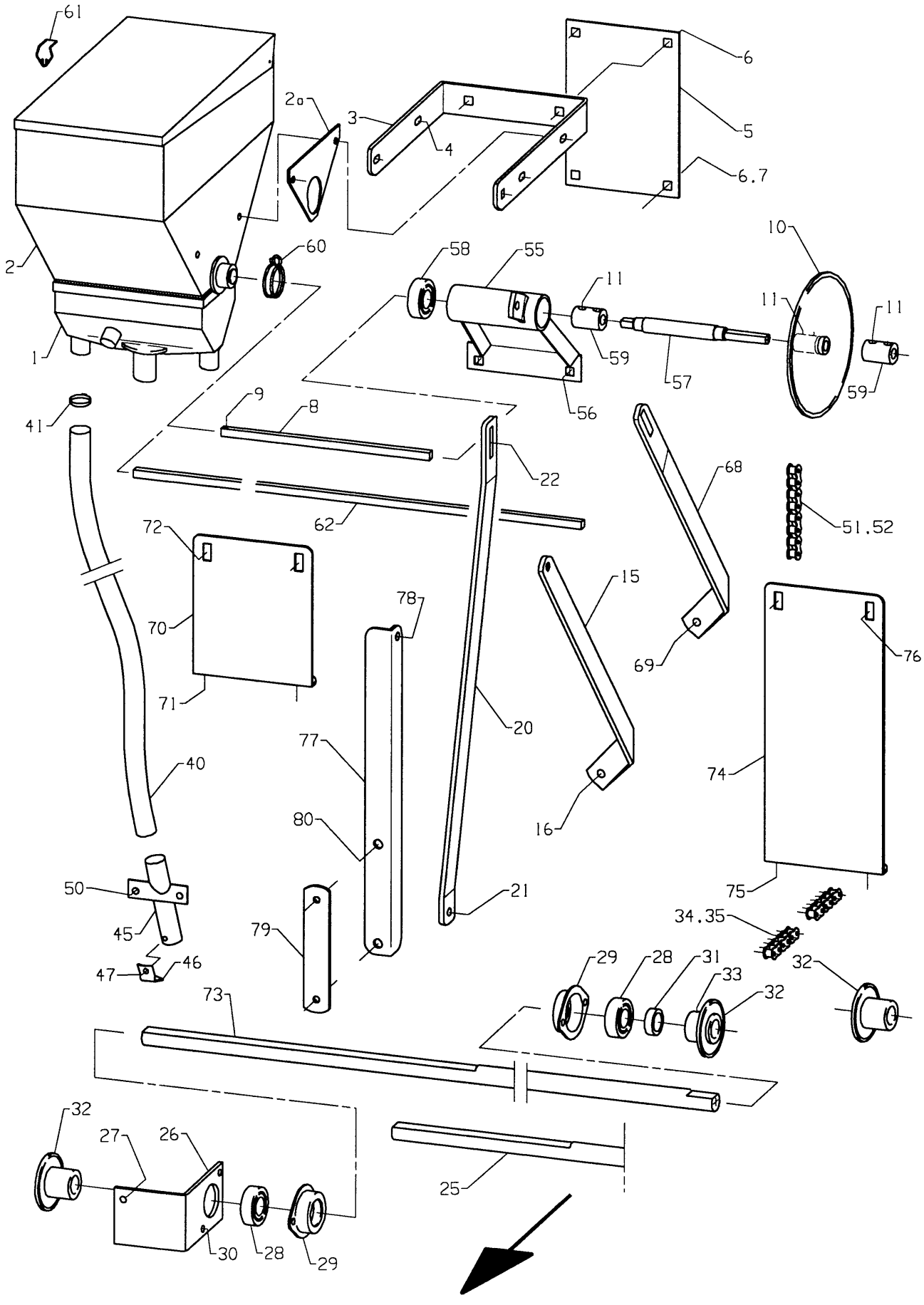
61
2a
3
4
6
5
6.7
2
60
58
55
11
10
59
57
56
1
41
9
8
22
62
68
51.52
72
70
71
78
15
69
76
40
77
20
74
80
16
50
45
47
46
79
21
75
34.35
29
28
31
33
32
73
27
26
30
25

Fig. 11

Utgave: / Issue: 3	Redskap: / Implement: POTETSETTER SLEPT 3200 / POTATO PLANTER TRAILED 3200	Kverneland
Dato: / Date: 94-11	Enhet / Unit GRANULATSÅMASKIN / GRANULE APPLICATOR	Fig nr.: 11

Ref. No.	Delenr. Part no.	Ant. Qty. 2R	Ant. Qty. 4R	Gjenstand	Description	Anmerkning Note
1	216001	1	2	SÅENHET MICRO-VOLUMEX	GRANULE APPLICATOR	
2	216002	1	2	GRANULATBEHOLDER	GRANULE HOPPER BODY	
2a	216016	1		DRIVAKSELSTØTTEPLATE	SUPPORT PLATE	
3	216009	1	2	BØYLE	BOW	
4	813420	4	8	SEKSKANTSKRUE M8X20-8.8 GALV.	HEX.BOLT M8X20-8.8 GALV.	
4	860158	4	8	BRIKKE Ø8.4-Ø17X1.6	WASHER Ø8.4-Ø17X1.6	
4	852158	4	8	NYLOCKMUTTER M8 GALV	NYLOCK NUT M8 GALV.	
5	216015	1	2	PLATE FOR LÅG TANK	PLATE FOR LOW TANK	
6	821520	4	8	LÅSESKRUE M10X20-4.6 GALV.	CARRIAGE BOLT M10X20-4.6 GALV	
6	860160	2	4	BRIKKE Ø10.5-Ø21X2	WASHER Ø10.5-Ø21X2	
6	850160	4	8	SEKSKANTMUTTER M10-8 GALV.	HEX.NUT M10-8 GALV.	
7	231500	2	4	BRIKKE Ø13.5-Ø25X5	WASHER Ø13.5-Ø25X5	
8	216010	1		4KT. AKSEL	SHAFT	
9	865170	1	2	SPLINT 3.2X20 GALV.	SPLIT PIN 3,2 X 20	
10	216011	1	1	KJEDEHJUL 1/2"-46T	SPROCKET 1/2"-46T	
11	831512	2	6	GJENGESTIFT 6KT HOL M10X12	HEADLESS SCREW M10X12	
15	216014		2	STØTTESTAG	SUPPORTING STAY	
16	821520		2	LÅSESKRUE M10X20-4.6 GALV.	CARRIAGE BOLT M10X20-4.6 GALV	
16	860160		2	BRIKKE Ø10.5-Ø21X2	WASHER Ø10.5-Ø21X2	
16	850160		2	SEKSKANTMUTTER M10-8 GALV.	HEX.NUT M10-8 GALV.	
20	216013	1	1	STRAMMESTAG	TENSION STAY	
21	821530	1	1	LÅSESKRUE M10X30-4.6 GALV.	CARRIAGE BOLT M10X30-4.6 GALV	
21	860160	1	1	BRIKKE Ø10.5-Ø21X2	WASHER Ø10.5-Ø21X2	
21	850160	1	1	SEKSKANTMUTTER M10-8 GALV.	HEX. NUT M10-8 GALV.	
22	821530	1	1	LÅSESKRUE M10X30-4.6 GALV.	CARRIAGE BOLT M10X30-4.6 GALV	
22	270448	1	1	BRIKKE Ø11-Ø30X4	WASHER Ø11-Ø30X4	
22	850160	1	1	SEKSKANTMUTTER M10-8 GALV.	HEX. NUT M10-8 GALV.	
25-34	**216018**	**1**	**1**	**DRIFT KOMPL.**	**DRIVE SHAFT ASSY**	
25	216019	1	1	AKSEL	SHAFT	
26	216023	1	1	FESTEVINKEL	BRACKET	
27	813525	2	2	SEKSKANTSKRUE M10X25-8.8 GALV.	HEX BOLT M10X25-8.8 GALV.	
27	860160	4	4	BRIKKE Ø10.5-Ø21X2	WASHER Ø10.5-Ø21X2	
27	852160	2	2	NYLOCKMUTTER M10 GALV	NYLOCK NUT M10 GALV.	
28	870727	2	2	KULELAGER 6205-2RS	BALL BEARING 6205-2RS1	
29	215101	2	2	LAGERHUS Ø52-Ø37	BEARING HOUSING Ø52-Ø37	
30	813416	4	4	SEKSKANTSKRUE M8X16-8.8 GALV.	HEX.BOLT M8X16-8.8 GALV.	
30	860158	4	4	BRIKKE Ø8.4-Ø17X1.6	WASHER Ø8.4-Ø17X1.6	
30	852158	4	4	NYLOCKMUTTER M8 GALV	NYLOCK NUT M8 GALV.	
31	302428	1	1	HYLSE Ø25.2-Ø33X10	SPACER Ø25.2-Ø33X10	
32	216020	3	3	KJEDEHJUL 1/2" 18T	SPROCKET 1/2" 18T	
33	831616	3	3	GJENGESTIFT 6KT.HOL M12X16	HEADLESS SCREW M12X16	
34	901425	1	1	RULLEKJEDELÅS 1/2"X3/16"	CONNECTING LINK 1/2"X3/16"	
35	901438	1	1	RULLEKJEDE 1/2"X3/16"X521	ROLLER CHAIN 1/2"X3/16"X521	
40	216025	2	4	SÅSLANGE	TUBE	
41	216026	2	4	SLANGEKLEMME Ø25	HOSE CLIP Ø25	
45-47	**216027**	**2**	**4**	**SPREIETUT KOMPL.**	**FEED TUBE ASSY**	
45	216028	1	1	SPREIETUT	FEED TUBE	
46	270187	1	1	SPREIEPLATE	SPREADING PLATE	
47	837308	1	1	PANSKRUE M/SPOR M6X8 GALV.	SLOTTED PAN HEAD BOLT M6X8	
50	813420	4	8	SEKSKANTSKRUE M8X20-8.8 GALV.	HEX.BOLT M8X20-8.8 GALV.	
50	860158	4	8	BRIKKE Ø8.4-Ø17X1.6	WASHER Ø8.4-Ø17X1.6	
50	852158	4	8	NYLOCKMUTTER M8 GALV	NYLOCK NUT M8 GALV.	
51	901495	1	1	RULLEKJEDE 1/2"X3/16"X2019	CHAIN 1/2"X3/16"X2007	
52	901425	1	1	RULLEKJEDELÅS 1/2"X3/16"	CONNECTING LINK 1/2"X3/16"	

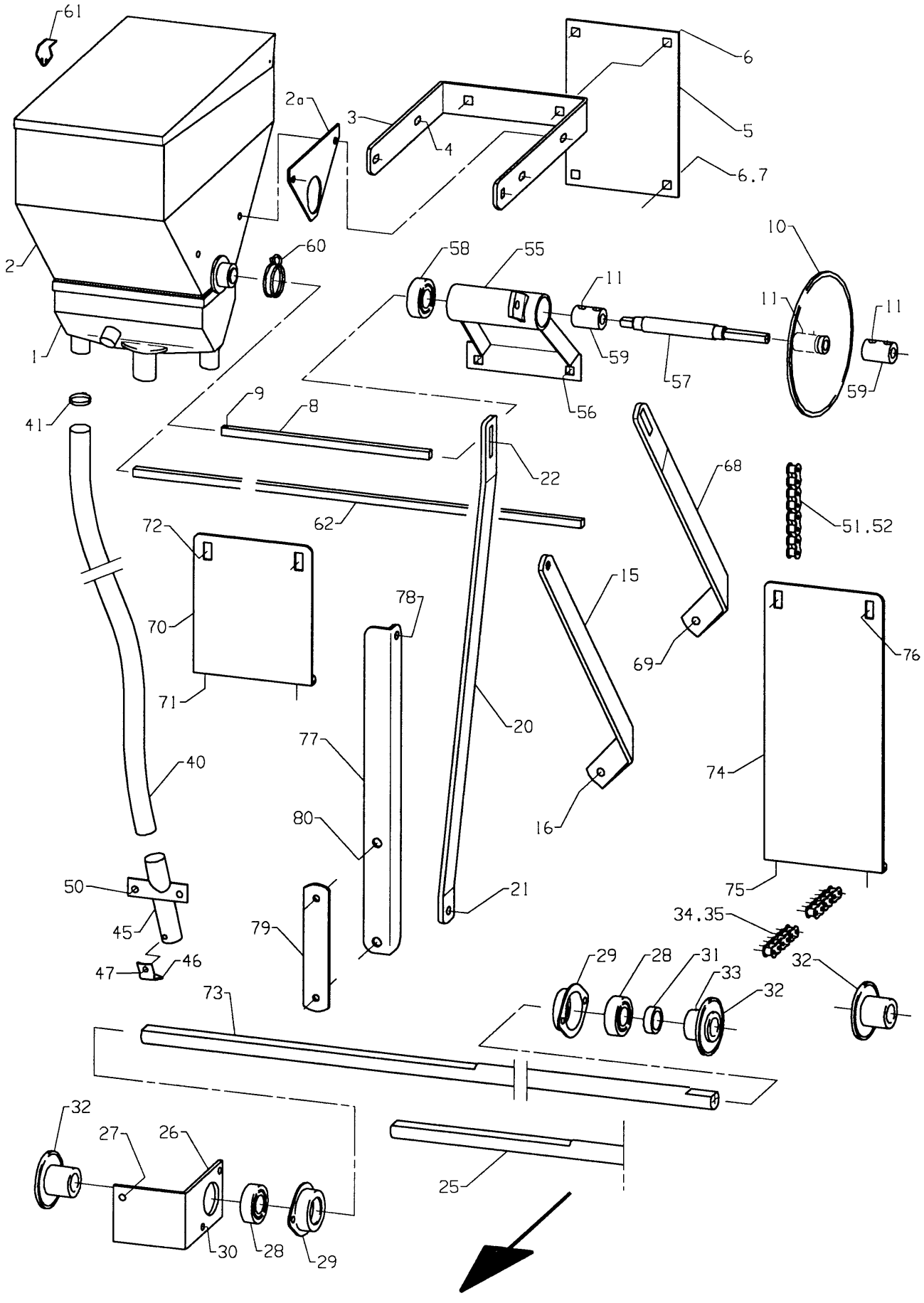
61
2a
3
4
6
5
6.7
2
60
58
55
11
10
59
57
56
1
41
9
8
22
62
68
51.52
72
70
71
78
15
69
76
40
77
20
74
80
16
50
45
47
46
79
21
75
34.35
29
28
31
33
32
73
27
26
30
25

Fig. 11

Utgave: Issue: 3	Redskap: Implement: POTETSETTER SLEPT 3200 / POTATO PLANTER TRAILED 3200	Kverneland
Dato: Date: 94-11	Enhet Unit: GRANULATSÅMASKIN / GRANULE APPLICATOR	Fig nr.: 11

Ref. No.	Delenr. Part no.	Ant. Qty.	Gjenstand	Description	Anmerkning Note
55	216034	1	HYLSE	COLLAR	
56	821520	2	LÅSESKRUE M10X20-4.6 GALV.	CARRIAGE BOLT M10X20-4.6 GALV	
56	231500	2	BRIKKE Ø13.5-Ø25X5	WASHER Ø13.5-Ø25X5	
56	850160	2	SEKSKANTMUTTER M10-8 GALV.	HEX.NUT M10-8 GALV.	
57	216040	1	AKSEL	SHAFT	
58	870718	2	KULELAGER 6203 2RS-C3 SPESIAL	BALL BEARING 6203-2RS1-C3	
59	216041	2	BOSS	BOSS	
60	216003	1 2	KLIPS	CLAMP	
61	216004	1 2	KLIPS FOR LOKK	CLAMP FOR LID	
62	216043	2	4KT. AKSEL	SHAFT	
68	216039	1	STAG	STAY	
69	813525	1	SEKSKANTSKRUE M10X25-8.8 GALV.	HEX. BOLT M10X25-8.8 GALV.	
69	860160	1	BRIKKE Ø10.5-Ø21X2	WASHER Ø10.5-Ø21X2	
69	821530	1	LÅSESKRUE M10X30-4.6 GALV.	CARRIAGE BOLT M10X30-4.6 GALV	
70	216038	1	FESTEPLATE	BRACKET	
71	813525	2	SEKSKANTSKRUE M10X25-8.8 GALV.	HEX. BOLT M10X25-8.8 GALV.	
71	860160	2	BRIKKE Ø10.5-Ø21X2	WASHER Ø10.5-Ø21X2	
71	852160	2	NYLOCKMUTTER M10 GALV	NYLOCK NUT M10 GALV.	
72	821520	2	LÅSESKRUE M10X20-4.6 GALV.	CARRIAGE BOLT M10X20-4.6 GALV	
72	860160	2	BRIKKE Ø10.5-Ø21X2	WASHER Ø10.5-Ø21X2	
72	852160	2	NYLOCKMUTTER M10 GALV	NYLOCK NUT M10 GALV.	
73	216031	1	DRIVAKSEL 4R	DRIVE SHAFT	
74	216045	2	FESTEPLATE BEHOLDER	BRACKET HOPPER BODY	
75	813525	4	SEKSKANTSKRUE M10X25-8.8 GALV.	HEX. BOLT M10X25-8.8 GALV.	
75	860160	4	BRIKKE Ø10.5-Ø21X2	WASHER Ø10.5-Ø21X2	
75	852160	6	NYLOCKMUTTER M10 GALV	NYLOCK NUT M10 GALV.	
76	821520	6	LÅSESKRUE M10X20-4.6 GALV.	CARRIAGE BOLT M10X20-4.6 GALV	
76	860160	6	BRIKKE Ø10.5-Ø21X2	WASHER Ø10.5-Ø21X2	
76	852160	4	NYLOCKMUTTER M10 GALV	NYLOCK NUT M10 GALV.	
77	216046	2	FESTEVINKEL	BRACKET	
78	813525	2	SEKSKANTSKRUE M10X25-8.8 GALV.	HEX. BOLT M10X25-8.8 GALV.	
78	860160	4	BRIKKE Ø10.5-Ø21X2	WASHER Ø10.5-Ø21X2	
78	852160	2	NYLOCKMUTTER M10 GALV	NYLOCK NUT M10 GALV.	
79	215295	2	LASK 40X8-Ø13/133/Ø13	CLAMP 40X8-Ø13/133/Ø13	
80	813705	4	SEKSKANTSKRUE M12X150-8.8 GALV	HEX. BOLT M12X150-8.8	
80	860163	8	BRIKKE Ø13-Ø24X2.5	WASHER Ø13-Ø24X2.5	
80	852160	4	NYLOCKMUTTER M10 GALV	NYLOCK NUT M10 GALV.	

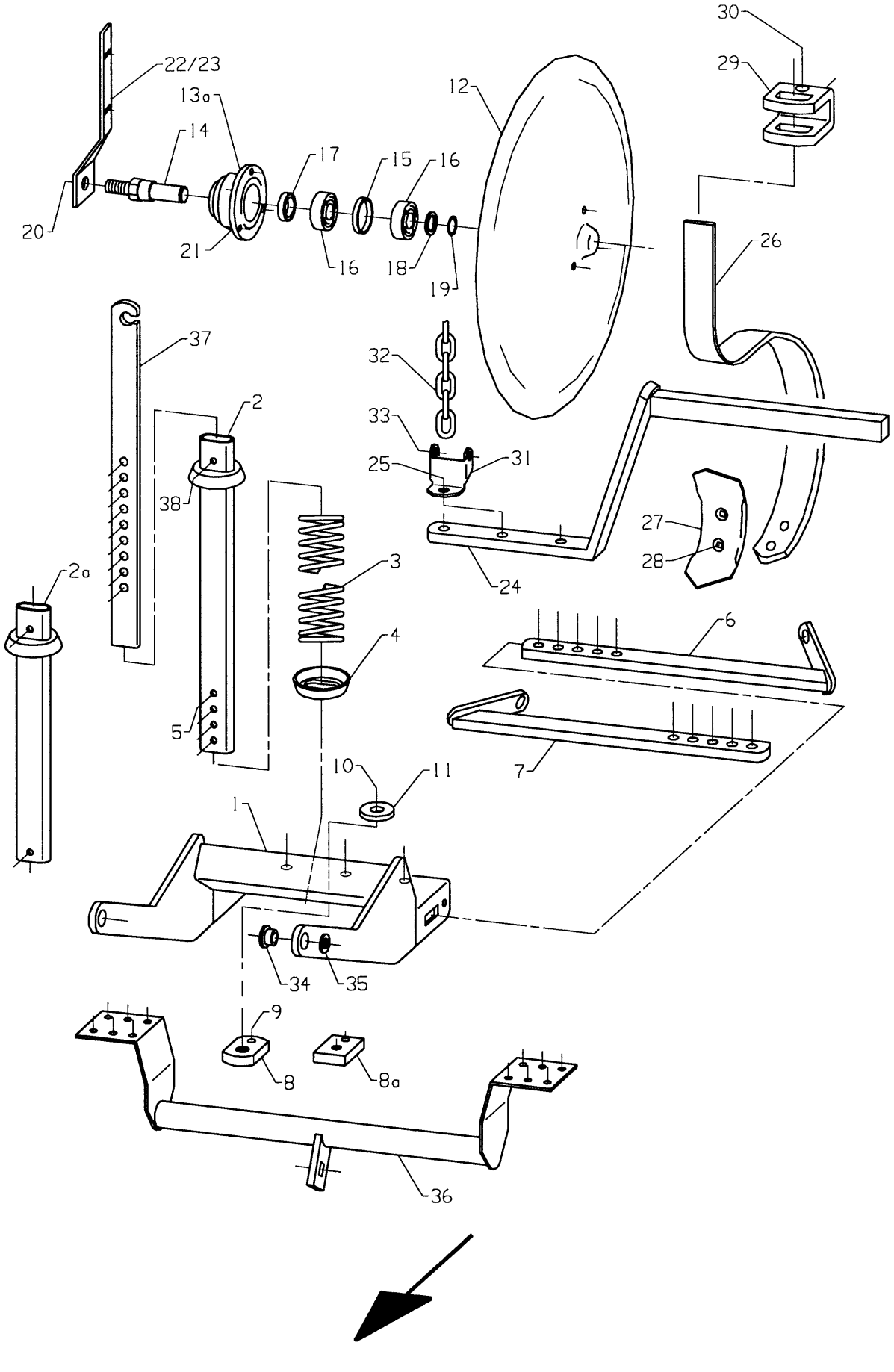
30
29
22/23
13a
14
17
15
16
12
20
21
16
18
19
26
37
32
2
33
25
31
38
27
28
3
24
2a
4
6
5
7
10
11
1
34
35
9
8
8a
36

Fig. 12

Utgave: Issue: 3	Redskap: Implement: POTETSETTER SLEPT 3200 / POTATO PLANTER TRAILED 3200	Kverneland
Dato: Date: 94-11	Enhet Unit RULLESKJÆR 3215 / DISC ROLLERS 3215	Fig nr.: 12

Ref. No.	Delenr. Part no.	Ant. Qty.	Gjenstand	Description	Anmerkning Note
1	214233	1	RULLESKJÆRRAMME SV..	ROLLER DISC FRAME	205-
1a	217403	1	RULLESKJÆRRAMME SV.	ROLLER DISC FRAME	-204
2	214203	1	REGULERHYLSE	COLLAR REGULATING	
2a	215240	1	REGULERHYLSE	COLLAR REGULATING	
3	223494	1	TRYKKFJØR Ø7-Ø52X370	TENSION SPRING Ø7-Ø52X370	
4	215241	1	SKIVE	WASHER	
5	867086	1	RØRPINNE Ø10X40XØ36	PIN Ø10XØ40XØ36	
6	214240	1	RULLESKJÆRARM V	LEFT DISC ROLLER ARM	205-
6a	215460	1	RULLESKJÆRARM V	LEFT DISC ROLLER ARM	-204
7	214241	1	RULLESKJÆRARM H. SV.	RIGHT DISC ROLLER ARM	205-
7a	215461	1	RULLESKJÆRARM H	RIGHT DISC ROLLER ARM	-204
8	214245	1	MUTTERBRIKKE M16-Ø10	NUT WASHER	205-
8a	215456	1	LASK	CLAMP	-204
9	866540	1	SPENNHYLSE 10X40	LOCK PIN 10X40	
9a	866536	1	SPENNHYLSE 10X36 ELZN	LOCK PIN 10X36	
10	813850	1	SEKSKANTSKRUE M16X50-8.8 ELZN	HEX. BOLT M16X50-8.8 GALV.	
11	410334	1	BRIKKE Ø17-Ø43X5 spesial	WASHER Ø17-Ø43X6	
12	271250	1	RULLESKJÆRPLATE 450	DISC 450	
13-21	**271252**	**1**	**KULELAGERBOSS M16 AKSEL**	**BALL BEARING BOSS M16 SHAFT**	
13a	271253	1	BOSS	BOSS	
14	271254	1	AKSEL	SHAFT	
15	271255	1	AVSTANDSRING	SPACER	
16	870720	2	KULELAGER 6204	BALL BEARING 6204	
17	871254	1	TETNINGSRING 2535/7	OIL SEAL 25357	
18	868604	1	STØTTERING 20X28X2	SUPPORT RING 20X28X2.0	
19	868420	1	LÅSERING UTV. A20X1.2	CIRCLIP A20X1.2	
20	852166	1	NYLOCKMUTTER M16 GALV	NYLOCK NUT M16 GALV	
21	873540	1	SMØRENIPPEL M6 RETT	GREASE NIPPLE M6	
22	214226	4	RULLESKJÆRAVSKRAPER V.	SCRAPER LEFT	205-
22a	223174	4	RULLESKJÆRAVSKRAPER V.	SCRAPER, LEFT	-204
23	214227	4	RULLESKJÆRAVSKRAPER H.	SCRAPER RIGHT	205-
23a	223175	4	RULLESKJÆRAVSKRAPER H.	SCRAPER,RIGHT	-204
24	215464	2	FESTESTANG	ATACHING BAR	
25	813640	4	SEKSKANTSKRUE M12X40-8.8 GALV.	HEX. BOLT M12X40-8.8 GALV	
25	860163	8	BRIKKE Ø13-Ø24X2.5	WASHER Ø13-Ø24X2.5	
25	852162	4	NYLOCKMUTTER M12 GALV	NYLOCK NUT M12 GALV	
25a	813625	2	SEKSKANTSKRUE M12X25-8.8 GALV.	HEX. BOLT M12X25-8.8 GALV	
25a	860163	4	BRIKKE Ø13-Ø24X2.5	WASHER Ø13-Ø24X2.5	
25a	852162	2	NYLOCKMUTTER M12 GALV	NYLOCK NUT M12 GALV	
26	223190	2	TINDE	TINE	
27	288821	3	SPISS 63	POINT 63MM	
28	823525	6	PLOGSKRUE M10X25 8.8 GALV.	PLOUGH BOLT M10X25 8.8 GALV.	
28	860160	6	BRIKKE Ø10.5-Ø21X2	WASHER Ø10.5-Ø21X2	
28	850160	6	SEKSKANTMUTTER M10-8 GALV.	HEX. NUT M10-8 GALV.	
29	288776	2	FESTE 25-40 FLATT	TOOLBAR CLAMP 25-38 FLAT	
30	813850	4	SEKSKANTSKRUE M16X50-8.8 ELZN	HEX. BOLT M16X50-8.8 GALV.	
31	217407	4	LØFTEØRE	LIFTING BRACKET	
32	217416	4	KJETTING Ø6.5-24X504	CHAIN 6.5-24X504	
33	867091	4	RØRPINNE Ø10X57X38 M/LÅS	PIN	
34	215198	8	LAGERFORING Ø12.7X15-Ø20/11.5	BEARING LINING Ø12.7X15	
35	860163	8	BRIKKE Ø13-Ø24X2.5	WASHER Ø13-Ø24X2.5	
35	813640	8	SEKSKANTSKRUE M12X40-8.8 GALV.	HEX. BOLT M12X40-8.8 GALV	
36	217410	4	FJØRFESTE	SPRING BRACKET	
37	215235	4	REGULERSTANG RULLESKJÆR	REGULATING BAR DISC ROLLER	
38	867086	4	RØRPINNE Ø10X40XØ36	PIN Ø10XØ40XØ36	
39	214229	4	AVSKRAPERPLATE	ATTACHING BAR	
40	821416	8	LÅSESKRUE M8X16-4.6 ELZN.	CARRIAGE BOLT M8X16-4.6 GALV.	
40	860158	8	BRIKKE Ø8.4-17X1.6 ELZN	WASHER Ø8.4-Ø17X1.6	
40	850158	8	SEKSKANTMUTTER M8-8 ELZN.	HEX. NUT M8-8 GALV.	

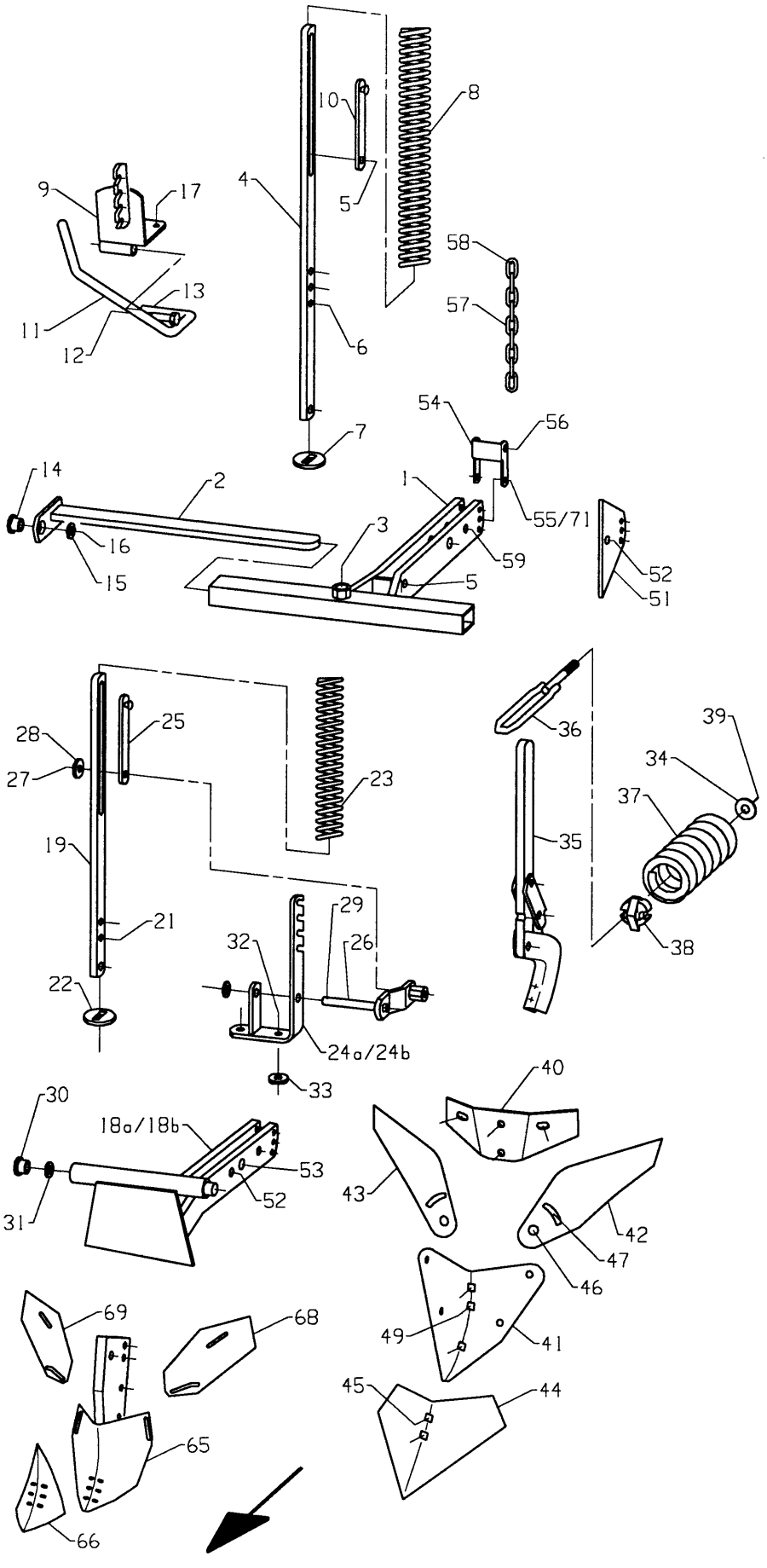
10
8
9
17
4
5
58
13
57
11
6
12
54
56
7
14
2
1
55/71
16
3
59
15
5
52
51
28
25
39
36
27
23
34
37
19
35
21
29
32
26
38
22
24a/24b
33
40
30
18a/18b
53
43
52
31
42
47
46
49
41
69
68
45
44
65
66

Fig. 13

Utgave: / Issue: 3	Redskap: / Implement: POTETSETTER SLEPT 3200 / POTATO PLANTER TRAILED 3200	Kverneland
Dato: / Date: 94-11	Enhet / Unit HYPPESKJÆR / RIDGING SHOVELS	Fig nr.: 13

Ref. No.	Delenr. Part no.	Ant. Qty.	Gjenstand	Description	Anmerkning Note
1-13	**217585**	**3**	**HYPPESKJÆROPPH. MIDTRE KOMPL.**	**CENTRAL RIDGING BODY BRACKET**	
1-3	**217570**	**1**	**KROK MIDTRE KOMPL.**	**CENTRAL HOOK ASSY**	
1	217571	1	KROK MIDTRE	CENTRAL HOOK	
2	217574	2	HENGSLEKROK	HINGE HOOK	
3	813830	1	SEKSKANTSKRUE M16X30-8.8 GALV.	HEX. BOLT M16X30-8.80 GALV.	
4	217583	1	FJØRSTYRING	SPRING STEERING	
5	813660	1	SEKSKANTSKRUE M12X60-8.8 GALV.	HEX. BOLT M12X60-8.8 GALV.	
5	852162	1	NYLOCKMUTTER M12 GALV	NYLOCK NUT M12 GALV	
6	813525	1	SEKSKANTSKRUE M10X25-8.8 GALV.	HEX. BOLT M10X25-8.8 GALV.	
6	852160	1	NYLOCKMUTTER M10 GALV	NYLOCK NUT M10 GALV.	
7	403823	1	BRIKKE	WASHER	
8	223172	1	TRYKKFJØR Ø7-Ø42X380	TENSION SPRING Ø7-Ø42X380	
9	217579	1	FJØRPLATE	SPRING PLATE	
10	218617	1	FJØRPAL	SPRING PAWL	
11	218604	1	FJØRSPAK	SPRING HANDLE	
12	850160	1	SEKSKANTMUTTER M10-8 GALV.	HEX. NUT M10-8 GALV.	
13	865270	1	SPLINT 5X20 GALV.	SPLIT PIN 5X20	
14	215198	6	LAGERFORING Ø12.7X15-Ø20/11.5	BEARING LINING Ø12.7X15	
15	860163	6	BRIKKE Ø13-Ø24X2.5	WASHER Ø13-Ø24X2.5	
16	813640	6	SEKSKANTSKRUE M12X40-8.8 GALV.	HEX. BOLT M12X40-8.8 GALV	
17	813420	6	SEKSKANTSKRUE M8X20-8.8 GALV.	HEX. BOLT M8X20-8.8 GALV	
17	860158	12	BRIKKE Ø8.4-Ø17X1.6	WASHER Ø8.4-Ø17X1.6	
17	852158	6	NYLOCKMUTTER M8 GALV	NYLOCK NUT M8 GALV.	
18a-29	**217587**	**1**	**HYPPESKJÆROPPHENG YTRE V. KPL**	**OUTER RIDGING BODY BRACKET L**	
18b-29	**217588**	**1**	**HYPPESKJÆROPPHENG YTRE H. KPL**	**OUTER RIDGING BODY BRACKET R**	
18a	217551	1	KROK YTRE V	OUTER HOOK LEFT	FOR TYPE 550
18b	217552	1	KROK YTRE H.	OUTER HOOK RIGHT	FOR TYPE 450
19	217559	2	FJØRSTYRING	SPRING STEERING	
20	813660	2	SEKSKANTSKRUE M12X60-8.8 GALV.	HEX. BOLT M12X60-8.8 GALV.	
20	852162	2	NYLOCKMUTTER M12 GALV	NYLOCK NUT M12 GALV	
21	813525	2	SEKSKANTSKRUE M10X25-8.8 GALV.	HEX. BOLT M10X25-8.8 GALV.	
21	850160	2	SEKSKANTMUTTER M10-8 GALV.	HEX. NUT M10-8 GALV.	
22	403823	2	BRIKKE	WASHER	
23	223171	2	TRYKKFJØR Ø6-Ø41X380	TENSION SPRING Ø6-Ø41X380	
24a	217560	1	FJØRFESTE V.	SPRING BRACKET LEFT	FOR TYPE 550
24b	217561	1	FJØRFESTE H.	SPRING BRACKET RIGHT	FOR TYPE 450
25	218617	2	FJØRPAL	SPRING PAWL	
26	217590	2	FJØRSTILLINGSARM SV.	SPRING ADJUSTING ARM	
27	813580	2	SEKSKANTSKRUE M10X80-8.8 GALV.	HEX. BOLT M10X80-8.8 GALV.	
27	860160	2	BRIKKE Ø10.5-Ø21X2	WASHER Ø10.5-Ø21X2	
28	270448	2	BRIKKE Ø11-Ø30X4	WASHER Ø11-Ø30X4	
29	865270	2	SPLINT 5X20 GALV.	SPLIT PIN 5X20	
30	215198	2	LAGERFORING Ø12.7X15-Ø20/11.5	BEARING LINING Ø12.7X15	
31	860170	2	BRIKKE Ø21-Ø37X3	WASHER Ø21-Ø37X3	
31	813640	2	SEKSKANTSKRUE M12X40-8.8 GALV.	HEX. BOLT M12X40-8.8 GALV	
32	813530	4	SEKSKANTSKRUE M10X30-8.8 GALV.	HEX. BOLT M10X30-8.8 GALV.	
32	860160	4	BRIKKE Ø10.5-Ø21X2	WASHER Ø10.5-Ø21X2	
33	270448	4	BRIKKE Ø11-Ø30X4	WASHER Ø11-Ø30X4	
33	852160	4	NYLOCKMUTTER M10 GALV	NYLOCK NUT M10 GALV.	
34-39	**288799**	**5**	**FJØRENDE HYPPESKJÆRKROK**	**RIDGING HOOK W/STONE RELEASER**	
34	228241	1	BRIKKE Ø13.5-Ø35X3	WASHER Ø13.5-Ø35X3	
35	288796	1	KROK	HOOK	
36	288844	1	FJØRBOLT	SPRING BOLT W/NUT AND WASHER	
37	288812	1	TRYKKFJØR Ø13-Ø67X180 M/KON	SPRING	
38	288007	1	FJØRBRIKKE	SPRING RETAINER	
39	850162	1	SEKSKANTMUTTER M12-8 GALV	HEX. NUT M12-8 GALV.	
40-49	**270437**	**5**	**STILLBART HYPPESKJÆR 450MM KPL**	**RIDGING SHOVEL 450MM ASSY.**	
40	270447	1	STØTTEPLATE	SUPPORTING PLATE	

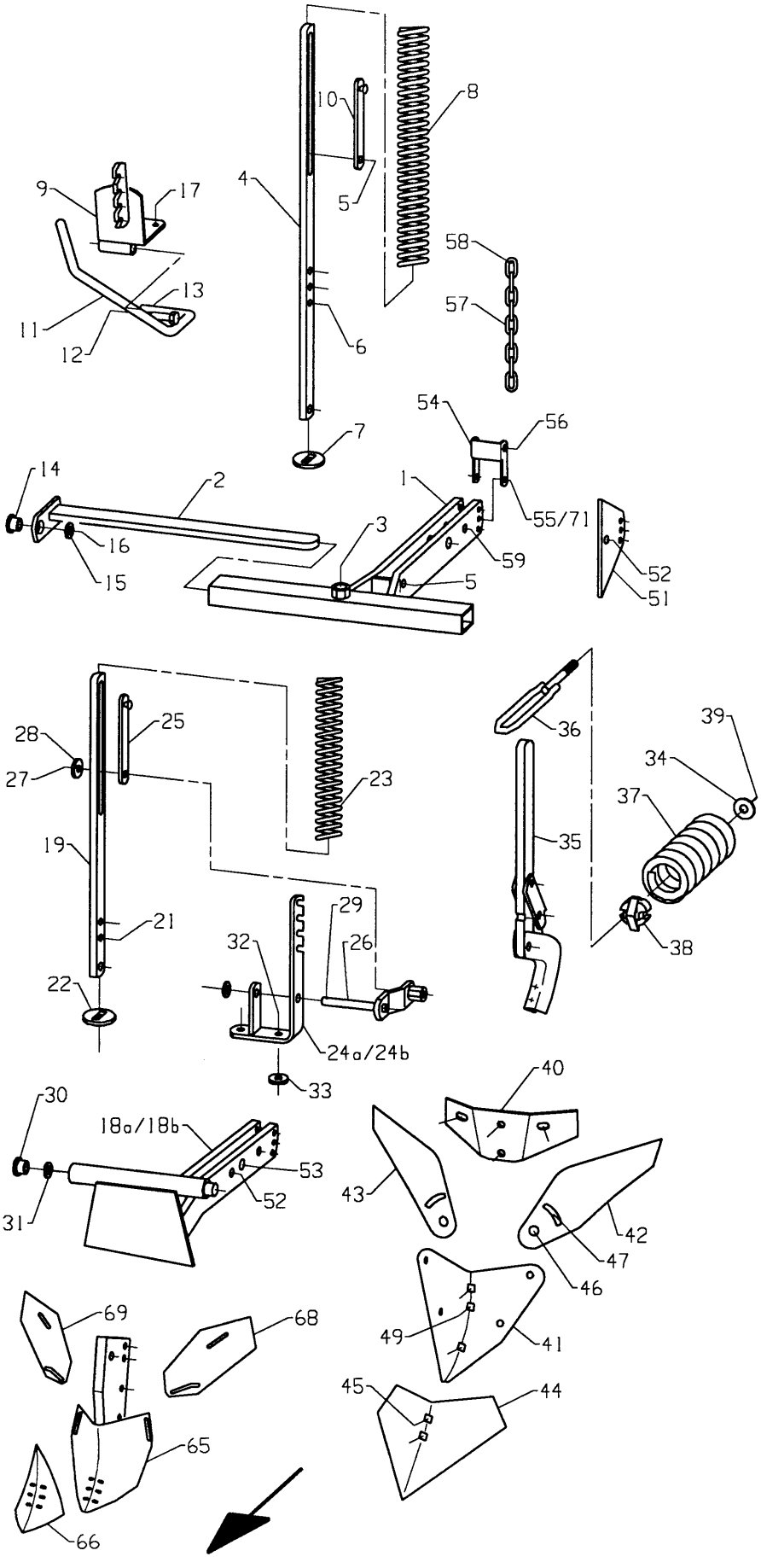
10
8
9
17
4
5
58
57
13
11
12
6
54
56
7
14
2
1
55/71
16
3
59
15
5
52
51
28
25
39
36
27
23
34
37
19
35
21
29
32
26
38
22
24a/24b
33
40
30
18a/18b
53
43
52
31
42
47
46
69
68
49
41
45
44
65
66

Fig. 13

Utgave: Issue: 3	Redskap: POTETSETTER SLEPT 3200 Implement: POTATO PLANTER TRAILED 3200	Kverneland
Dato: Date: 94-11	Enhet HYPPESKJÆR Unit RIDGING SHOVELS	Fig nr.: 13

Ref. No.	Delenr. Part no.	Ant. Qty.	Gjenstand	Description	Anmerkning Note
41	270450	1	KROPP	BODY	
42	270441	1	VING 450MM, VENSTRE	WING 450MM, LEFT	
43	270442	1	VING 450MM, HØYRE	WING 450MM, RIGHT	
44	270453	1	SPISS	POINT	
45	823590	1	HAKKESKJÆRSKR.M10X40-8.8 GALV.	HOE SHARE BOLT M10X40-8.8 GALV	
45	860160	1	BRIKKE Ø10.5-Ø21X2	WASHER Ø10.5-Ø21X2	
45	850160	1	SEKSKANTMUTTER M10-8 GALV.	HEX. NUT M10-8 GALV.	
46	823525	2	PLOGSKRUE M10X25 8.8 GALV.	PLOUGH BOLT M10X25 8.8 GALV.	
47	823530	2	PLOGSKRUE M10X30-8.8 GALV.	PLOUGH BOLT M10X30-8.8 GALV.	
48	823590	1	HAKKESKJÆRSKR.M10X40-8.8 GALV.	HOE SHARE BOLT M10X40-8.8 GALV	
48	850160	5	SEKSKANTMUTTER M10-8 GALV.	HEX. NUT M10-8 GALV.	
48	860160	5	BRIKKE Ø10.5-Ø21X2	WASHER Ø10.5-Ø21X2	
49	821560	2	LÅSESKRUE M10X60-4.6 GALV.	CARRIAGE BOLT M10X60-4.6 GALV.	
49	860160	2	BRIKKE Ø10.5-Ø21X2	WASHER Ø10.5-Ø21X2	
49	850160	2	SEKSKANTMUTTER M10-8 GALV.	HEX. NUT M10-8 GALV.	
50	821560	10	LÅSESKRUE M10X60-4.6 GALV.	CARRIAGE BOLT M10X60-4.6 GALV.	
50	860160	10	BRIKKE Ø10.5-Ø21X2	WASHER Ø10.5-Ø21X2	
50	850160	10	SEKSKANTMUTTER M10-8 GALV.	HEX. NUT M10-8 GALV.	
51	217594	5	STØTTEPLATE	SUPPORTING PLATE	FOR TYPE 450
52	813660	5	SEKSKANTSKRUE M12X60-8.8 GALV.	HEX. BOLT M12X60-8.8 GALV.	
52	860163	5	BRIKKE Ø13-Ø24X2.5	WASHER Ø13-Ø24X2.5	
52	852162	5	NYLOCKMUTTER M12 GALV	NYLOCK NUT M12 GALV	
53	813860	5	SEKSKANTSKRUE M16X60-8.8 GALV.	HEX. BOLT M16X60-8.8 GALV.	
53	860166	5	BRIKKE Ø17-Ø30X3	WASHER Ø17-Ø30X3	
53	850166	5	SEKSKANTMUTTER M16-8 GALV	HEX. NUT M16 GALV	
54	217577	5	LØFTEØRE	LIFTING EAR	
55	813460	5	SEKSKANTSKRUE M8X60-8.8 GALV.	HEX. BOLT M8X60-8.8 GALV	
55	860158	10	BRIKKE Ø8.4-Ø17X1.6	WASHER Ø8.4-Ø17X1.6	
55	852158	5	NYLOCKMUTTER M8 GALV	NYLOCK NUT M8 GALV.	
56	867091	5	RØRPINNE Ø10X57X38 M/LÅS	PIN	
57	221411	5	KJETTING Ø6.5-24X288	CHAIN	
58	810548	2	6KT.SKR.HELGJ. M10X40-8.8 GALV	HEX. BOLT M10X40-8.8 GALV	
58	860160	4	BRIKKE Ø10.5-Ø21X2	WASHER Ø10.5-Ø21X2	
58	850160	2	SEKSKANTMUTTER M10-8 GALV.	HEX. NUT M10-8 GALV.	
58	852160	2	NYLOCKMUTTER M10 GALV	NYLOCK NUT M10 GALV.	
59	813660	5	SEKSKANTSKRUE M12X60-8.8 GALV.	HEX. BOLT M12X60-8.8 GALV.	
59	860163	5	BRIKKE Ø13-Ø24X2.5	WASHER Ø13-Ø24X2.5	
59	852162	5	NYLOCKMUTTER M12 GALV	NYLOCK NUT M12 GALV	
65-72	**205204**	**5**	**HYPPESKJÆR 550**	**RIDGING SHOVEL 550**	
65	205208	1	KROPP 550	BODY 550	
66	205216	1	SPISS	POINT	
67	823525	2	PLOGSKRUE M10X25 8.8 GALV.	PLOUGH BOLT M10X25 8.8 GALV.	
67	860160	2	BRIKKE Ø10.5-Ø21X2	WASHER Ø10.5-Ø21X2	
67	850160	2	SEKSKANTMUTTER M10-8 GALV.	HEX. NUT M10-8 GALV.	
68	205230	1	VENSTRE VING	LEFT WING	
69	205231	1	HØYRE VING	RIGHT WING	
70	821530	4	LÅSESKRUE M10X30-4.6 GALV.	CARRIAGE BOLT M10X30-4.6 GALV	
70	270448	4	BRIKKE Ø11-Ø30X4	WASHER Ø11-Ø30X4	
71	813460	3	SEKSKANTSKRUE M8X60-8.8 GALV.	HEX. BOLT M8X60-8.8 GALV	
71	852158	3	NYLOCKMUTTER M8 GALV	NYLOCK NUT M8 GALV.	
72	813660	1	SEKSKANTSKRUE M12X60-8.8 GALV.	HEX. BOLT M12X60-8.8 GALV.	
72	852162	1	NYLOCKMUTTER M12 GALV	NYLOCK NUT M12 GALV	

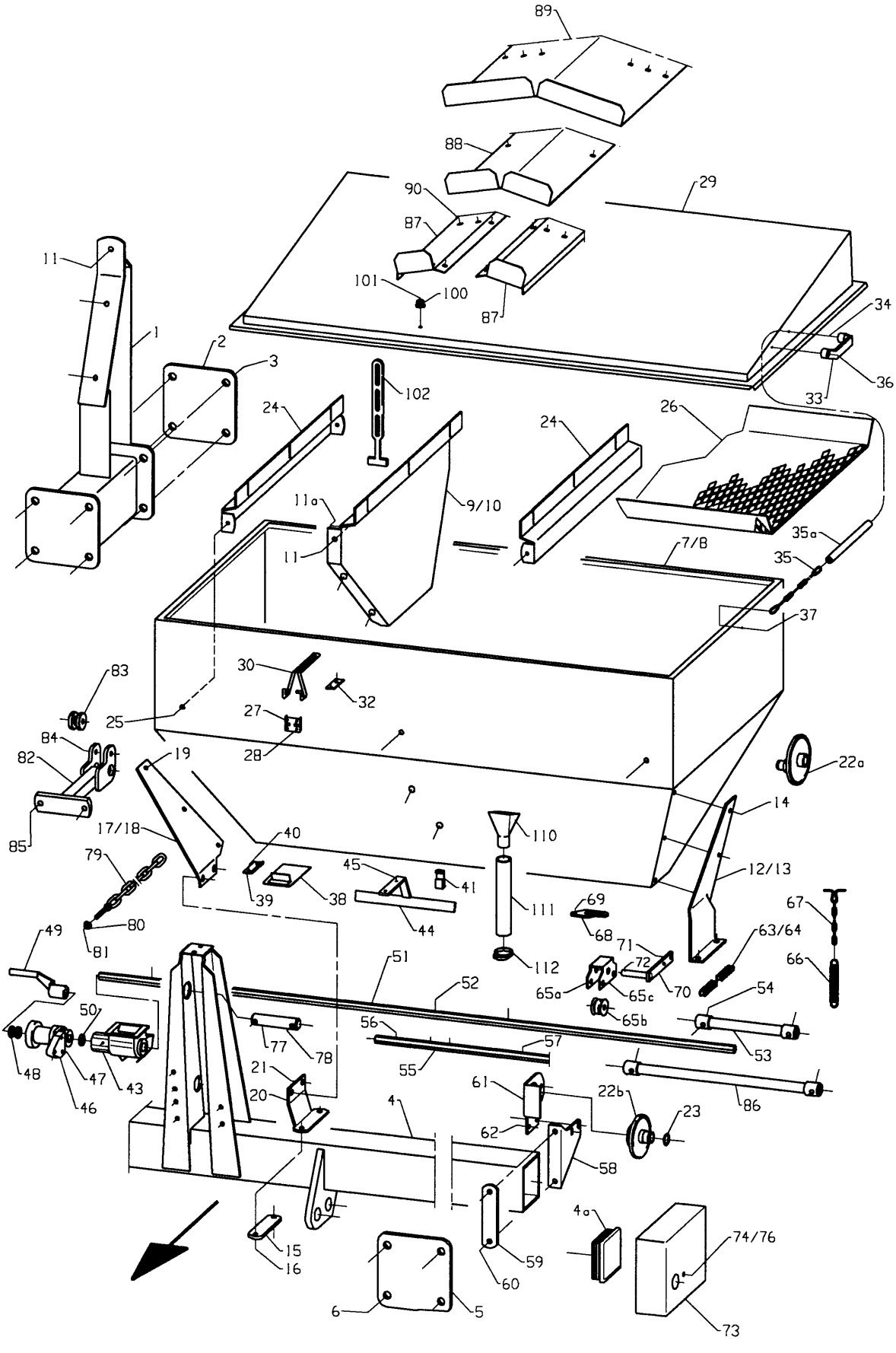
89
88
90
87
29
101
100
87
34
36
33
11
1
2
3
102
24
24
26
11a
9/10
11
7/8
35a
35
37
83
30
32
25
27
28
84
82
19
22a
14
85
17/18
40
110
79
45
41
12/13
39
38
111
69
67
80
44
68
63/64
49
81
71
72
66
51
112
65a
65c
70
52
54
50
65b
56
77
78
57
53
48
47
43
21
55
61
22b
86
46
20
4
23
62
58
4a
74/76
15
16
59
60
6
5
73

Fig. 14

Utgave: / Issue:	3	Redskap: / Implement:	POTETSETTER SLEPT 3200 POTATO PLANTER TRAILED 3200	Kverneland
Dato: / Date:	94-11	Enhet / Unit	RADGJØDSLER MED SKYVEVALSE FERTILIZER ATT., ROLLER TYPE	Fig nr.: 14

Ref. No.	Delenr. Part no.	Ant. Qty.	Gjenstand	Description	Anmerkning Note
1	217815	2	TANKFESTE	BRACKET FOR TANK	
2	217819	2	ENDEPLATE	PLATE	
3	814130	8	SEKSKANTSKRUE M20X180-8.8 GALV	HEX. BOLT M20X180-8.8 GALV	
3	860170	16	BRIKKE Ø21-Ø37X3	WASHER Ø21-Ø37X3	
3	852167	8	NYLOCKMUTTER M20 GALV	NYLOCK NUT M20 GALV	
4	217865	1	BOM R.GJØDSLER	BEAM	
4a	911301	2	ENDEPLUGG 120X120X6(5)	PLUG	
5	217819	2	ENDEPLATE	PLATE	
6	814130	8	SEKSKANTSKRUE M20X180-8.8 GALV	HEX. BOLT M20X180-8.8 GALV	
6	860170	16	BRIKKE Ø21-Ø37X3	WASHER Ø21-Ø37X3	
6	852167	8	NYLOCKMUTTER M20 GALV	NYLOCK NUT M20 GALV	
7	217803	1	GJØDSELBEHOLDER V.	FERTILIZER HOPPER LEFT	
8	217804	1	GJØDSELBEHOLDER H.	FERTILIZER HOPPER RIGHT	
9	217852	1	SKOTT V.	REINFORCEMENT LEFT	
10	217853	1	SKOTT H.	REINFORCEMENT RIGHT	
11	813630	6	SEKSKANTSKRUE M12X30-8.8 GALV.	HEX. BOLT M12X30-8.8 GALV.	
11a	205264	2	BRIKKE Ø13-Ø50X1.25	WASHER Ø13-Ø50X1.25	
11	860163	12	BRIKKE Ø13-Ø24X2.5	WASHER Ø13-Ø24X2.5	
11	217894	12	BRIKKE Ø12.5-4KT22X4	WASHER Ø12.5-4KT22X4	
11	852162	12	NYLOCKMUTTER M12 GALV	NYLOCK NUT M12 GALV	
12	217822	1	TANKFESTE YTRE V.	OUTER HOPPER BRACKET LEFT	
13	217823	1	TANKFESTE YTRE H.	OUTER HOPPER BRACKET RIGHT	
14	813525	6	SEKSKANTSKRUE M10X25-8.8 GALV.	HEX. BOLT M10X25-8.8 GALV.	
14	860160	12	BRIKKE Ø10.5-Ø21X2	WASHER Ø10.5-Ø21X2	
14	852160	6	NYLOCKMUTTER M10 GALV	NYLOCK NUT M10 GALV.	
15	215295	4	LASK 40X8-Ø13/133/Ø13	CLAMP 40X8-Ø13/133/Ø13	
16	813705	8	SEKSKANTSKRUE M12X150-8.8 GALV	HEX. BOLT M12X150-8.8	
16	860163	8	BRIKKE Ø13-Ø24X2.5	WASHER Ø13-Ø24X2.5	
16	852162	8	NYLOCKMUTTER M12 GALV	NYLOCK NUT M12 GALV	
17	217824	1	TANKFESTE INDRE V.	INNER HOPPER BRACKET LEFT	
18	217825	1	TANKFESTE INDRE H.	INNER HOPPER BRACKET RIGHT	
19	813525	6	SEKSKANTSKRUE M10X25-8.8 GALV.	HEX. BOLT M10X25-8.8 GALV.	
19	860160	12	BRIKKE Ø10.5-Ø21X2	WASHER Ø10.5-Ø21X2	
19	852160	6	NYLOCKMUTTER M10 GALV	NYLOCK NUT M10 GALV.	
20	217826	2	FOT	BRACKET	
21	813630	4	SEKSKANTSKRUE M12X30-8.8 GALV.	HEX. BOLT M12X30-8.8 GALV.	
21	860163	8	BRIKKE Ø13-Ø24X2.5	WASHER Ø13-Ø24X2.5	
21	852162	4	NYLOCKMUTTER M12 GALV	NYLOCK NUT M12 GALV	
22a	215806	1	KJEDEHJUL SV. 5/8" 26T	SPROCKET 5/8" 26T	
22b	215808	1	KJEDEHJULSATS SV 5/8"11-22T	SPROCKET ASSY 5/8"11-22T	
23	868430	1	LÅSERING UTV. A30X1.50	CIRCLIP A30X1.50	
24	217855	4	STØTTEPROFIL	GRID SUPPORT	
25	813420	8	SEKSKANTSKRUE M8X20-8.8 GALV.	HEX. BOLT M8X20-8.8 GALV	
25	860158	16	BRIKKE Ø8.4-Ø17X1.6	WASHER Ø8.4-Ø17X1.6	
25	852158	8	NYLOCKMUTTER M8 GALV	NYLOCK NUT M8 GALV.	
26	217856	2	RIST	GRID	
27	215867	4	HENGSLE PL.	HINGE	
28	862058	16	POPPNAGLE Ø4.8X14.5 ALUMINIUM	POP NAIL Ø4.8X14.5 ALU.	
29	217810	2	LOKK	COVER	
30	215868	4	HENGSLE	HINGE	
31	813416	8	SEKSKANTSKRUE M8X16-8.8 GALV.	HEX. BOLT M8X16-8.8 GALV.	
31	860158	8	BRIKKE Ø8.4-Ø17X1.6	WASHER Ø8.4-Ø17X1.6	
32	215869	4	SKINNE	BACK PLATE	
33	215875	4	HÅNDTAK	HANDLEBAR	
34	813420	6	SEKSKANTSKRUE M8X20-8.8 GALV.	HEX. BOLT M8X20-8.8 GALV	
34	860158	6	BRIKKE Ø8.4-Ø17X1.6	WASHER Ø8.4-Ø17X1.6	
35	217811	2	KJETTING Ø3-26X560	CHAIN Ø3-26X560	
35a	217812	4	GUMMISLANGE Ø12/Ø19X290	RUBBER TUBE	93-MOD.
36	813425	2	SEKSKANTSKRUE M8X25-8.8 GALV.	HEX. BOLT M8X25-8.8 GALV.	
36	860158	4	BRIKKE Ø8.4-Ø17X1.6	WASHER Ø8.4-Ø17X1.6	
37	813420	2	SEKSKANTSKRUE M8X20-8.8 GALV.	HEX. BOLT M8X20-8.8 GALV	

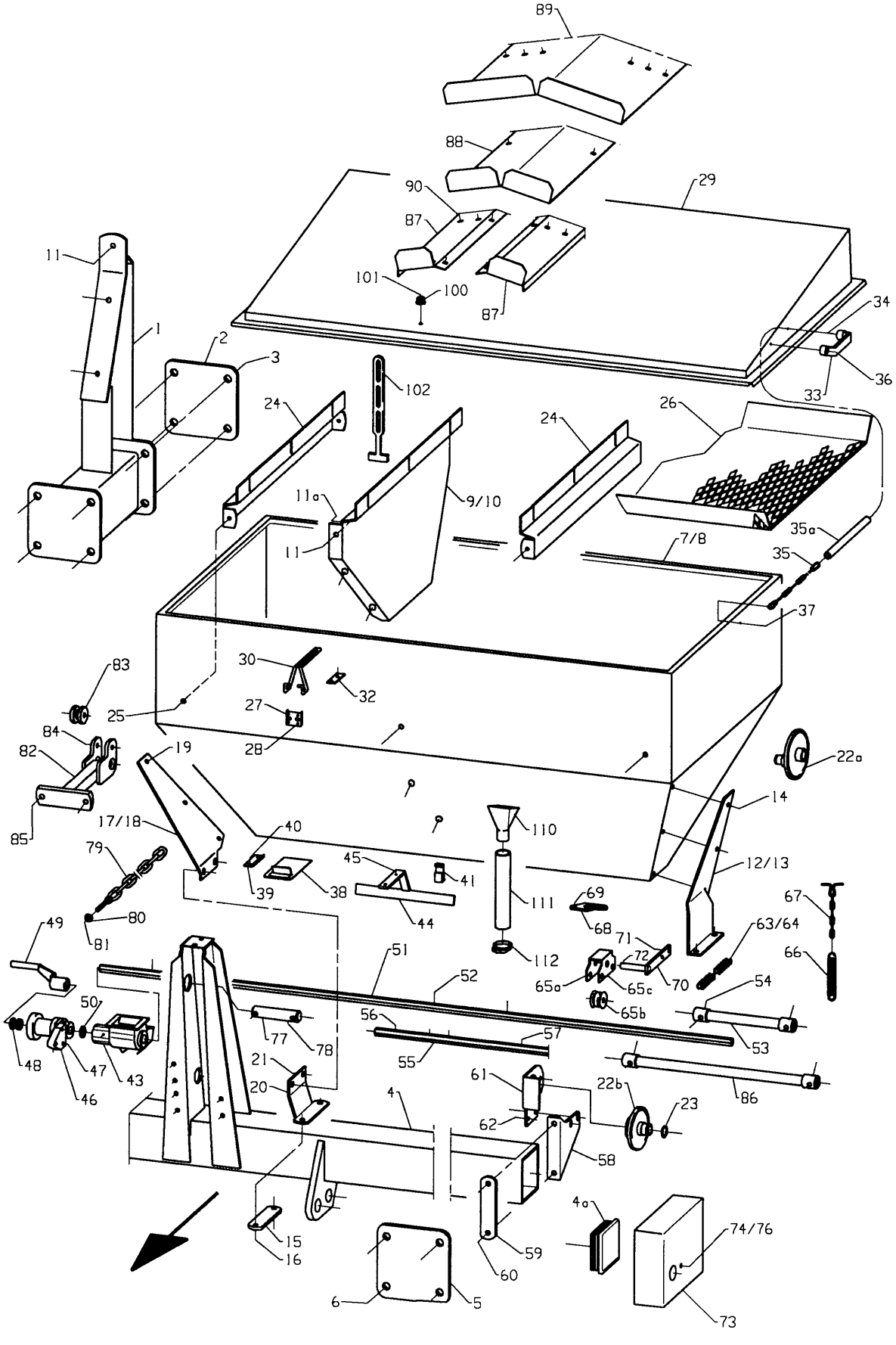
89
88
90
87
29
101
100
87
34
36
33
11
1
2
3
102
24
24
26
11a
9/10
11
7/8
35a
35
37
83
30
32
25
27
28
84
82
19
22a
14
85
17/18
40
110
79
45
41
12/13
39
38
111
69
67
80
44
68
63/64
49
81
71
72
66
51
112
65a
65c
70
52
54
50
56
65b
77
78
57
53
48
47
43
21
55
61
22b
86
46
20
4
23
62
58
4a
74/76
15
16
59
60
6
5
73

Fig. 14

Utgave: Issue: 3	Redskap: Implement: POTETSETTER SLEPT 3200 / POTATO PLANTER TRAILED 3200	Kverneland
Dato: Date: 94-11	Enhet Unit: RADGJØDSLER MED SKYVEVALSE / FERTILIZER ATT., ROLLER TYPE	Fig nr.: 14

Ref. No.	Delenr. Part no.	Ant. Qty.	Gjenstand	Description	Anmerkning Note
37	860158	4	BRIKKE Ø8.4-Ø17X1.6	WASHER Ø8.4-Ø17X1.6	
38	215857	2	TØMMELUKE	DISCHARGE HATCH	
39	215866	16	KLEMMPLATE	CLAMP	
40	860155	32	BRIKKE Ø6.6-Ø18X1.5	WASHER Ø6.6-Ø18X1.5	
40	837616	32	RUNDH.SKR.KR.SP.S.GJ.M6X16 GLV	PAN SCREW THREADED M6X16	
41	215876	8	KROK	CONNECTING PIECE	
43	215878	8	SÅHUS	FERTILIZER FEED HOUSING	
44	215814	4	SÅTRAKTHOLDER	FUNNEL HOLDER	
45	860155	8	BRIKKE Ø6.6-Ø18X1.5	WASHER Ø6.6-Ø18X1.5	
45	837616	8	RUNDH.SKR.KR.SP.S.GJ.M6X16 GLV	PAN SCREW THREADED M6X16	
46	215879	1	INNSTILLINGSHÅNDTAK KPL.	FEED RATE ADJUSTMENT UNIT	
47	813440	3	SEKSKANTSKRUE M8X40-8.8 GALV.	HEX. BOLT M8X40-8.8 GALV.	
47	860158	12	BRIKKE Ø8.4-Ø17X1.6	WASHER Ø8.4-Ø17X1.6	
47	852158	3	NYLOCKMUTTER M8 GALV	NYLOCK NUT M8 GALV.	
48	215880	1	BRIKKE	WASHER	
49	215881	1	INNSÅINGSHÅNDTAK	FEED RATE TRIAL HANDLE	
50	215882	2	BRIKKE	WASHER	
51	217892	1	AKSEL V.	LEFT SHAFT	
52	841013	4	SENK.SKR.M/KR.SP.S.GJ. 3.5X13	PAN SCREW 3.5X13	
53	217885	1	AKSELFORLENGER 70-80 SV.	AXLE EXTENTIONER	
54	831612	4	GJENGESTIFT 6KT.HOL M12X12	PIN SCREW M12X12	
55	217893	1	AKSEL H.	RIGHT SHAFT	
56	865225	2	SPLINT 4X25 GALV.	SPLIT PIN 4 X 25	
57	841013	4	SENK.SKR.M/KR.SP.S.GJ. 3.5X13	PIN SCREW 3.5X13	
58	217884	1	LAGERFESTE	BEARING BRACKET	
59	215295	1	LASK 40X8-Ø13/133/Ø13	CLAMP 40X8-Ø13/133/Ø13	
60	813705	2	SEKSKANTSKRUE M12X150-8.8 GALV	HEX. BOLT M12X150-8.8	
60	860163	2	BRIKKE Ø13-Ø24X2.5	WASHER Ø13-Ø24X2.5	
60	852162	2	NYLOCKMUTTER M12 GALV	NYLOCK NUT M12 GALV	
61	215809	1	LAGERHOLDER KOMPL.	BUSH RETAINER ASSY	
62	813425	2	SEKSKANTSKRUE M8X25-8.8 GALV.	HEX. BOLT M8X25-8.8 GALV.	
62	860158	4	BRIKKE Ø8.4-Ø17X1.6	WASHER Ø8.4-Ø17X1.6	
62	852158	2	NYLOCKMUTTER M8 GALV	NYLOCK NUT M8 GALV.	
63	901642	1	RULLEKJEDE 5/8"X1572	CHAIN 5/8"X1572	
64	901602	1	RULLEKJEDELÅS 5/8"	CONNECTING LINK 5/8"	
65a-65c	**215255**	**1**	**KJEDESTRAMMER KOMPL.**	**CHAIN TENSIONER ASSY**	
65a	215256	1	HJULHOLDER	ROLLER BRACKET	
65b	222726	2	TRINSE	CHAIN ROLLER	
65c	813650	2	SEKSKANTSKRUE M12X50-8.8 GALV.	HEX. BOLT M12X50-8.8 GALV.	
65c	852162	2	NYLOCKMUTTER M12 GALV	NYLOCK NUT M12 GALV	
66	311745	1	STREKKFJØR Ø2.5-Ø20X130	SPRING	
67	215888	1	KJETTING Ø3-26X416	CHAIN Ø3-26X416	
68	217896	1	STRAMMEØRE	BRACKET	
69	813425	1	SEKSKANTSKRUE M8X25-8.8 GALV.	HEX. BOLT M8X25-8.8 GALV.	
69	860158	2	BRIKKE Ø8.4-Ø17X1.6	WASHER Ø8.4-Ø17X1.6	
69	852158	1	NYLOCKMUTTER M8 GALV	NYLOCK NUT M8 GALV.	
70	215807	1	KJEDESTRAMMEARM SV	CHAIN TENSIONER	
71	813425	1	SEKSKANTSKRUE M8X25-8.8 GALV.	HEX. BOLT M8X25-8.8 GALV.	
71	860158	2	BRIKKE Ø8.4-Ø17X1.6	WASHER Ø8.4-Ø17X1.6	
71	852158	1	NYLOCKMUTTER M8 GALV	NYLOCK NUT M8 GALV.	
72	865225	1	SPLINT 4X25 GALV.	SPLIT PIN 4 X 25	
73	215905	1	KJEDESKJERM	CHAIN GUARD	
74	855380	1	STJERNERATT M10	HANDWHEEL M10	
74	813535	1	SEKSKANTSKRUE M10X35-8.8 GALV.	HEX. BOLT M10X35-8.8 GALV.	
74	852160	1	NYLOCKMUTTER M10 GALV	NYLOCK NUT M10 GALV.	
74	256571	1	MUTTER	NUT	
76	860160	1	BRIKKE Ø10.5-Ø21X2	WASHER Ø10.5-Ø21X2	
76	813520	1	SEKSKANTSKRUE M10X20-8.8 GALV.	HEX. BOLT M10X20-8.8 GALV.	
77	217271	1	BOLT Ø30-Ø12/100/Ø12	BOLT	
78	867061	2	RINGPINNE Ø12 (7/16") ELZN	RING PIN 12 (7/16") GALV.	
79	217528	1	STREKK-KJETTING LANG SV.	TENSION CHAIN	

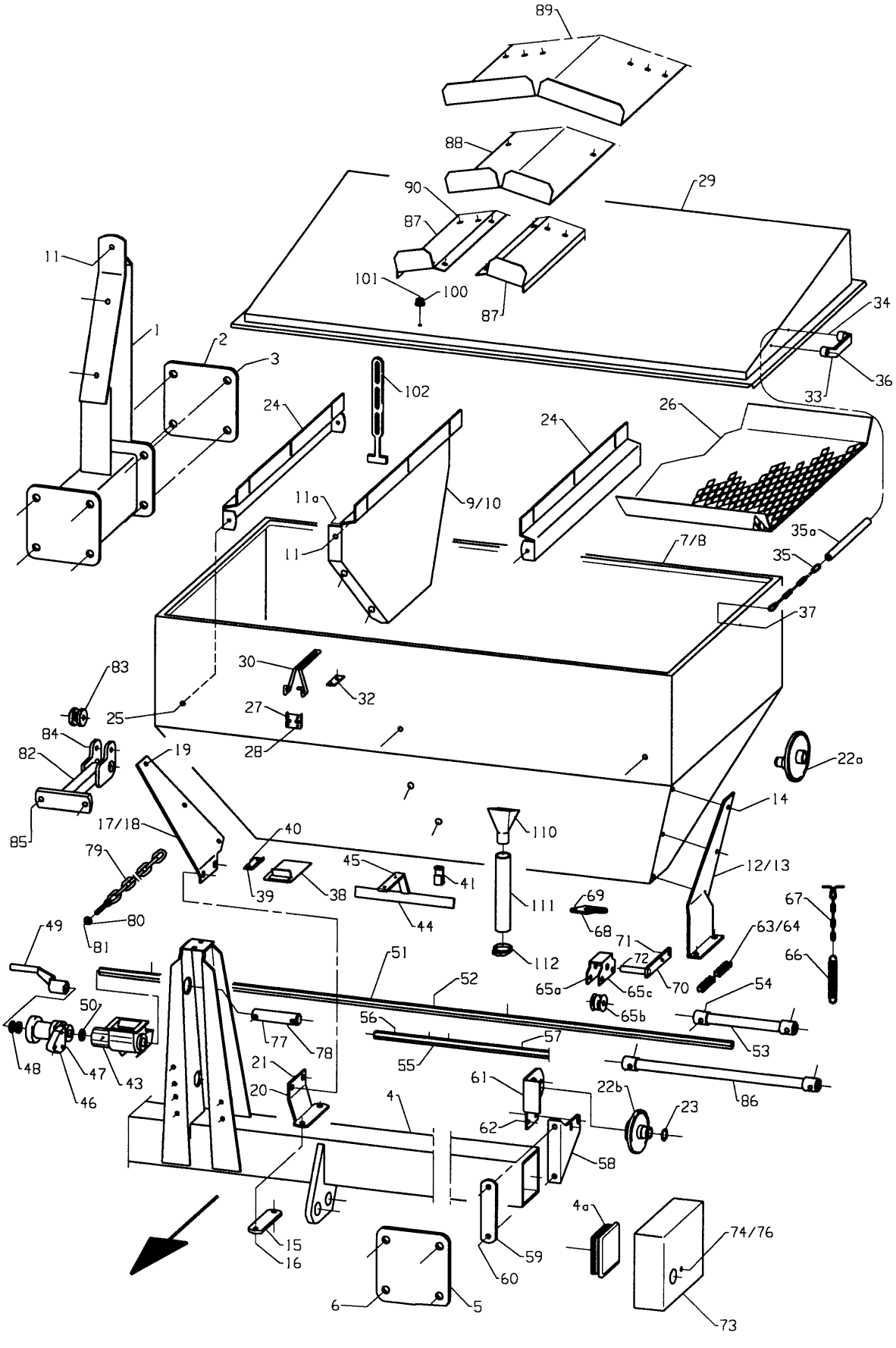
89
88
90
87
29
101
100
87
34
36
33
11
1
2
3
102
24
24
26
11a
9/10
11
7/8
35a
35
37
83
30
32
25
27
28
84
82
19
22a
14
85
17/18
40
110
79
45
41
12/13
39
38
111
69
67
80
44
68
63/64
49
81
71
72
66
51
112
65a
65c
70
52
54
50
65b
56
77
78
57
53
48
47
43
21
55
61
22b
86
46
20
4
23
62
58
4a
74/76
15
16
59
60
6
5
73

Fig. 14

Utgave: / Issue:	3	Redskap: / Implement:	POTETSETTER SLEPT 3200 POTATO PLANTER TRAILED 3200	Kverneland
Dato: / Date:	94-11	Enhet / Unit	RADGJØDSLER MED SKYVEVALSE FERTILIZER ATT., ROLLER TYPE	Fig nr.: 14

Ref. No.	Delenr. Part no.	Ant. Qty.	Gjenstand	Description	Anmerkning Note
80	860160	1	BRIKKE Ø10.5-Ø21X2	WASHER Ø10.5-Ø21X2	
81	852160	1	NYLOCKMUTTER M10 GALV	NYLOCK NUT M10 GALV.	
82-84	**217870**	**1**	**TOPPSTAG KOMPL.**	**STAY ASSY**	
82	217871	1	TOPPSTAG	STAY	
83	219622	1	RULL	CHAIN ROLLER	
84	866650	1	SPENNHYLSE 12X50 ELZN	TENSION PIN 12X50X2.5	
85	813640	2	SEKSKANTSKRUE M12X40-8.8 GALV.	HEX. BOLT M12X40-8.8 GALV	
85	860163	2	BRIKKE Ø13-Ø24X2.5	WASHER Ø13-Ø24X2.5	
85	852162	2	NYLOCKMUTTER M12 GALV	NYLOCK NUT M12 GALV	
86	217886	1	AKSELFORLENGER 85-90	SHAFT EXTENTION	
			GJØDSELSAMLER KOMPL.	**COVER ASSY**	
87	217908	2	PROFILPLATE	PROFILE PLATE	
88	217909	2	PLATE MIDTRE	CENTRE PLATE	
89	217910	1	PLATE ØVRE	UPPER PLATE	
90	821525	12	LÅSESKRUE M10X25-4.6 GALV.	CARRIAGE BOLT M10X25-4.6 GALV.	
90	860164	12	BRIKKE Ø14-Ø28X3	WASHER Ø14-Ø28X3	
90	860160	12	BRIKKE Ø10.5-Ø21X2	WASHER Ø10.5-Ø21X2	
90	852160	12	NYLOCKMUTTER M10 GALV	NYLOCK NUT M10 GALV.	
100	306287	4	HOLDER PLAST	KNOB	93-MOD.
101	839325	4	SENKSKRUE KRYSSPOR M6X25 GALV.	COUNTER SUNK SCREW M6 X 25	
101	852156	4	NYLOCKMUTTER M6 GALV	NYLOCK NUT M6 GALV.	
101	860156	4	BRIKKE Ø6.6-Ø12X1.5	WASHER Ø6.6-Ø12X1.5	
102	306251	2	GUMMISTROPP	RUBBER STRAP	93-MOD.
110-112	**215910**	**8**	**SÅTRAKT KOMPL.**	**FUNNEL HOLDER ASSY**	**93-MOD.**
110	215911	1	TRAKT Ø37.5	FUNNEL	"
111	215913	1	SÅSLANGE Ø32 KLAR PLAST	FUNNEL TUBE CLEAR PLASTIC	"
112	215955	1	SLANGEKLEMME PLAST Ø44	HOSE CLIP PLASTIC	"

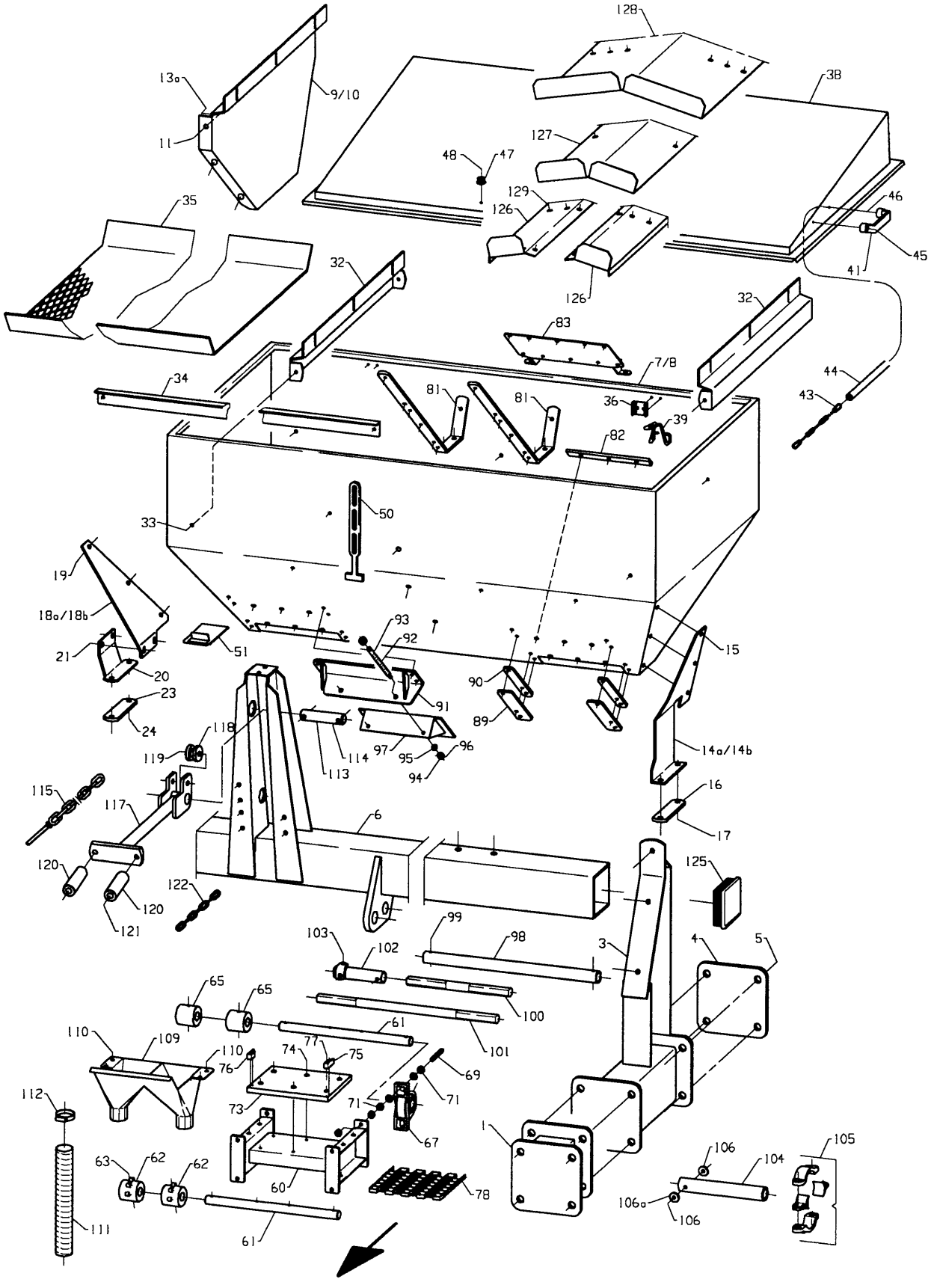
128
13a
9/10
38
11
127
48
47
129
126
46
35
45
41
32
126
32
83
7/8
34
81
81
36
39
44
43
82
50
33
19
18a/18b
93
92
15
21
51
20
90
23
91
89
24
118
97
96
14a/14b
119
114
95
113
94
115
117
16
6
17
120
125
122
120
121
99
103
102
98
3
4
5
65
65
100
61
110
109
110
74
77
75
101
76
69
112
73
71
71
67
1
63
62
62
60
78
106
104
105
106a
106
111
61

Fig. 15

Utgave: Issue: 3	Redskap: Implement: POTETSETTER SLEPT 3200 / POTATO PLANTER TRAILED 3200	Kverneland
Dato: Date: 94-11	Enhet Unit: RADGJØDSLER MED BELTEUTMATER / FERTILIZER HOPPER WITH BELT FEEDER	Fig nr.: 15

Ref. No.	Delenr. Part no.	Ant. Qty.	Gjenstand	Description	Anmerkning Note
1	218130	2	RAMMEFORLENGELSE 100MM SV.	FRAME EXTENTIONER 100MM	
2	814060	8	SEKSKANTSKRUE M20X60-8.8 ELZN	HEX. BOLT M20x60-8.8 GALV.	
2	860170	16	BRIKKE Ø21-Ø37X3 ELZN	WASHER Ø21-Ø37X3	
2	852167	8	NYLOCKMUTTER M20 ELZN.	NYLOCK NUT M20 GALV	
3	217815	2	TANKFESTE SV.	BRACKET FOR TANK	
4	217819	4	ENDEPLATE	PLATE	
5	814130	16	SEKSKANTSKRUE M20X180-8.8 ELZN	HEX. BOLT M20X180-8.8 GALV	
5	860170	32	BRIKKE Ø21-Ø37X3 ELZN	WASHER Ø21-Ø37X3	
5	852167	16	NYLOCKMUTTER M20 ELZN.	NYLOCK NUT M20 GALV	
6	217865	1	BOM R.GJØDSLER SV.	BEAM	
7	218103	1	GJØDSELBEHOLDER V. SV.	FERTILIZER HOPPER LEFT	
8	218104	1	GJØDSELBEHOLDER H. SV.	FERTILIZER HOPPER RIGHT	
9	217852	1	SKOTT V.	REINFORCEMENT LEFT	
10	217853	1	SKOTT H.	REINFORCEMENT RIGHT	
11	813630	6	SEKSKANTSKRUE M12X30-8.8 ELZN	HEX. BOLT M12X30-8.8 GALV.	
12	813635	6	SEKSKANTSKRUE M12X35-8.8 ELZN	HEX. BOLT M12X35-8.8 GALV	
13a	205264	2	BRIKKE Ø13-Ø50X1.25	WASHER Ø13-Ø50X1.25	
13b	860163	12	BRIKKE Ø13-Ø24X2.5 ELZN	WASHER Ø13-Ø24X2.5	
13c	217894	12	BRIKKE Ø12.5-4KT22X4 GALV	WASHER	
13d	852162	12	NYLOCKMUTTER M12 ELZN.	NYLOCK NUT M12 GALV	
14a	218122	1	TANKFESTE YTRE V.	OUTER HOPPER BRACKET LH	
14b	218123	1	TANKFESTE YTRE H.	OUTER HOPPER BRACKET RH	
15	813525	6	SEKSKANTSKRUE M10X25-8.8 ELZN	HEX. BOLT M10X25-8.8 GALV.	
15	860160	12	BRIKKE Ø10.5-Ø21X2 ELZN	WASHER Ø10.5-Ø21X2	
15	852160	6	NYLOCKMUTTER M10 ELZN.	NYLOCK NUT M10 GALV.	
16	215295	1	LASK 40X8-Ø13/133/Ø13	CLAMP 40X8-Ø13/133/Ø13	
17	813705	2	SEKSKANTSKRUE M12X150-8.8 ELZN	HEX. BOLT M12X150-8.8	
17	860163	2	BRIKKE Ø13-Ø24X2.5 ELZN	WASHER Ø13-Ø24X2.5	
17	852162	2	NYLOCKMUTTER M12 ELZN.	NYLOCK NUT M12 GALV	
18a	218124	1	TANKFESTE INDRE V.	INNER HOPPER BRACKET LH	
18b	218125	1	TANKFESTE INDRE H.	INNER HOPPER BRACKET RH	
19	813525	6	SEKSKANTSKRUE M10X25-8.8 ELZN	HEX. BOLT M10X25-8.8 GALV.	
19	860160	12	BRIKKE Ø10.5-Ø21X2 ELZN	WASHER Ø10.5-Ø21X2	
19	852160	6	NYLOCKMUTTER M10 ELZN.	NYLOCK NUT M10 GALV.	
20	217826	2	FOT	BRACKET	
21	813630	4	SEKSKANTSKRUE M12X30-8.8 ELZN	HEX. BOLT M12X30-8.8 GALV.	
21	860163	8	BRIKKE Ø13-Ø24X2.5 ELZN	WASHER Ø13-Ø24X2.5	
21	852162	4	NYLOCKMUTTER M12 ELZN.	NYLOCK NUT M12 GALV	
23	215295	4	LASK 40X8-Ø13/133/Ø13	CLAMP 40X8-Ø13/133/Ø13	
24	813705	8	SEKSKANTSKRUE M12X150-8.8 ELZN	HEX. BOLT M12X150-8.8	
24	860163	8	BRIKKE Ø13-Ø24X2.5 ELZN	WASHER Ø13-Ø24X2.5	
24	852162	8	NYLOCKMUTTER M12 ELZN.	NYLOCK NUT M12 GALV	
32	217855	4	STØTTEPROFIL	GRID SUPPORT	
33	813420	8	SEKSKANTSKRUE M8X20-8.8 ELZN	HEX. BOLT M8X20-8.8 GALV	
33	860158	16	BRIKKE Ø8.4-17X1.6 ELZN	WASHER Ø8.4-Ø17X1.6	
33	852158	8	NYLOCKMUTTER M8 ELZN.	NYLOCK NUT M8 GALV.	
34	217857	6	STØTTEVINKEL	GRID SUPPORT	
35	217856	2	RIST	GRID	
36	215867	4	HENGSLE PL.	HINGE	
37	862058	16	POPPNAGLE Ø4.8X14.5 ALUMINIUM	POP NAIL Ø4.8X14.5 ALU.	
38	217810	2	LOKK SV.	COVER	
39	215868	4	HENGSLE	HINGE	
40	813416	8	SEKSKANTSKRUE M8X16-8.8 ELZN	HEX. BOLT M8X16-8.8 GALV.	
40a	215869	4	SKINNE	BACK PLATE	
41	215875	4	HÅNDTAK	GRIP	
42	813420	6	SEKSKANTSKRUE M8X20-8.8 ELZN	HEX. BOLT M8X20-8.8 GALV	
42	860158	6	BRIKKE Ø8.4-17X1.6 ELZN	WASHER Ø8.4-Ø17X1.6	
43	217811	2	KJETTING Ø3-26X650	CHAIN	
44	217812	4	GUMMISLANGE Ø12/Ø19X290	RUBBER TUBE	

Kverneland

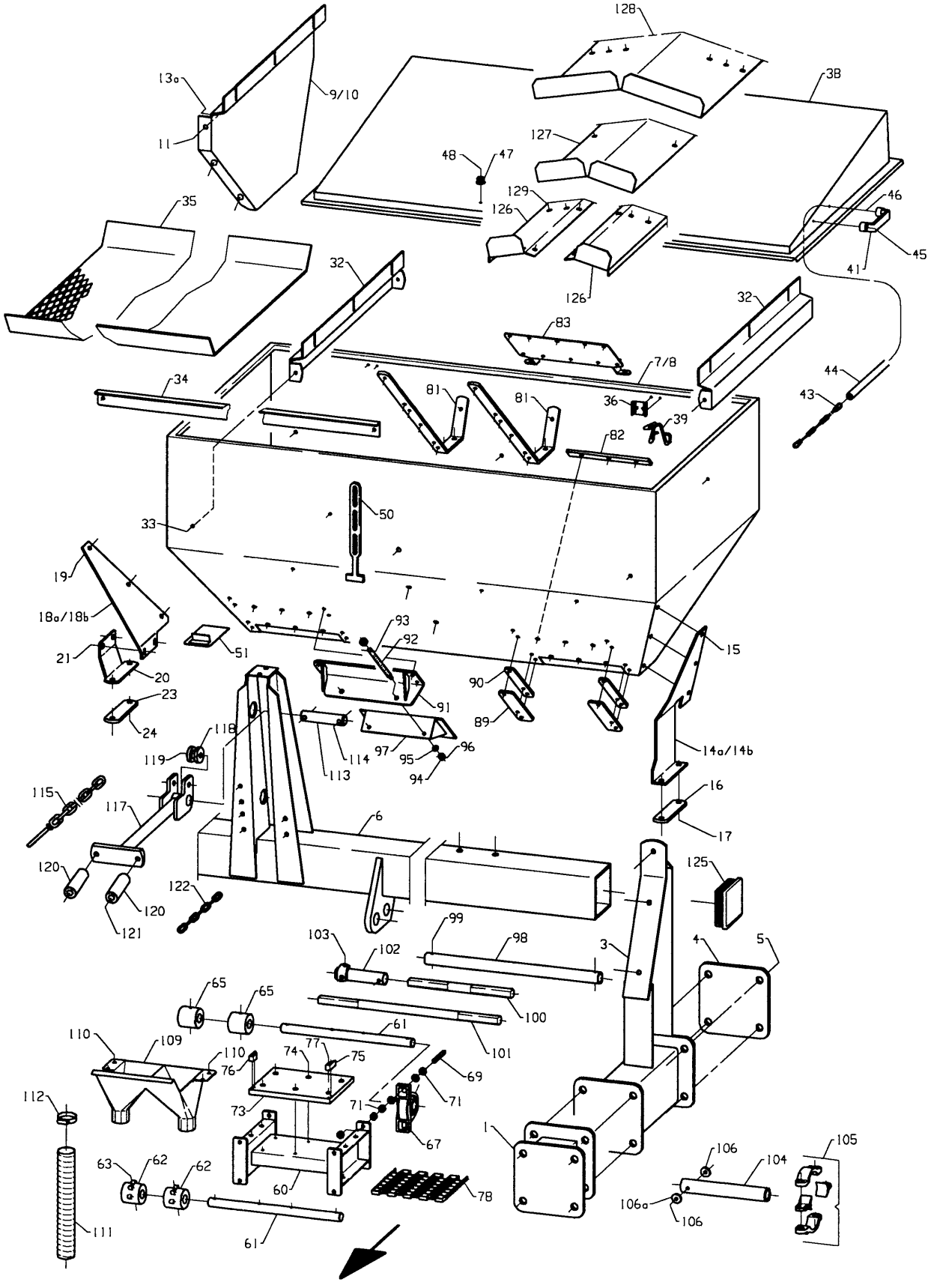

Fig. 15

Utgave: / Issue: 3	Redskap: / Implement: POTETSETTER SLEPT 3200 / POTATO PLANTER TRAILED 3200	Kverneland
Dato: / Date: 94-11	Enhet / Unit RADGJØDSLER MED BELTEUTMATER / FERTILIZER HOPPER WITH BELT FEEDER	Fig nr.: 15

Ref. No.	Delenr. Part no.	Ant. Qty.	Gjenstand	Description	Anmerkning Note
45	813425	2	SEKSKANTSKRUE M8X25-8.8 ELZN	HEX. BOLT M8X25-8.8 GALV.	
45	860158	4	BRIKKE Ø8.4-17X1.6 ELZN	WASHER Ø8.4-Ø17X1.6	
46	813420	2	SEKSKANTSKRUE M8X20-8.8 ELZN	HEX. BOLT M8X20-8.8 GALV	
46	860158	4	BRIKKE Ø8.4-17X1.6 ELZN	WASHER Ø8.4-Ø17X1.6	
47	306287	4	HOLDER PLAST	KNOB	
48	839325	4	SENKSKRUE KRYSSPOR M6X25 GALV.	COUNTER SUNK SCREW M6 X 25	
48	852156	4	NYLOCKMUTTER M6 ELZN.	NYLOCK NUT M6 GALV.	
48	860156	4	BRIKKE Ø6.6-Ø12X1.5 ELZN	WASHER Ø6.6-Ø12X1.5	
50	306251	2	GUMMISTROPP	RUBBER STRAP	
51	215857	2	TØMMELUKE	DISCHARGE HATCH	
60-78	**218150**	**4**	**GJØDSELUTMATER M/BELTE MONT.**	**FERTILIZER BELT FEEDER ASSY.**	
60	218155	1	GJØDSELUTMATERRAMME SV.	FEEDER BELT FRAME	
61	218140	2	BELTEAKSEL Ø25X380	SHAFT Ø25X380	
62	218145	2	BELTEDRIVHJUL Ø57.5 8T-Ø25	DRIVE WHEEL Ø57.5 8T-Ø25	
63	866455	4	SPENNHYLSE 8X55	LOCK PIN 8X55	
65	218147	2	BELTEFRIHJUL Ø57.5-Ø25X50	IDLE ROLLER Ø57.5-Ø25x50	
67	870173	4	KULELAGER SKF-SY25TF	BALL BEARING SKF-SY25TF	
68	813545	4	SEKSKANTSKRUE M10X45-8.8 ELZN	HEX. BOLT M10X45 8.8	
68	860160	8	BRIKKE Ø10.5-Ø21X2 ELZN	WASHER Ø10.5-Ø21X2	
68	852160	4	NYLOCKMUTTER M10 ELZN.	NYLOCK NUT M10 GALV.	
69	218153	4	STILLSKRUE M10X80 RUSTFRI	ADJUSTMENT SCREW M10X80	
70	860160	12	BRIKKE Ø10.5-Ø21X2 ELZN	WASHER Ø10.5-Ø21X2	
70	852160	4	NYLOCKMUTTER M10 ELZN.	NYLOCK NUT M10 GALV.	
70	850160	4	SEKSKANTMUTTER M10-8 ELZN.	HEX. NUT M10-8 GALV.	
71	850161	8	SEKSKANTMUTTER M10 RUSTFRI	HEX. NUT M10	
73	218162	1	GLIDEPLATE PLAST	SLIDING PLATE PTASTIC	
74	839864	6	SENKSKRUE M/SPOR M6X25 RUSTFRI	PAN SCREW M6X25	
74	860155	6	BRIKKE Ø6.4-Ø18X1.5 ELZN	WASHER Ø6.6-Ø18X1.5	
74	852156	6	NYLOCKMUTTER M6 ELZN.	NYLOCK NUT M6 GALV.	
75	218163	1	SIDESTYRING PLAST V.	BELT GUIDE LH	
76	218164	1	SIDESTYRING PLAST H.	BELT GUIDE RH	
77	841014	4	SENKSKR.M/KR.SP.S.GJ.3.5X25	PAN SCREW 3.5X25	
78	218210	1	GJØDSELUTMATERBELTE 8"X34" KPL	FERT. FEEDING BELT 8"x34" ASSY	
80	813535	16	SEKSKANTSKRUE M10X35-8.8 ELZN	HEX. BOLT M10X35-8.8 GALV.	
80	860160	32	BRIKKE Ø10.5-Ø21X2 ELZN	WASHER Ø10.5-Ø21X2	
80	852160	16	NYLOCKMUTTER M10 ELZN.	NYLOCK NUT M10 GALV.	
81	218106	8	AVSTIVER 32X8	REINFORCEMENT BAR	
82	218107	8	TVERRSTIVER 32X8	BAR	
83	218109	4	UTLØPSSKJERM	GATE PLATE	
84	827225	24	SENKSKRUE M/6KT.HOL M8X25-10.9	COUNTERSUNK BOLT M8X25-10.9	
85	813440	24	SEKSKANTSKRUE M8X40-8.8 ELZN	HEX. BOLT M8X40-8.8 GALV.	
86	813430	16	SEKSKANTSKRUE M8X30-8.8 ELZN	HEX. BOLT M8X30-8.8 GALV.	
87	813425	16	SEKSKANTSKRUE M8X25-8.8 ELZN	HEX. BOLT M8X25-8.8 GALV.	
88	860158	136	BRIKKE Ø8.4-17X1.6 ELZN	WASHER Ø8.4-Ø17X1.6	
89	218170	8	PORTSLEIDE	GATE SLIDE	
90	218171	8	SIDESTYRING PLAST	GATE GUIDE	
91	218173	4	FESTE SV.	BRACKET	
92	218178	8	STILLSKRUE M12X235 RUSTFRI	ADJUSTMENT SCREW M12X235	
93	866305	8	SPENNHYLSE 5X55	TENSION PIN 5X55	
94	218179	8	STOPPRING Ø8 RUSTFRI	STOP RING Ø8	
95	860158	8	BRIKKE Ø8.4-17X1.6 ELZN	WASHER Ø8.4-Ø17X1.6	
96	866220	8	SPENNHYLSE 4X20	LOCK PIN 4X20	
97	218165	4	UTMATERPORT SV.	FEEDING GATE	
98	218141	2	DRIVHYLSE Ø25.7/Ø33.7X498	DRIVE SHAFT COLLAR	
99	866440	4	SPENNHYLSE 8X40	TENSION PIN 8X40X1.5	
100	218245	1	DRIVAKSEL Ø25X295	DRIVE SHAFT Ø25X295	
101	218244	1	DRIVAKSEL Ø25X520	DRIVE SHAFT Ø25X520	
102	218241	2	DRIVAKSELHYLSE Ø25X140 SV.	DRIVE SHAFT COLLAR Ø25X140	
103	831616	4	GJENGESTIFT 6KT.HOL M12X16	HEADLESS SCREW M12X16	

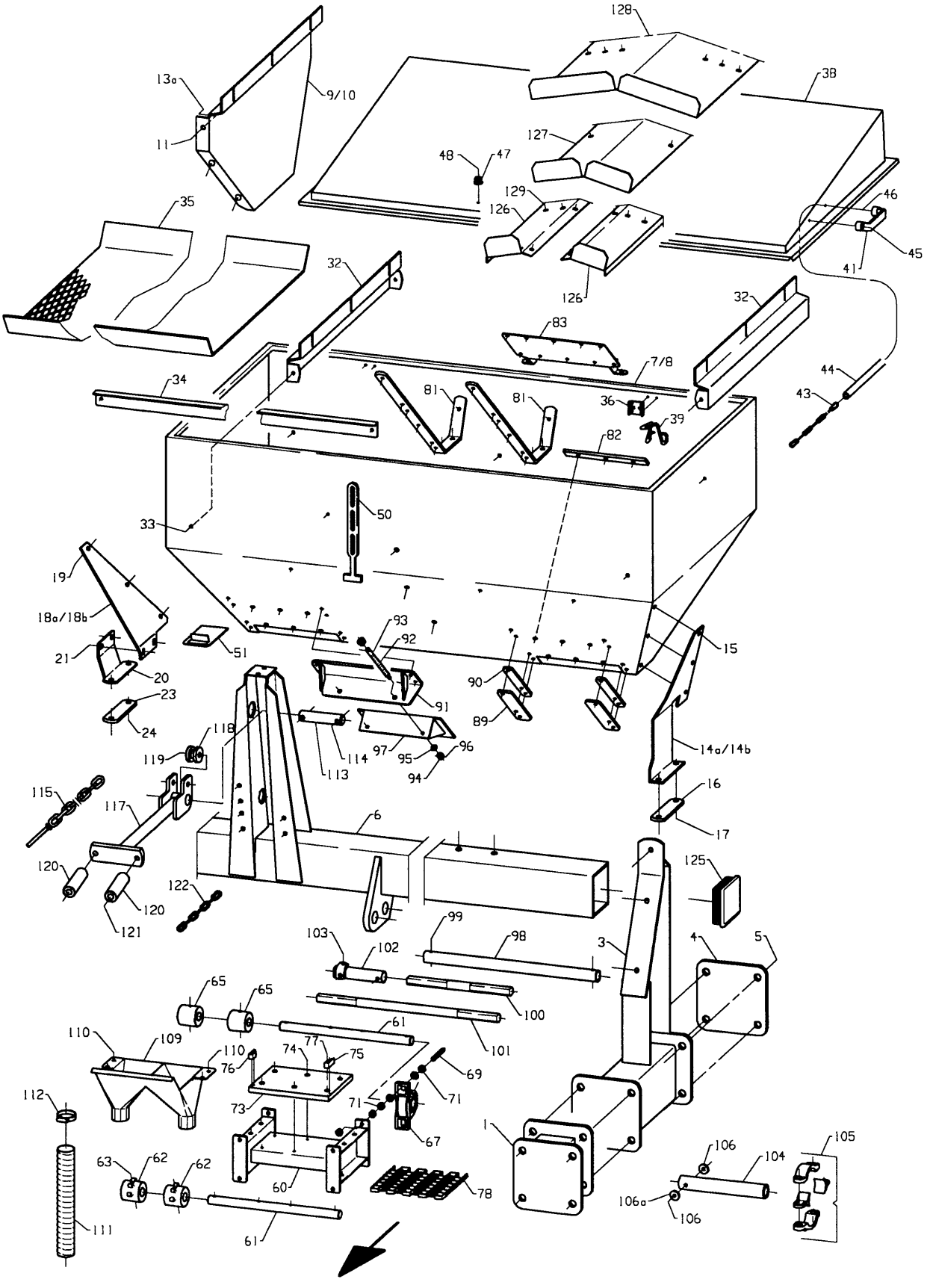
128
13a
9/10
38
11
127
48
47
129
126
46
35
45
41
32
126
32
83
7/8
34
81
81
36
39
44
43
82
50
33
19
18a/18b
93
92
15
21
51
20
90
23
91
89
24
118
97
96
14a/14b
119
114
95
113
94
115
16
117
6
17
120
125
122
120
121
99
103
102
98
3
4
5
65
65
100
61
110
109
110
74
77
75
101
76
69
112
73
71
71
67
1
106
105
63
62
62
104
60
78
106a
106
111
61

Fig. 15

Utgave: / Issue: 3	Redskap: / Implement: POTETSETTER SLEPT 3200 / POTATO PLANTER TRAILED 3200	Kverneland
Dato: / Date: 94-11	Enhet / Unit RADGJØDSLER MED BELTEUTMATER / FERTILIZER HOPPER WITH BELT FEEDER	Fig nr.: 15

Ref. No.	Delenr. Part no.	Ant. Qty.	Gjenstand	Description	Anmerkning Note
104-106	**218240**	**1**	**DRIVHYLSE Ø25X242 KPL.**	**DRIVE HOSE Ø25X242 ASSY**	
104	218242	1	DRIVHYLSE HYDR.SLANGE 1"X242	DRIVE HYDR. HOSE 1"X242	
105	218247	1	SLANGEKLEMME HD Ø38	HOSE CLIP HD Ø38	
106	813455	1	SEKSKANTSKRUE M8X55-8.8 ELZN.R	HEX. BOLT M8X55-8.8 GALV	
106a	303708	2	BRIKKE Ø9-Ø28X5	WASHER Ø9-Ø28X5	
106	852158	1	NYLOCKMUTTER M8 ELZN.	NYLOCK NUT M8 GALV.	
109	218115	4	UTLØPSTRAKT	FUNNEL	
110	813420	4	SEKSKANTSKRUE M8X20-8.8 ELZN	HEX. BOLT M8X20-8.8 GALV	
110	860158	8	BRIKKE Ø8.4-17X1.6 ELZN	WASHER Ø8.4-Ø17X1.6	
110	852158	4	NYLOCKMUTTER M8 ELZN.	NYLOCK NUT M8 GALV.	
111	215914	8	SÅSLANGE Ø45 SPIRALFLEX	FEED TUBE	
112	403534	8	SLANGEKLEMME Ø50	PLASTIC HOSE CLIPS	
113	217271	1	BOLT Ø30-Ø12/100/Ø12	BOLT	
114	867061	2	RINGPINNE Ø12 (7/16") ELZN	RING PIN 12 (7/16") GALV.	
115	217528	1	STREKK-KJETTING LANG SV.	TENSION CHAIN	
116	860160	1	BRIKKE Ø10.5-Ø21X2 ELZN	WASHER Ø10.5-Ø21X2	
116	852160	1	NYLOCKMUTTER M10 ELZN.	NYLOCK NUT M10 GALV.	
117-119	**217870**	**1**	**TOPPSTAG KOMPL.**	**STAY ASSY**	
117	217871	1	TOPPSTAG SV.	STAY	
118	219622	1	RULL	CHAIN ROLLER	
119	866650	1	SPENNHYLSE 12X50	TENSION PIN 12X50X2.5	
120	218128	2	HYLSE Ø13-Ø35X100	SPACER Ø13-Ø35X100	
121	813705	2	SEKSKANTSKRUE M12X150-8.8 ELZN	HEX. BOLT M12X150-8.8	
121	860163	4	BRIKKE Ø13-Ø24X2.5 ELZN	WASHER Ø13-Ø24X2.5	
121	852162	2	NYLOCKMUTTER M12 ELZN.	NYLOCK NUT M12 GALV	
122	215181	1	KJETTING Ø5-22X528	CHAIN	
123	813420	1	SEKSKANTSKRUE M8X20-8.8 ELZN	HEX. BOLT M8X20-8.8 GALV	
123	852158	1	NYLOCKMUTTER M8 ELZN.	NYLOCK NUT M8 GALV.	
123	860158	1	BRIKKE Ø8.4-17X1.6 ELZN	WASHER Ø8.4-Ø17X1.6	
125	911301	2	ENDEPLUGG 120X120X6(5)	PLUG	
126-130	**217907**	**1**	**GJØDSELSAMLER KOMPL.**	**COVER ASSY**	
126	217908	2	PROFILPLATE	PROFILE PLATE	
127	217909	1	PLATE MIDTRE	CENTER PLATE	
128	217910	1	PLATE ØVRE	UPPER PLATE	
129	821525	12	LÅSESKRUE M10X25-4.6 ELZN.	CARRIAGE BOLT M10X25-4.6 GALV.	
129	231500	12	BRIKKE Ø13.5-Ø25X5	WASHER Ø13.5-Ø25X5	
130	860160	12	BRIKKE Ø10.5-Ø21X2 ELZN	WASHER Ø10.5-Ø21X2	
130	852160	12	NYLOCKMUTTER M10 ELZN.	NYLOCK NUT M10 GALV.	

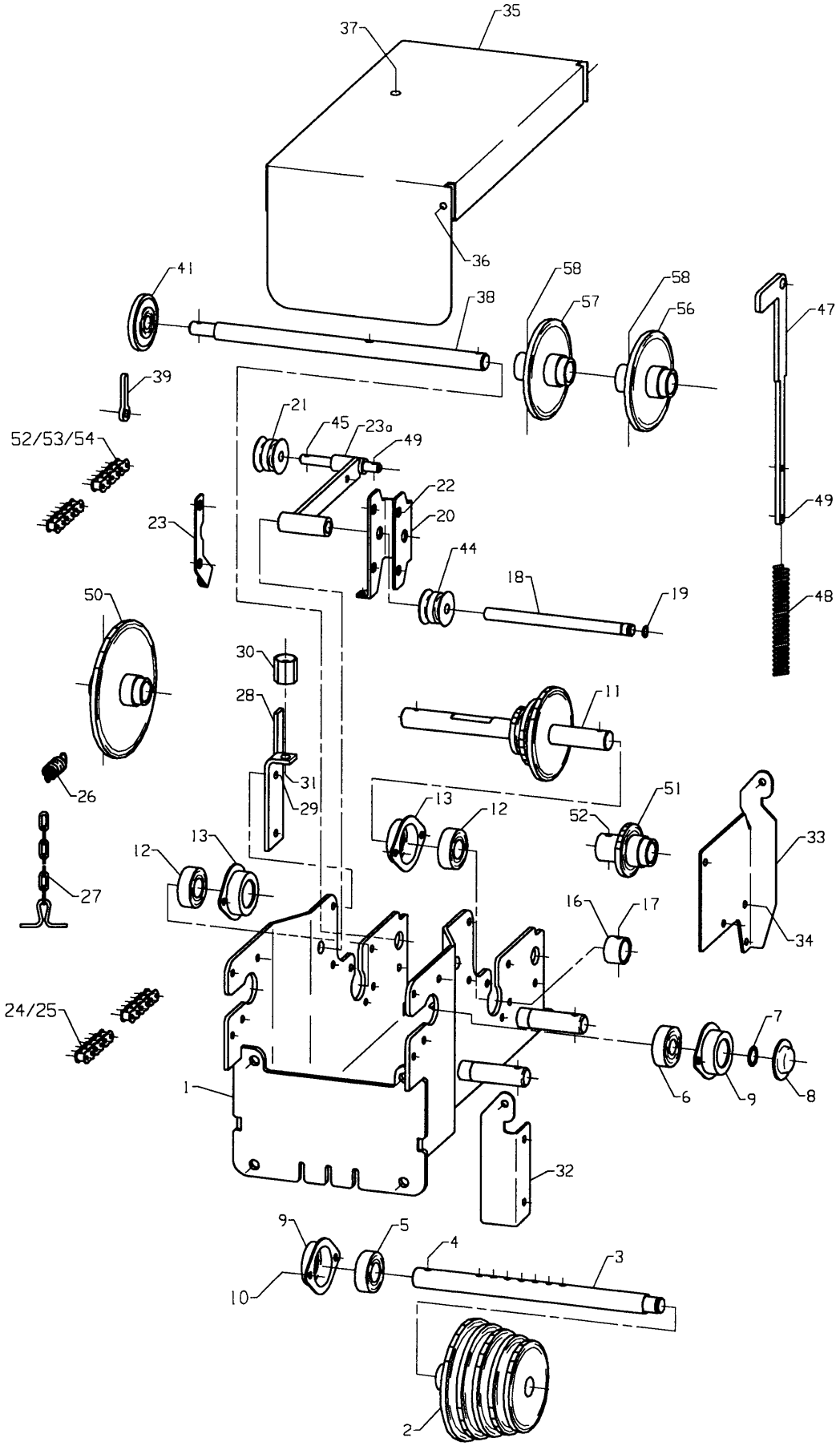
35
37
36
41
38
58
57
58
56
47
39
21
45
23a
49
52/53/54
22
20
23
44
18
19
49
48
50
30
28
11
31
29
26
13
12
51
52
33
13
12
27
16
17
34
24/25
7
1
6
9
8
32
9
5
4
3
10
2

Fig. 16

Utgave: Issue: 3	Redskap: Implement: POTETSETTER SLEPT 3200 / POTATO PLANTER TRAILED 3200	Kverneland
Dato: Date: 94-11	Enhet Unit: GEARKASSE FOR RADGJ. M/BELTEUTMATER / GEAR BOX FERT. ATT. W/BELT FEEDER	Fig nr.: 16

Ref. No.	Delenr. Part no.	Ant. Qty.	Gjenstand	Description	Anmerkning Note
*	218185		GEARKASSE GJ.UTMATER KPL.	GEAR BOX ASSY	
1	218186	1	GEARKASSE GJ.UTMATER SV.	GEAR BOX	
2	218190	1	KJEDEHJUL 5/8" 22-24-26-28-30T	SPROCKET 5/8" 22-24-26-28-30T	
3	218224	1	DRIVAKSEL UTG. Ø25X325	DRIVE SHAFT OUT.	
4	867081	1	RØRPINNE Ø8X36XØ34	PIN Ø8X36XØ34	
5	870727	1	KULELAGER 6205-2RS	BALL BEARING 6205-2RS	
6	870822	1	KULELAGER 6304-2RS	BALL BEARING 6304-2RS1	
7	868420	1	LÅSERING UTV. A20X1.2	CIRCLIP A20X1.2	
8	281633	1	DEKSEL Ø52	COVER	
9	215101	2	LAGERHUS Ø52-Ø37	BEARING HOUSING Ø52-Ø37	
10	813420	4	SEKSKANTSKRUE M8X20-8.8 ELZN	HEX. BOLT M8X20-8.8 GALV	
10	852158	4	NYLOCKMUTTER M8 ELZN.	NYLOCK NUT M8 GALV.	
10	850158	4	SEKSKANTMUTTER M8-8 ELZN.	HEX. NUT M8-8 GALV.	
11	218220	1	DRIVAKSEL SV. 5/8" 11-16-23T	DRIVE SHAFT 5/8" 11-16-23T	
12	870727	2	KULELAGER 6205-2RS	BALL BEARING 6205-2RS	
13	215101	2	LAGERHUS Ø52-Ø37	BEARING HOUSING Ø52-Ø37	
14	813420	3	SEKSKANTSKRUE M8X20-8.8 ELZN	HEX. BOLT M8X20-8.8 GALV	
14	852158	3	NYLOCKMUTTER M8 ELZN.	NYLOCK NUT M8 GALV.	
14	860158	6	BRIKKE Ø8.4-17X1.6 ELZN	WASHER Ø8.4-Ø17X1.6	
15	813425	1	SEKSKANTSKRUE M8X25-8.8 ELZN	HEX. BOLT M8X25-8.8 GALV.	
15	852158	1	NYLOCKMUTTER M8 ELZN.	NYLOCK NUT M8 GALV.	
15	860158	2	BRIKKE Ø8.4-17X1.6 ELZN	WASHER Ø8.4-Ø17X1.6	
16	218222	1	HYLSE Ø25.7-Ø33.7X20 Ø6.4	SPACER Ø25.7-Ø33.7X20 Ø6.4	
17	866336	1	SPENNHYLSE 6X36	TENSION PIN 6X36X1.25	
18	215258	1	STRAMMEAKSEL	TENSION SHAFT	
19	868712	2	SPORRYTTER 12	CIRCLIP "E"-TYPE 12	
20-22	215255	1	KJEDESTRAMMER V. KOMPL.	CHAIN TENSIONER ASSY	
20	215256	1	HJULHOLDER V.	ROLLER BRACKET	
21	222726	2	TRINSE	CHAIN ROLLER	
22	813650	2	SEKSKANTSKRUE M12X50-8.8 ELZN	HEX. BOLT M12X50-8.8 GALV.	
23	218216	1	KJEDESTRAMMERØRE	CHAIN TENSIONER BRACKET	
23a	218196	1	KJEDESTRAMMER SV.	CHAIN TENSIONER	
24	901630	1	RULLEKJEDE 5/8"X1064	CHAIN 5/8"X1064	
25	901602	1	RULLEKJEDELÅS 5/8"	CONNECTING LINK 5/8"	
26	215269	1	STREKKFJØR Ø3-Ø17X80	TENSION SPRING Ø3-Ø17X80	
27	215260	1	STRAMMEKJETTING	TENSION CHAIN	
28	218233	1	LÅSFESTE	BRACKET	
29	813425	2	SEKSKANTSKRUE M8X25-8.8 ELZN	HEX. BOLT M8X25-8.8 GALV.	
29	860158	4	BRIKKE Ø8.4-17X1.6 ELZN	WASHER Ø8.4-Ø17X1.6	
29	852158	2	NYLOCKMUTTER M8 ELZN.	NYLOCK NUT M8 GALV.	
30	256571	1	MUTTER	NUT	
31	813520	1	SEKSKANTSKRUE M10X20-8.8 ELZN	HEX. BOLT M10X20-8.8 GALV.	
32	218231	1	FRAMRE HENGSLE	FRONT HINGE	
33	218232	1	BAKRE HENGSLE	REAR HINGE	
34	813420	6	SEKSKANTSKRUE M8X20-8.8 ELZN	HEX. BOLT M8X20-8.8 GALV	
34	860158	6	BRIKKE Ø8.4-17X1.6 ELZN	WASHER Ø8.4-Ø17X1.6	
34	852158	6	NYLOCKMUTTER M8 ELZN.	NYLOCK NUT M8 GALV.	
35	218230	1	DEKSEL GJ.GEARKASSE	COVER	
36	813430	2	SEKSKANTSKRUE M8X30-8.8 ELZN	HEX. BOLT M8X30-8.8 GALV.	
36	860158	4	BRIKKE Ø8.4-17X1.6 ELZN	WASHER Ø8.4-Ø17X1.6	
36	850158	2	SEKSKANTMUTTER M8-8 ELZN.	HEX. NUT M8-8 GALV.	
37	855380	1	STJERNERATT M10	HANDWHEEL M10	
37	813540	1	SEKSKANTSKRUE M10X40-8.8 ELZN	HEX. BOLT M10X40-8.8 GALV.	
37	852160	1	NYLOCKMUTTER M10 ELZN.	NYLOCK NUT M10 GALV.	
38	218195	1	AKSEL Ø22	SHAFT Ø22	
39	243077	1	LÅSEPINNE	LOCKING PIN	
40	813425	1	SEKSKANTSKRUE M8X25-8.8 ELZN	HEX. BOLT M8X25-8.8 GALV.	
40	860158	1	BRIKKE Ø8.4-17X1.6 ELZN	WASHER Ø8.4-Ø17X1.6	
40	852158	1	NYLOCKMUTTER M8 ELZN.	NYLOCK NUT M8 GALV.	

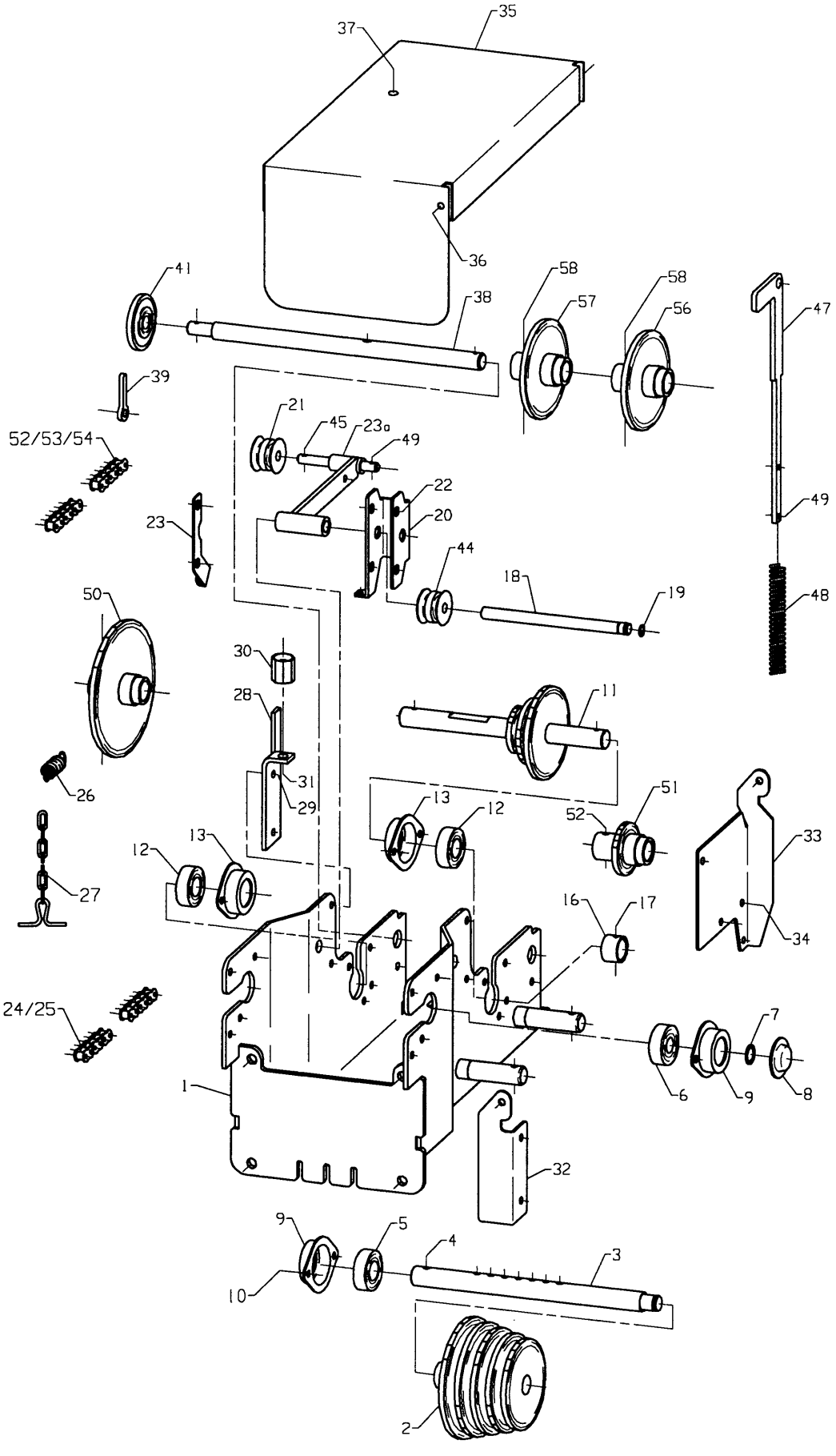
35
37
36
41
38
58
57
58
56
47
39
21
45
23a
49
52/53/54
22
20
23
49
44
18
19
48
50
30
28
11
31
29
26
13
12
51
52
33
13
12
27
16
17
34
24/25
7
1
6
9
8
32
9
5
4
3
10
2

Fig. 16

Utgave: / Issue:	3	Redskap: / Implement:	POTETSETTER SLEPT 3200 POTATO PLANTER TRAILED 3200	Kverneland
Dato: / Date:	94-11	Enhet / Unit	GEARKASSE FOR RADGJ. M/BELTEUTMATER GEAR BOX FERT. ATT. W/BELT FEEDER	Fig nr.: 16

Ref. No.	Delenr. Part no.	Ant. Qty.	Gjenstand	Description	Anmerkning Note
41	221519	1	KJEDEHJUL 5/8" 13T.M/LAGER	SPROCKET 13T.ASSY.	
42	860166	3	BRIKKE Ø17-Ø30X3 ELZN	WASHER Ø17-Ø30X3	
43	865325	1	SPLINT 6.3X25 GALV.	SPLIT PIN 6,3 X 25	
44	222726	1	TRINSE	CHAIN ROLLER	
45	860163	1	BRIKKE Ø13-Ø24X2.5 ELZN	WASHER Ø13-Ø24X2.5	
46	865325	1	SPLINT 6.3X25 GALV.	SPLIT PIN 6,3 X 25	
47	218215	1	FJØRSTYRINGSARM	GUIDING ARM	
48	223898	1	TRYKKFJØR Ø3-Ø18X186	SPRING	
49	867056	2	RINGPINNE Ø6 ELZN	RING PIN 6 GALV	
50	218206	1	KJEDEHJUL 5/8" 34T-Ø25 SV.	SPROCKET 5/8" 34T-Ø25	
51	218203	1	KJEDEHJUL 5/8" 12T-Ø25 SV.	SPROCKET 5/8" 12T-Ø25	
52	867081	2	RØRPINNE Ø8X36XØ34	PIN Ø8X36XØ34	
53	901635	1	RULLEKJEDE 5/8"X1286	CHAIN 5/8"X1286	
54	901602	1	RULLEKJEDELÅS 5/8"	CONNECTING LINK 5/8"	
55	901604	1	RULLEKJEDEHALVLEDD 5/8"X3/8"	HALF LINK 5/8"X3/8"	
56	218204	1	KJEDEHJUL 5/8" 22T-Ø25 SV.	SPROCKET 5/8" 22T-Ø25	
57	218205	1	KJEDEHJUL 5/8" 24T-Ø25 SV.	SPROCKET 5/5" 24T-Ø25	
58	867081	2	RØRPINNE Ø8X36XØ34	PIN Ø8X36XØ34	

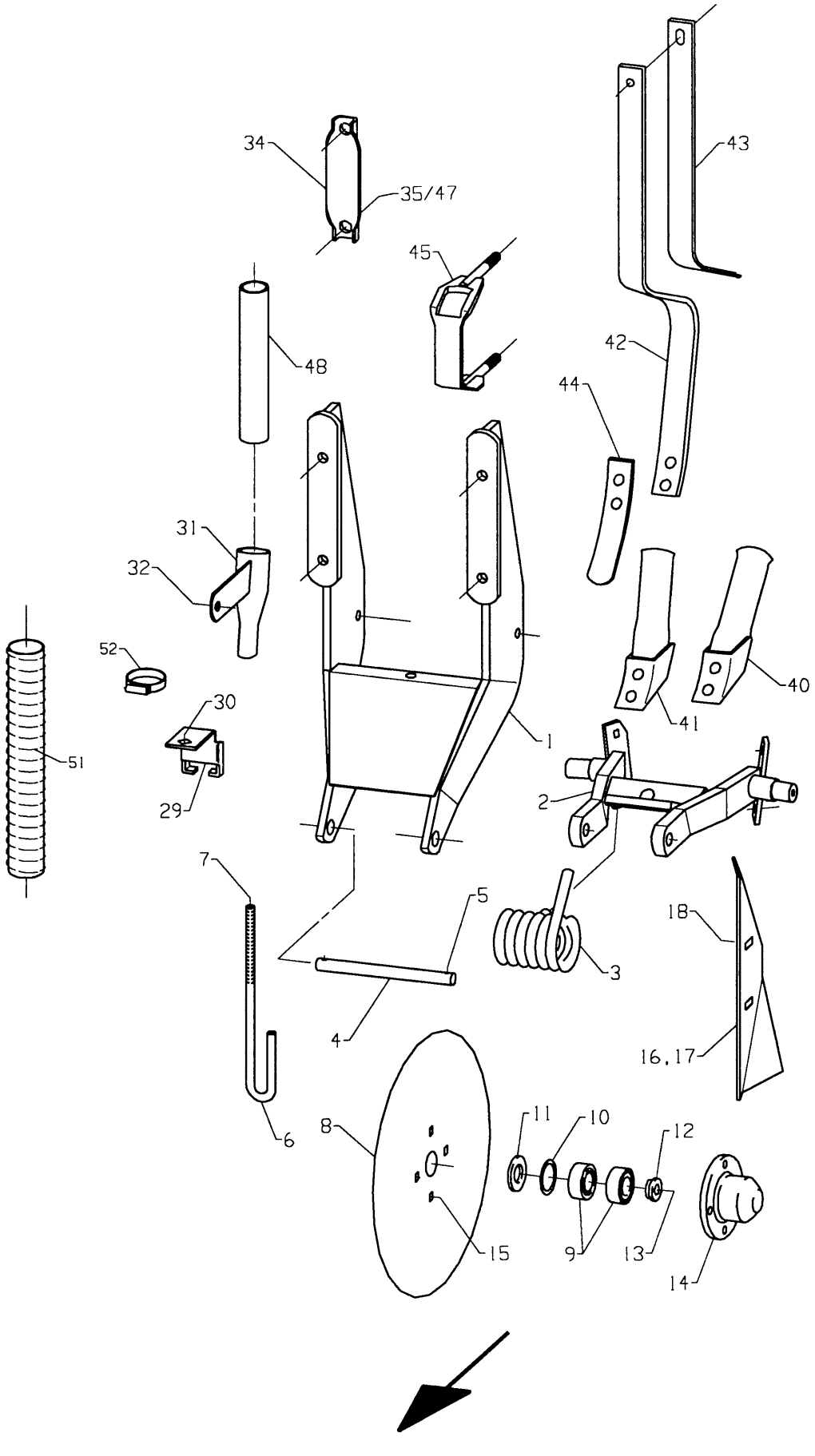
34
35/47
45
43
48
42
44
31
32
52
30
29
51
1
40
41
2
7
5
3
18
4
16,17
6
8
11
10
12
15
9
13
14

Fig. 17

Utgave: / Issue: 3	Redskap: / Implement: POTETSETTER SLEPT 3200 / POTATO PLANTER TRAILED 3200	Kverneland
Dato: / Date: 94-11	Enhet / Unit: GJØDSELRULLESKJÆR, GJØDSELTINDER / FERTILIZER DISC COULTER	Fig nr.: 17

Ref. No.	Delenr. Part no.	Ant. Qty.	Gjenstand	Description	Anmerkning Note
			NB! ANTALL PER RAD	**OBSERVE! QTY. PER ROW**	
			GJØDSELRULLESKJÆR	**FERTILIZER DISC COULTERS**	
1	216568	1	RAMME	FRAME	
2	223577	1	RULLESKJÆRHOLDER	DISC HOLDER	
3	224052	2	FJØR	SPRING	
4	224053	1	BOLT Ø16X180-Ø6.4/164/Ø6.4	PIN Ø16X180-Ø6.4/164/Ø6.4	
5	865332	2	SPLINT 6.3X32 GALV.	SPLIT PIN 6,3 X 32	
6	224054	1	KROK	DEPTH ADJUSTER	
7	860163	1	BRIKKE Ø13-Ø24X2.5	WASHER Ø13-Ø24X2.5	
7	850162	1	SEKSKANTMUTTER M12-8 GALV	HEX. NUT M12-8 GALV.	
8	223583	2	RULLESKJÆRPLATE	DISC PLATE	
9	870905	4	RULLELAGER KON IKOS 025	BEARING KON IKOS 025	
10	868842	2	PASS-SKIVE Ø37-Ø47X0.5	RING	
11	871875	2	STÅLSKIVETETNING 25X47/4	STEEL LAB. SEAL	
12	223581	2	STOPPRING	STOPRING	
13	825216	2	SYL.SKRUE M/6KT.HOL M8X16	CYLINDER SCREW M8 X 16	
14	223582	2	LAGERHUS	BEARING HOUSE	
15	823522	8	PLOGSKRUE M10X22-8.8 GALV.	PLOUGH BOLT M10X22-8.8 GALV.	
15	860160	8	BRIKKE Ø10.5-Ø21X2	WASHER Ø10.5-Ø21X2	
15	850160	8	SEKSKANTMUTTER M10-8 GALV.	HEX.NUT M10-8 GALV.	
16	223570	1	AVSKRAPER VENSTRE	SCRAPER	
17	223569	1	AVSKRAPER HØYRE	SCRAPER	
18	821420	4	LÅSESKRUE M8X20-4.6 GALV	CARR.BOLT M8X20-4.6 GALV.	
18	860158	4	BRIKKE Ø8.4-Ø17X1.6	WASHER Ø8.4-Ø17X1.6	
18	850158	4	SEKSKANTMUTTER M8-8 GALV	HEX.NUT M8-8 GALV.	
29	215890	2	FESTEVINKEL	BRACKET	
30	821690	2	LÅSESKRUE M12X90-4.6 GALV.	CARRIAGE BOLT M12X90-4.6 GALV	
30	860163	2	BRIKKE Ø13-Ø24X2.5	WASHER Ø13-Ø24X2.5	
31	216572	2	SÅSLANGEHOLDER	TUBE HOLDER	
32	813630	2	SEKSKANTSKRUE M12X30-8.8 GALV.	HEX. BOLT M12X30-8.8 GALV.	
32	860163	4	BRIKKE Ø13-Ø24X2.5	WASHER Ø13-Ø24X2.5	
34	215005	2	KLAMMER	CLAMP	
35	813905	4	SEKSKANTSKRUE M16X150-8.8 GALV	HEX.BOLT M16X150-8.8 GALV	
35	860166	4	BRIKKE Ø17-Ø30X3	WASHER Ø17-Ø30X3	
40-44	**216508**	**2**	**GJØDSELTINDE FREMRE REKKE**	**FERTILIZER TINE FORW. ROW**	
40	216612	2	SÅRØR FREMRE REKKE	FEED TUBE FRONT ROW	
41-44	**216509**	**2**	**GJØDSELTINDE BAKRE REKKE**	**FERTILIZER TINE REAR ROW**	
41	216613	2	SÅRØR BAKRE REKKE	FEED TUBE REAR	
42	216610	4	TINDE 32X12	TINE 32X12	
43	216611	4	HJELPEFJØR 32X12	SPRING 32X12	
44	215853	4	SPISS 32MM	WEARING POINT 32MM	
45	216580	4	KLAMMER	CLAMP	
46	215005	4	KLAMMER	CLAMP	
47	860163	8	BRIKKE Ø13-Ø24X2.5	WASHER Ø13-Ø24X2.5	
47	852162	8	NYLOCKMUTTER M12 GALV	NYLOCK NUT M12 GALV	
51	215914	4	SÅSLANGE Ø45 SPIRALFLEX	FEED TUBE	
52	403534	4	SLANGEKLEMME Ø50	PLASTIC HOSE CLIPS	

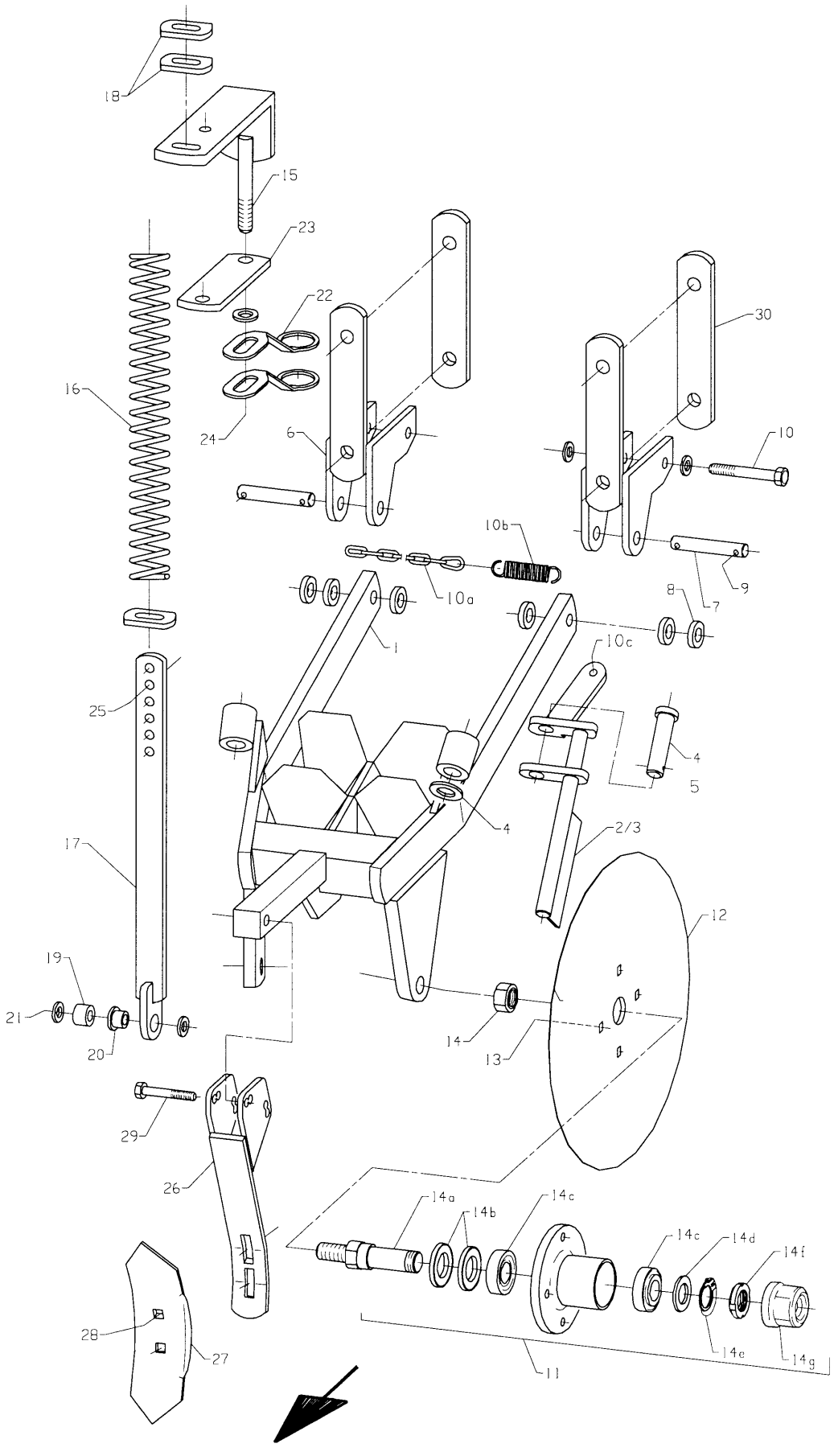
18
15
23
22
24
16
6
30
10
10b
10a
9
7
8
1
10c
25
4
5
4
2/3
17
12
19
21
20
14
13
29
26
14a
14b
14c
14c
14d
14f
14e
14g
11
28
27

Fig. 18

Utgave: Issue: 3	Redskap: Implement: POTETSETTER SLEPT 3200 / POTATO PLANTER TRAILED 3200	Kverneland
Dato: Date: 94-11	Enhet Unit: GJØDSELRULLESKJÆR TYPE HD 3244-3247-3248 / FERTILIZER DISC COULTER TYPE HD 3244-3247-3248	Fig nr.: 18

Ref. No.	Delenr. Part no.	Ant. Qty.	Gjenstand	Description	Anmerkning Note
1a	217933	1	RULLESKJÆRRAMME SV.	DISC HOLDER	3244
1b	217903	1	RULLESKJÆRRAMME SV.	DISC HOLDER	3247/3248
2	218090	1	AVSKRAPER V.	SCRAPER LH	
3	218091	1	AVSKRAPER H.	SCRAPER RH	
4	218097	2	BOLT M/HODE Ø22X65	BOLT W/HEAD Ø22X65	
5	867014	2	FJØRPINNE Ø4.0X75 ELZN	SPRING PIN Ø4.0X75 GALV	
6	217957	2	BOMFESTE SV.	BAR BRACKET	
7	288203	2	BOLT Ø16-Ø6.4/62/Ø6.4	SPLIT PIN BOLT	
8	281415	6	BRIKKE Ø17-Ø32X6	WASHER Ø17-Ø32X6	
9	865332	4	SPLINT 6.3X32 GALV.	SPLIT PIN 6,3 X 32	
10	813680	2	SEKSKANTSKRUE M12X80-8.8 ELZN	HEX. BOLT M12X80-8.8 GALV	
10	860163	4	BRIKKE Ø13-Ø24X2.5 ELZN	WASHER Ø13-Ø24X2.5	
10	852162	2	NYLOCKMUTTER M12 ELZN.	NYLOCK NUT M12 GALV	
10a	218098	4	KJETTING Ø4-Ø19X285	CHAIN Ø4-Ø19X285	
10b	300666	4	STREKKFJØR Ø2.2-Ø17.8X76	TENSION SPRING Ø2.2-Ø17.8X76	
10c	813440	8	SEKSKANTSKRUE M8X40-8.8 ELZN	HEX. BOLT M8X40-8.8 GALV.	
10c	850158	16	SEKSKANTMUTTER M8-8 ELZN.	HEX. NUT M8-8 GALV.	
11-14	**217925**	**8**	**RULLESKJÆR 380 M/NAV**	**DISC PLATE 380 W/HUB**	
11	217927	1	RULLESKJÆRNAV M/AKSEL	DISC PLATE HUB W/AXLE	
12	217926	1	RULLESKJÆR Ø380	DISC PLATE	
13	823525	4	PLOGSKRUE M10X25 8.8 ELZN.	PLOUGH BOLT M10X25 8.8 GALV.	
13	850160	4	SEKSKANTMUTTER M10-8 ELZN.	HEX. NUT M10-8 GALV.	
14	850170	1	SEKSKANTMUTTER M20-8 ELZN.	HEX. NUT M20 GALV	
14a	217928	1	AKSEL Ø25-M20 RULLESKJ.NAV	AXLE WITH DISC PLATE HUB	
14b	871827	2	TETNINGSLAMELL 30X52/5.5	SEALING DISK	
14c	412512	2	RULLELAGER KON. 30205	ROLLER BEARING 30205	
14d	217929	1	KLEMBRIKKE Ø25-Ø42X3	WASHER	
14e	869880	1	LÅSEBRIKKE	WASHER	
14f	869855	1	AKSELMUTTER M25X1.5	NUT	
14g	217930	1	NAVKOPP M/SMØRENIPPEL	HUB CAP W/GREASE NIPPLE	
15-25	**217944**	**4**	**FJØROPPHENG KPL.**	**SPRING SUSPENSION ASSY**	
15	218112	1	FJØROPPHENGFESTE SV.	SPRING SUSPENSION BRACKET	
16	223171	1	TRYKKFJØR Ø6-Ø41X380	TENSION SPRING Ø6-Ø41X380	
17	217946	1	FJØRSTYRING SV.	FJØRSTYRING SV.	
18	217949	3	BRIKKE 13.5X34-Ø60	WASHER	
19	410443	1	HYLSE Ø13-Ø25X15	SPACER Ø13-Ø25X15	
20	215198	1	LAGERFORING Ø12.7X15-Ø20/11.5	BEARING LINING Ø12.7X15	
21	813680	1	SEKSKANTSKRUE M12X80-8.8 ELZN	HEX. BOLT M12X80-8.8 GALV	
21	860163	1	BRIKKE Ø13-Ø24X2.5 ELZN	WASHER Ø13-Ø24X2.5	
21	852162	1	NYLOCKMUTTER M12 ELZN.	NYLOCK NUT M12 GALV	
22	217922	2	SLANGEHOLDER	HOSE HOLDER	
23	215005	1	KLAMMER	CLAMP	
24	813906	2	SEKSKANTSKRUE M16X160-8.8 ELZN	HEX. BOLT M16X160-8.8 GALV.	
24	860166	2	BRIKKE Ø17-Ø30X3 ELZN	WASHER Ø17-Ø30X3	
24	850166	2	SEKSKANTMUTTER M16-8 ELZN.	HEX. NUT M16 GALV	
25	813560	1	SEKSKANTSKRUE M10X60-8.8 ELZN	HEX. BOLT M10X60-8.8 GALV.	
25	852160	1	NYLOCKMUTTER M10 ELZN.	NYLOCK NUT M10 GALV.	
26-29	**217915**	**4**	**NASETINDE GJ.RULLESKJÆR KPL.**	**FERTILIZER DISC PLATE**	
26	217916	1	NASETINDEHOLDER SV.	TINE HOLDER	
27	288821	1	SPISS 63	POINT 63MM	
28	823530	2	PLOGSKRUE M10X30-8.8 ELZN.	PLOUGH BOLT M10X30-8.8 GALV.	
28	860160	2	BRIKKE Ø10.5-Ø21X2 ELZN	WASHER Ø10.5-Ø21X2	
28	850160	2	SEKSKANTMUTTER M10-8 ELZN.	HEX. NUT M10-8 GALV.	
29	813560	2	SEKSKANTSKRUE M10X60-8.8 ELZN	HEX. BOLT M10X60-8.8 GALV.	
29	860160	2	BRIKKE Ø10.5-Ø21X2 ELZN	WASHER Ø10.5-Ø21X2	
29	852160	2	NYLOCKMUTTER M10 ELZN.	NYLOCK NUT M10 GALV.	
30	217941	2	LASK 40X12-Ø17/137/Ø17	CLAMP	

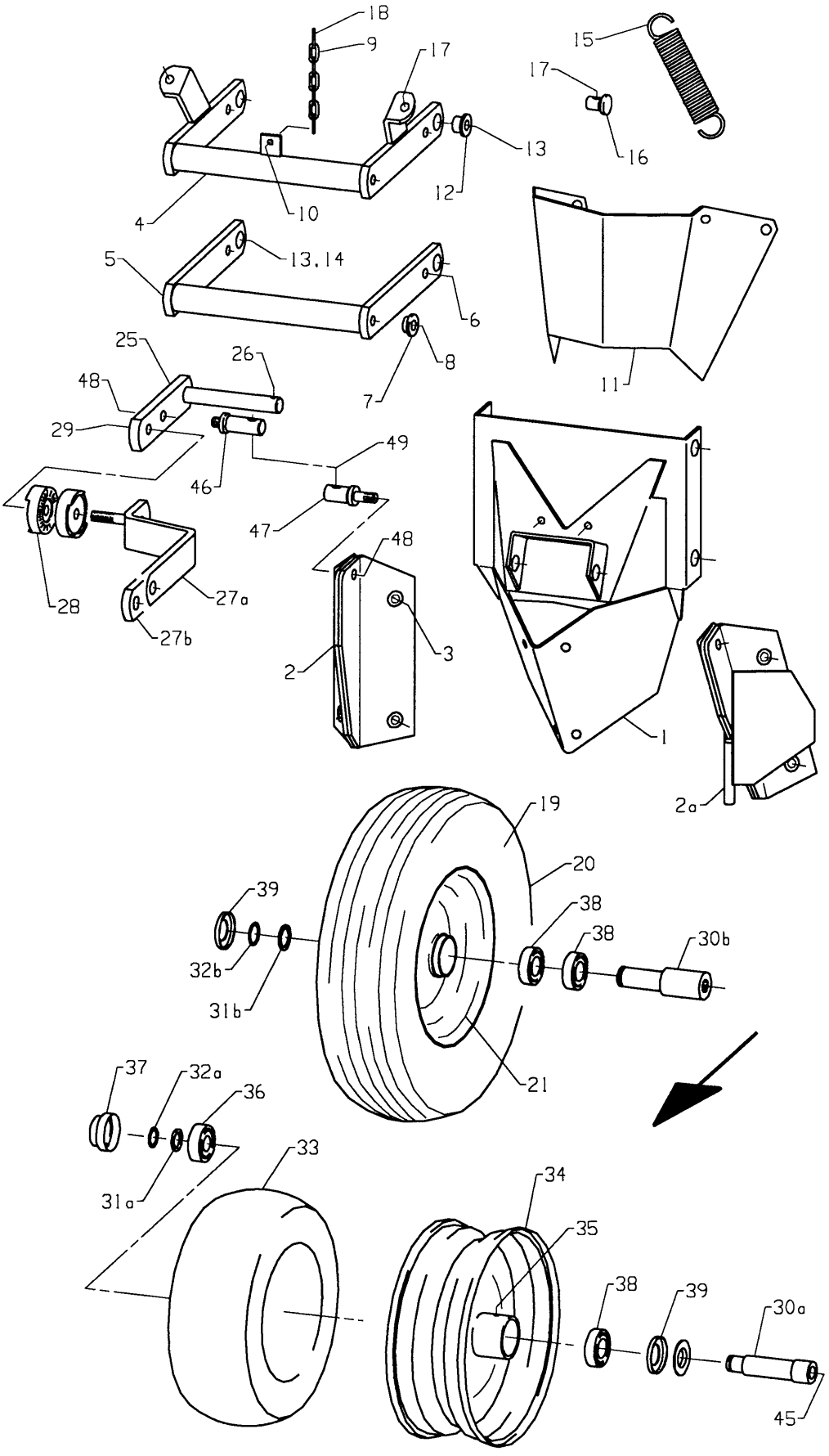
18
9
17
15
17
16
13
12
4
10
5
13,14
6
8
7
11
25
26
48
29
49
46
47
48
28
27a
27b
3
2
1
2a
19
20
39
38
38
30b
32b
31b
21
37
32a
36
33
31a
34
35
38
39
30a
45

Fig. 19

Utgave: / Issue: 3	Redskap: / Implement: POTETSETTER SLEPT 3200 / POTATO PLANTER TRAILED 3200	Kverneland
Dato: / Date: 94-11	Enhet / Unit SETTESKJÆR FLYT. STD. / FLOATING FURROW OPENER STD.	Fig nr.: 19

Ref. No.	Delenr. Part no.	Ant. Qty.	Gjenstand	Description	Anmerkning Note
1-18	**215320**		**FLYTENDE SKJÆR U/HJUL SAMLENR.**	**FLOATING F/OPENERS 3000 2 ROW**	
1	215325	1	FLYTENDE SKJÆR SV.	FLOATING SHARE	
2	215314	1	SLITESPISS SV.	WEARING POINT	
2a	215319	2	VERTIKAL SLITESPISS SV.	VERTICAL WEARING POINT	OPTION
3	839525	4	SENKSKRUE M/SPOR M10X25 ELZN.	COUNTERSUNK BOLT M10X25 GALV	
3	852160	4	NYLOCKMUTTER M10 ELZN.	NYLOCK NUT M10 GALV.	
4	215331	1	ØVRE PARALELLFØRING SV.	UPPER STAY	
5	215332	1	UNDRE PARALELLFØRING SV.	LOWER STAY	
6	813630	1	SEKSKANTSKRUE M12X30-8.8 ELZN	HEX. BOLT M12X30-8.8 GALV.	
6	850162	1	SEKSKANTMUTTER M12-8 ELZN.	HEX. NUT M12-8 GALV.	
7	215199	4	LAGERFORING Ø12.7X9-Ø20/6	BEARING LINING Ø12.7XØ20/6	
8	813625	4	SEKSKANTSKRUE M12X25-8.8 ELZN	HEX. BOLT M12X25-8.8 GALV	
9	411722	1	KJETTING Ø4-19X513	CHAIN Ø3.5-18X400	
10	837270	1	PANSKRUE M/KRYSSPOR M5X20 ELZN	RCD PAN HEAD BOLT M5X20	
10	850155	1	SEKSKANTMUTTER M5-8 ELZN.	HEX. NUT M5 GALV	
11	215307	1	LEDEPLATE	GUIDING PLATE	
12	215198	4	LAGERFORING Ø12.7X15-Ø20/11.5	BEARING LINING Ø12.7X15	
13	813640	4	SEKSKANTSKRUE M12X40-8.8 ELZN	HEX. BOLT M12X40-8.8 GALV	
14	231500	2	BRIKKE Ø13.5-Ø25X5	WASHER Ø13.5-Ø25X5	
15	300336	1	STREKKFJØR Ø4-Ø31X165	TENSION SPRING Ø4-Ø31X165	
16	215338	1	MUTTER	NUT	
17	810602	1	6KT.SKR.HELGJ.M10X120-8.8 ELZN	HEX. BOLT M10X120-8.8 GALV	
18	867013	1	FJØRPINNE Ø2.5X41 ELZN	SPRING PIN Ø2.5X41 GALV	
19-21	**240140**		**HJUL 4.00-8, 4 LAG**	**WHEEL 4.00X8 ASSY.**	**94-**
19	240151	1	SLANGE 4.00 X 8	TUBE 4,00 X 8	
20	240150	1	DEKK 4.00-8-4 LAG	TYRE 4.00X8-4 PLY	
21	240141	1	FELG MED LAGER	RIM WITH BEARING	
25a-39	**215322**		**DYBDEHJUL FOR FLYT. SKJÆR**	**DEPTH WHEEL FOR FLOATING SHARE**	**-94**
25b-39	**215323**		**DYBDEHJUL 8"F/FLYT. SKJÆR**	**DEPTH WHEEL FOR FLOATING SHARE**	**94-**
25	215341	1	ARM M/AKSEL SV.	ARM W/SHAFT	
26	865332	1	SPLINT 6.3X32 GALV.	SPLIT PIN 6,3 X 32	
27a	215345	1	HJULARM SV.	WHEEL ARM	
27b	215353	1	HJULARM LANG SV.	LONG WHEEL ARM	
28	215349	2	STJERNEBRIKKE	STAR WASHER	
29	852162	1	NYLOCKMUTTER M12 ELZN.	NYLOCK NUT M12 GALV	
30a-39	**206267**	**1**	**HJUL MED AKSEL**	**WHEEL AND SHAFT**	**-94**
30b-39	**205130**	**1**	**HJUL M/AKSEL**	**SUPPORT WHEEL ASSY**	**94-**
30a	206269	1	HJULAKSEL	WHEEL SHAFT	
30b	205132	1	HJULAKSEL	WHEEL SHAFT	
31a	868604	1	STØTTERING 20X28X2	SUPPORT RING 20X28X2.0	
31b	868605	1	STØTTERING 25X35X2	SUPPORT RING 25X35X2.0	
32a	868420	1	LÅSERING UTV. A20X1.2	CIRCLIP A20X1.2	
32b	868425	1	LÅSERING UTV. A25X1.20	CIRCLIP A25X1.20	
33-39	**206270**	**1**	**HJUL KOMPLETT**	**WHEEL ASSY.**	**-94**
33	206275	1	GUMMIHJULBANE	TYRE	
34	206272	1	FELG MED SKRUER	RIM W. SCREWS	
35	873540	1	SMØRENIPPEL M6 RETT	GREASE NIPPLE M6	
36	870720	1	KULELAGER 6204	BALL BEARING 6204	
37	206273	1	HJULKAPSEL	WHEEL HUB	
38	870625	3	KULELAGER 6005	BALL BEARING 6005	
39	871822	4	TETNINGSLAMELL 25X47/5	LAMELLA SKF-Z005	
45	813830	1	SEKSKANTSKRUE M16X30-8.8 ELZN	HEX. BOLT M16X30-8.80 GALV.	
46	215352	1	STILLHYLSE	ADJUSTING COLLAR	
47	215351	1	STILLMUTTER	ADJUSTING NUT	
48	852162	2	NYLOCKMUTTER M12 ELZN.	NYLOCK NUT M12 GALV	
49	810703	1	6KT.SKR.HELGJ.M12X130-8.8 ELZN	HEX. BOLT M12X130-8.8 GALV	
49	850162	3	SEKSKANTMUTTER M12-8 ELZN.	HEX. NUT M12-8 GALV.	

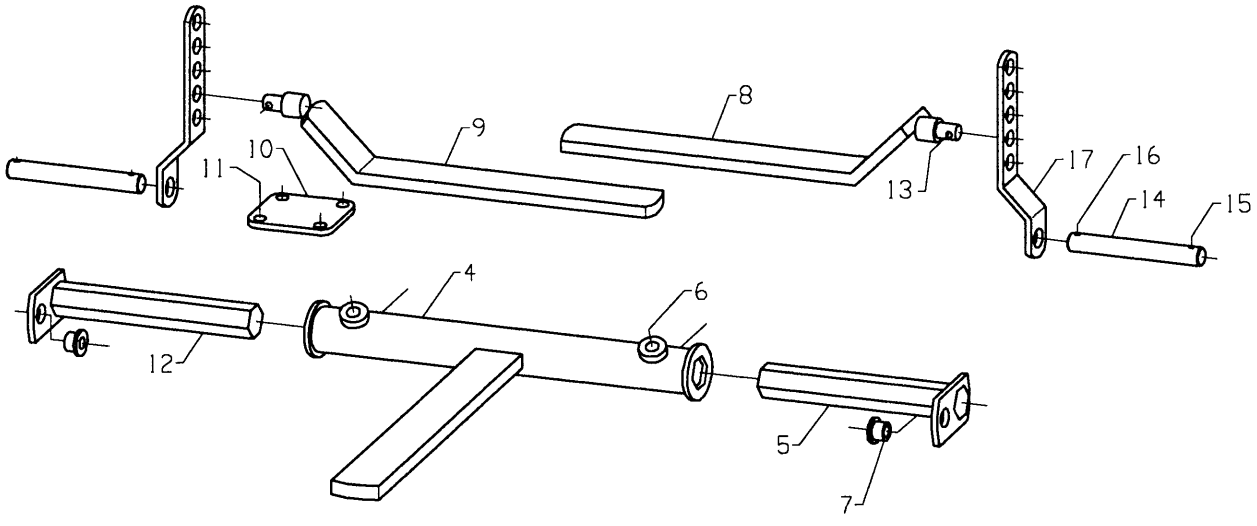

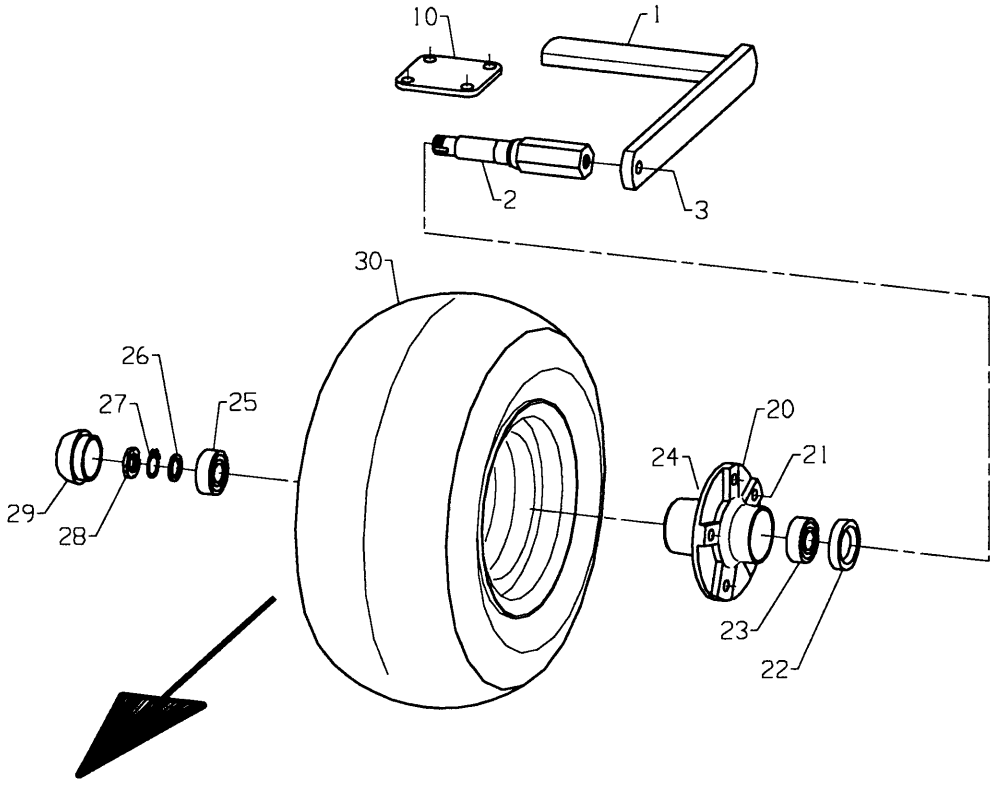

Fig. 20

Utgave: / Issue: 3	Redskap: / Implement: POTETSETTER SLEPT 3200 / POTATO PLANTER TRAILED 3200	Kverneland
Dato: / Date: 94-11	Enhet / Unit: DYBDEHJUL / DEPTH WHEEL	Fig nr.: 20

Ref. No.	Delenr. Part no.	Ant. Qty.	Gjenstand	Description	Anmerkning Note
1	215775	1	HJULARM SV.	WHEEL ARM	
2	215778	1	HJULAKSEL 6KT32	WHEEL SHAFT	
3	813635	1	SEKSKANTSKRUE M12X35-8.8 ELZN	HEX. BOLT M12X35-8.8 GALV	
4	215783	1	HJULRAMME SV.	WHEEL FRAME	
5	215790	2	HENGSLEARM SV.	ARM	
6	813840	4	SEKSKANTSKRUE M16X40-8.8 ELZN	HEX. BOLT M16X40-8.8 GALV.	
7	215198	2	LAGERFORING Ø12.7X15-Ø20/11.5	BEARING LINING Ø12.7X15	
8	215795	1	SKJÆRSTYRINGSARM V. SV.	SHARE CONTROLLING ARM LEFT	
9	215796	1	SKJÆRSTYRINGSARM H. SV.	SHARE CONTROLLING ARM RIGHT	
10	412088	2	KLEMPLATE Ø13-51-51	CLAMP	
11	813680	4	SEKSKANTSKRUE M12X80-8.8 ELZN	HEX. BOLT M12X80-8.8 GALV	
11	852162	4	NYLOCKMUTTER M12 ELZN.	NYLOCK NUT M12 GALV	
12	215790	2	HENGSLEARM SV.	ARM	
13	867056	2	RINGPINNE Ø6 ELZN	RING PIN 6 GALV	
14	215772	2	BOLT Ø20-Ø6.4/126/Ø6.4	BOLT Ø20-Ø6.4/126/Ø6.4	
15	867056	2	RINGPINNE Ø6 ELZN	RING PIN 6 GALV	
16	865325	2	SPLINT 6.3X25 GALV.	SPLIT PIN 6,3 X 25	
17	215770	2	STILLSTAG M/HOL	ADJUSTING BAR W/HOLE	
20-30	**228660**	**1**	**NAV KOMPL.**	**HUB ASSY**	
20	228661	1	NAVHUS	BOSS	
21	231405	5	FELGSKRUE M12	SCREW M12	
22	871307	1	TETNINGSRING 305210	OIL SEAL 305210	
23	870725	1	KULELAGER 6205	BALL BEARING 6205	
24	873540	1	SMØRENIPPEL M6 RETT	GREASE NIPPLE M6	
25	870720	1	KULELAGER 6204	BALL BEARING 6204	
26	868604	1	STØTTERING 20X28X2	SUPPORT RING 20X28X2.0	
27	869879	1	LÅSEBRIKKE Ø20	LOCK WASHER Ø20	
28	869854	1	AKSELMUTTER M20X1	NUT M20X1	
29	228662	1	HJULKOPP Ø47	CAP	
30	412501	1	HJUL 190-8"LP, 8PR	WHEEL 190-8"LP, 8PR	

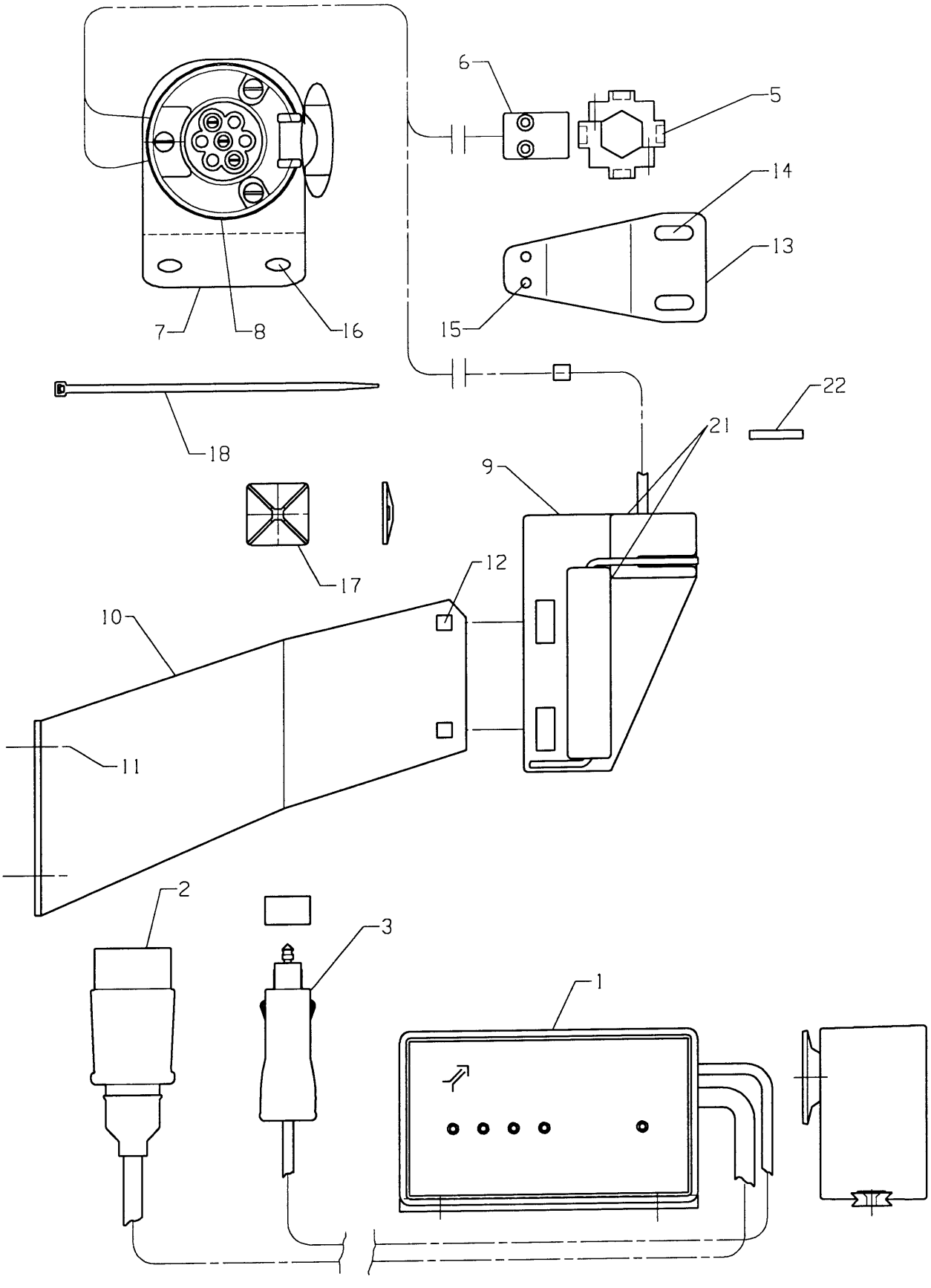

Fig. 21

Utgave: Issue: 3	Redskap: Implement: POTETSETTER SLEPT 3200 / POTATO PLANTER TRAILED 3200	Kverneland
Dato: Date: 94-11	Enhet Unit: ELEKTRONISK SETTEKONTROLL / ELECTRONIC PLANTING CONTROL	Fig nr.: 21

Ref. No.	Delenr. Part no.	Ant. Qty. 2R	Ant. Qty. 4R	Gjenstand	Description	Anmerkning Note
1+2+3	216051	1	1	SETTEKONTROLLPANEL	PLANTING CONTROL PANEL	
2	216066	1	1	STØPSEL,7-POLET	PLUG	
3	302234	1	1	STØPSEL	PLUG	
5-18	**216082**	**1**		**SETTESENSORER 2-R KOMPL.**	**PLANTING SENSORS 2-R ASSY**	
5-18	**216084**		**1**	**SETTESENSORER 4-R KOMPL.**	**PLANTING SENSORS 4-R ASSY**	
5-9	**216053**	**1**		**SETTESENSORER 2-R**	**PLANTING SENSORS 2-R**	
5-9	**216055**		**1**	**SETTESENSORER 4-R**	**PLANTING SENSORS 4-R**	
5	216058	1	1	REFERANSEGIVER M/4 MAGNETER	PLASTIC DIE W/4 MAGNETOES	
6	216062	1	1	REFERANSESENSOR M/KABEL	REFERENCE SENSOR W/CABLE	
7	216064	1	1	KONTAKTFESTE	BRACKET	
8	216067	1	1	STIKKONTAKT,7-POLET	PLUG SOCKET	
9	216088	2	4	POTETSENSOR M95 M/KABEL 3.6M	POTATO SENSOR W/CABLE 3.6M	
10	216076	2	4	POTETSENSORHOLDER	POTATO SENSOR HOLDER	
11	821420	4	8	LÅSESKRUE M8X20-4.6 GALV	CARRIAGE BOLT M8X20-4.6 GALV.	
11	860158	4	8	BRIKKE Ø8.4-Ø17X1.6	WASHER Ø8.4-Ø17X1.6	
11	852158	4	8	NYLOCKMUTTER M8 GALV	NYLOCK NUT M8 GALV.	
12	821316	4	8	LÅSESKRUE M6X16-4.6 GALV.	CARRIAGE BOLT M6X16-4.6 GALV.	
12	860155	4	8	BRIKKE Ø6.6-Ø18X1.5	WASHER Ø6.6-Ø18X1.5	
12	852156	4	8	NYLOCKMUTTER M6 GALV	NYLOCK NUT M6 GALV.	
13	216063	1	1	REFERANSESENSORHOLDER	PLASTIC DIE SENSORHOLDER	
14	813320	2	2	SEKSKANTSKRUE M6X20-8.8 GALV.	HEX. BOLT M6X20-8.8 GALV	
14	852156	2	2	NYLOCKMUTTER M6 GALV	NYLOCK NUT M6 GALV.	
14	860155	2	2	BRIKKE Ø6.6-Ø18X1.5	WASHER Ø6.6-Ø18X1.5	
15	837220	2	2	SYL.SKRUE M/SPOR M4X20 GALV	PAN SCREW M4X20	
15	852156	2	2	NYLOCKMUTTER M6 GALV	NYLOCK NUT M6 GALV.	
15	860155	2	2	BRIKKE Ø6.6-Ø18X1.5	WASHER Ø6.6-Ø18X1.5	
16	837220	2	2	SYL.SKRUE M/SPOR M4X20 GALV	PAN SCREW M4X20	
16	850154	2	2	SEKSKANTMUTTER M4-8 GALV	HEX. NUT M4 GALV.	
16	860150	2	2	BRIKKE Ø4.3-Ø9X0.8	WASHER Ø4.3-Ø9X0.8	
17	216072	7	13	KABELBÅNDFESTE SJØLKLEBENDE	FIXING TAPE BRACKET	
18	216071	13	24	BUNTEBAND 3.5X150	HOSE STIP 3.5X150	
21	216088	1	1	POTETSENSOR M95 M/KABEL 3.6M	POTATO SENSOR W/CABLE 3.6M	
22	216077	1	1	GUMMIDEMPER	RUBBER DAMPER	

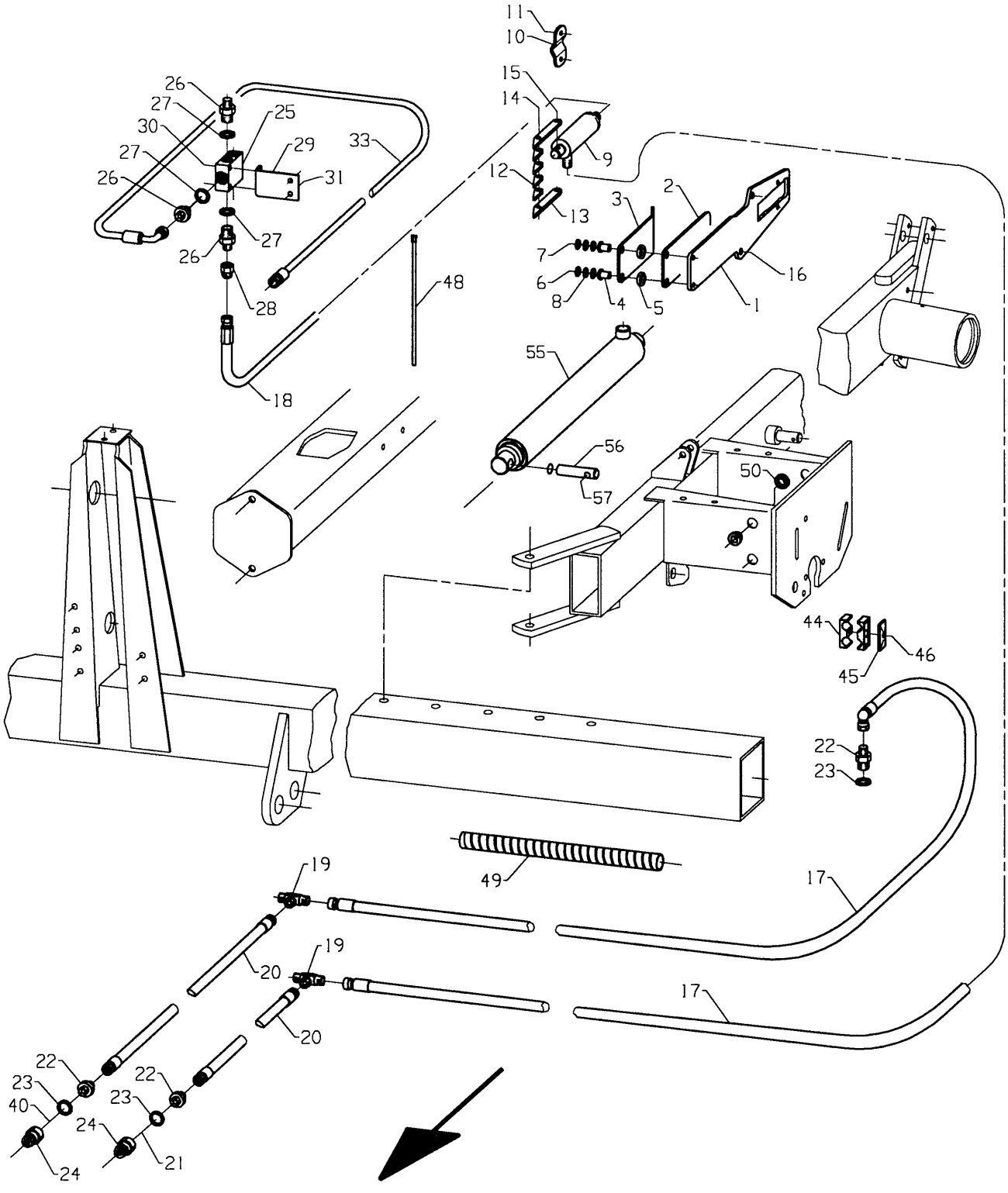
11
10
15
14
9
12
13
3
2
7
6
8
4
5
1
16
26
27
30
27
26
25
29
31
33
27
26
28
18
48
55
56
57
50
44
46
45
22
23
49
17
19
20
19
20
17
22
23
40
24
22
23
24
21

Fig. 22

Utgave: Issue: 3	Redskap: Implement: POTETSETTER SLEPT 3200 / POTATO PLANTER TRAILED 3200	Kverneland
Dato: Date: 94-11	Enhet Unit: HYDRAULISK DRIVKOPLING OG TANKHYDRAULIKK / HYDRAULIC DRIVE COUPLING & HOPPER HYDRAULIC	Fig nr.: 22

Ref. No.	Delenr. Part no.	Ant. Qty.	Gjenstand	Description	Anmerkning Note
1a-15	**218022**	**1**	**DRIVKOPLING VENSTRE MONTERT**	**DRIVING COUPLING LEFT**	
1b-15	**218023**	**1**	**DRIVKOPLING HØGRE MONTERT**	**DRIVING COUPLING RIGHT**	
1	218030	1	KOPLINGSSYLINDERFESTE	COUPLING CYLINDER BRACKET	
2	218032	1	KOPLINGSANLEGGSPLATE	COUPLING PLATE	
3	218033	1	KOPLINGSAKTIVERINGSPLATE	ACTIVATING PLATE	
4	258643	2	LAGERFORING Ø8.2X18.5-Ø13/15.5	BUSHING Ø8.2X17.5-Ø13/15.5	
5	231500	2	BRIKKE Ø13.5-Ø25X5	WASHER Ø13.5-Ø25X5	
6	813425	1	SEKSKANTSKRUE M8X25-8.8 ELZN	HEX. BOLT M8X25-8.8 GALV.	
7	813430	1	SEKSKANTSKRUE M8X30-8.8 ELZN	HEX. BOLT M8X30-8.8 GALV.	
8	860158	3	BRIKKE Ø8.4-17X1.6 ELZN	WASHER Ø8.4-Ø17X1.6	
9	218025	1	SYLINDER DV Ø32/Ø20X172+60	CYLINDER DA	
10	218039	1	LASK 50X4-Ø9/49/Ø9	CLAMP	
11	813450	2	SEKSKANTSKRUE M8X50-8.8 ELZN	HEX. BOLT M8X50-8.8 GALV.	
11	860158	2	BRIKKE Ø8.4-17X1.6 ELZN	WASHER Ø8.4-Ø17X1.6	
11	852158	2	NYLOCKMUTTER M8 ELZN.	NYLOCK NUT M8 GALV.	
12-14	**218035**	**1**	**KOPLINGSKILE KPL.**	**CONNECTION KEY ASSY**	
12	218036	4	KOPLINGSKILE LITEN	SMALL CONNECTION KEY	
13	218037	2	KOPLINGSKILE M/ARM	CONNECTION KEY W/ARM	
14	813445	1	SEKSKANTSKRUE M8X45-8.8 ELZN	HEX. BOLT M8X45-8.8 GALV.	
14	860158	2	BRIKKE Ø8.4-17X1.6 ELZN	WASHER Ø8.4-Ø17X1.6	
14	852158	1	NYLOCKMUTTER M8 ELZN.	NYLOCK NUT M8 GALV.	
15	813550	1	SEKSKANTSKRUE M10X50-8.8 ELZN	HEX. BOLT M10x50-8.8 GALV	
15	860160	1	BRIKKE Ø10.5-Ø21X2 ELZN	WASHER Ø10.5-Ø21X2	
15	852160	1	NYLOCKMUTTER M10 ELZN.	NYLOCK NUT M10 GALV.	
16	827625	4	SENKSKRUE M/6KT.HOL M12X25	INHEX COUNTERSUNK SCREW M12X25	
17	218010	3	HYDR.SLANGE 1/4" 3900 II90GRD	HYDR. HOSE 1/4" 3900	
18	218013	1	HYDR.SLANGE 1/4" 4100 II90GRD	HYDR. HOSE 1/4" 4100	
19	410784	2	UTV. T STYKKE 3/8" BSP	T. CONNECTION 3/8" BSP	
20	218014	2	HYDR.SLANGE 3/8" 3500 II0GRD	HYDR. HOSE 3/8" 3500	
21	410724	1	STØVBESKYTTER BLÅ	DUST CAP BLUE	
22	410747	4	ANSATS 3/8"-1/2" BSP UU	MALE ADAPTOR 3/8"-1/2"	
23	219669	4	PAKNINGSRING 1/2" BOND SEAL	SEAL 1/2" PP 45-D	
24	410755	2	HURTIGKOPLING. 1/2	RAPID COUPLING 1/2	
25	218018	1	KOPLINGSSTYKKE 5X3/8"BSP	CONNECTION PIECE	
26	410748	5	ANSATS 3/8"-3/8" BSP UU	NIPPLE 3/8"-3/8"	
27	410746	5	PAKNINGSRING 3/8" BOND SEAL	BOND SEAL 3/8"	
28	217652	2	HETTE R3/8" INNV. GJ.	CAP R3/8"	
29	218019	1	KOPLINGSTYKKEFESTE	BRACKET	
30	813440	2	SEKSKANTSKRUE M8X40-8.8 ELZN	HEX. BOLT M8X40-8.8 GALV.	
30	860158	2	BRIKKE Ø8.4-17X1.6 ELZN	WASHER Ø8.4-Ø17X1.6	
30	852158	2	NYLOCKMUTTER M8 ELZN.	NYLOCK NUT M8 GALV.	
31	813425	2	SEKSKANTSKRUE M8X25-8.8 ELZN	HEX. BOLT M8X25-8.8 GALV.	
31	860158	2	BRIKKE Ø8.4-17X1.6 ELZN	WASHER Ø8.4-Ø17X1.6	
31	852158	2	NYLOCKMUTTER M8 ELZN.	NYLOCK NUT M8 GALV.	
33a	411884	1	HYDR.SLANGE 3/8" 840 II90GR	HYDR. HOSE 3/8" 840	STD.
33b	307741	1	HYDR.SLANGE 3/8" 1420 II90GRD	HYDR. HOSE 3/8" 1420	FOR 3240
34	218010	2	HYDR.SLANGE 1/4" 3900 II90GRD	HYDR. HOSE 1/4" 3900	
35	821470	2	LÅSESKRUE M8X70-4.6 ELZN.	CARRIAGE BOLT M8X70-4.6 GALV.	
35	860158	2	BRIKKE Ø8.4-17X1.6 ELZN	WASHER Ø8.4-Ø17X1.6	
35	850158	2	SEKSKANTMUTTER M8-8 ELZN.	HEX. NUT M8-8 GALV.	
40	410723	1	STØVBESKYTTER GUL	DUST CAP YELLOW	
44	300875	4	RØRKLAMMERHALVDEL Ø14 DOBBEL	TUBE CLAMP HALF Ø14	
45	300885	2	TOPPLATE 14-18 DOBBEL	PLATE 14-18	
46	860158	2	BRIKKE Ø8.4-17X1.6 ELZN	WASHER Ø8.4-Ø17X1.6	
46	813460	2	SEKSKANTSKRUE M8X60-8.8 ELZN	HEX. BOLT M8X60-8.8 GALV	
48	257772	6	BUNTEBAND 7X250	STRAP 7X250	
49	218042	8	BESKYTTELSESSPIRAL Ø28X380	PROTECTIVE HELICAL	
50	217990	1	BØSSING Ø16.5X10-Ø20/4	BUSHING	
55	217135	2	SYLINDER EV Ø50/Ø50X680+500	CYLINDER	
*	219581		SYLINDERPAKNINGSSETT Ø50/Ø50	SYLINDERPAKNINGSSETT Ø50/Ø50	
56	217385	4	AKSEL Ø20X78-Ø12/14	AXLE	
57	243077	4	LÅSEPINNE	LOCKING PIN	

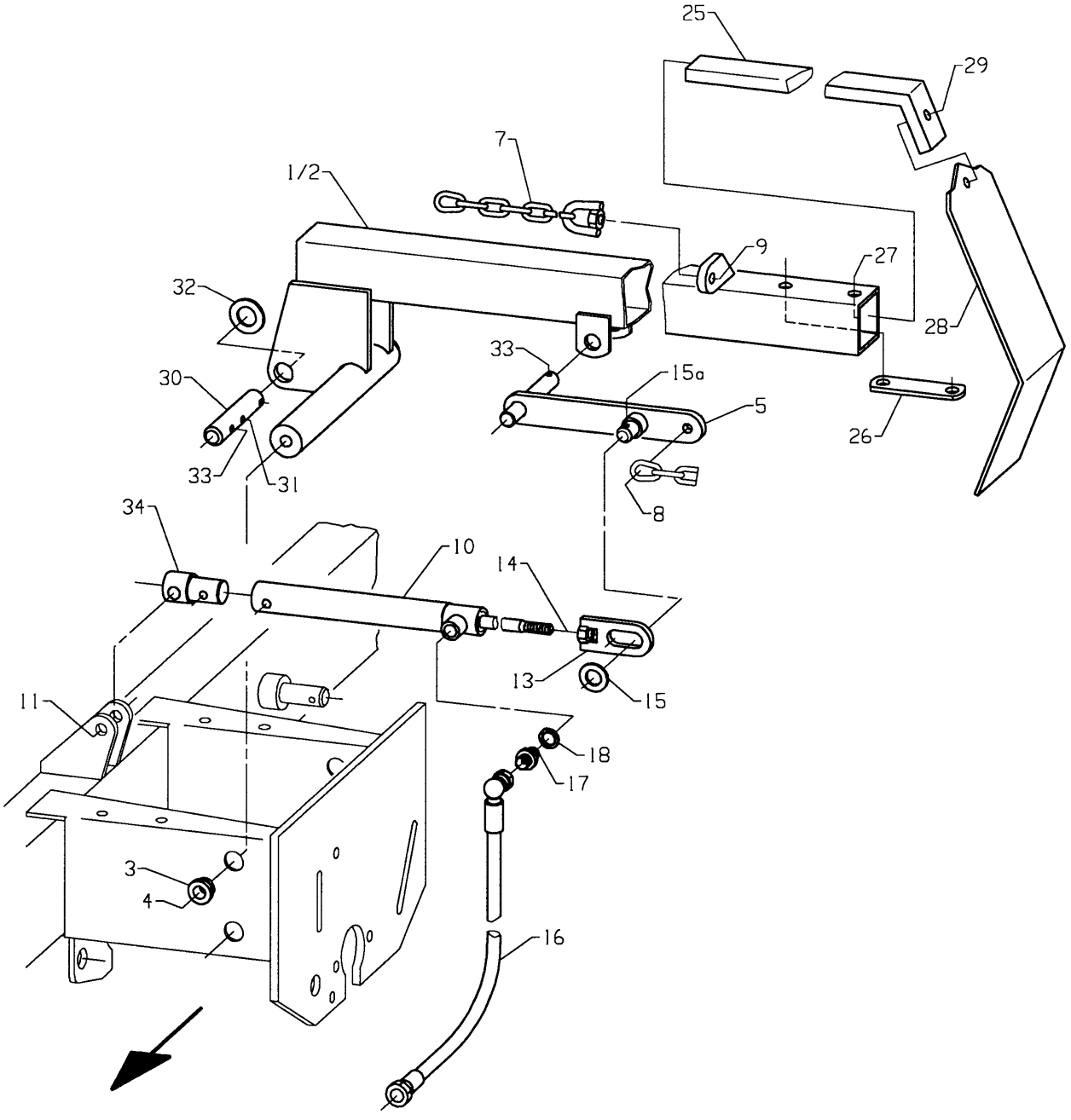

Fig. 23

Utgave: / Issue:	3	Redskap: / Implement:	POTETSETTER SLEPT 3200 POTATO PLANTER TRAILED 3200	Kverneland
Dato: / Date:	94-11	Enhet / Unit	HYDR. MARKØR HYDR. MARKER	Fig nr.: 23

Ref. No.	Delenr. Part no.	Ant. Qty.	Gjenstand	Description	Anmerkning Note
			MARKØR HYDRAULISK KOMPL.	**MARKER HYDRAULIC ASSY**	
1	217680	1	MARKØRARM VENSTRE	LEFT MARKER ARM	
2	217681	1	MARKØRARM HØGRE	RIGHT MARKER ARM	
3	288814	2	BØSSING	BUSHING	
4	860163	2	BRIKKE Ø13-Ø24X2.5	WASHER Ø13-Ø24X2.5	
4	813660	2	SEKSKANTSKRUE M12X60-8.8 GALV.	HEX. BOLT M12X60-8.8 GALV.	
5	217690	2	LENKEARM SV.	CONNECTION ARM	
6	860166	4	BRIKKE Ø17-Ø30X3	WASHER Ø17-Ø30X3	
6	865270	2	SPLINT 5X20 GALV.	SPLIT PIN 5X20	
7	217670	2	KJETTING	CHAIN	
8	813530	2	SEKSKANTSKRUE M10X30-8.8 GALV.	HEX. BOLT M10X30-8.8 GALV.	
8	850160	2	SEKSKANTMUTTER M10-8 GALV.	HEX. NUT M10-8 GALV.	
8	860160	4	BRIKKE Ø10.5-Ø21X2	WASHER Ø10.5-Ø21X2	
9	810550	2	6KT.SKR.HELGJ.M10X50-8.8 GALV.	HEX. BOLT M10X50-8.8 GALV.	
9	850160	2	SEKSKANTMUTTER M10-8 GALV.	HEX. NUT M10-8 GALV.	
10	217655	2	SYLINDER TREKK Ø25/Ø12X274+120	CYLINDER	
10a	257051	1	AVSTRYKER	CLEANER	
10b	872010	1	O-RING 11.60X2.40	O-RING 11.6X16.4X2.4	
10c	257053	1	STEMPELPAKNING	PISTON SEAL	
11	813680	2	SEKSKANTSKRUE M12X80-8.8 GALV	HEX. BOLT M12X80-8.8 GALV	
11	860163	2	BRIKKE Ø13-Ø24X2.5	WASHER Ø13-Ø24X2.5	
11	850162	2	SEKSKANTMUTTER M12-8 GALV	HEX. NUT M12-8 GALV.	
11	852162	2	NYLOCKMUTTER M12 GALV	NYLOCK NUT M12 GALV	
13	217665	2	SYLINDERØRE	CYLINDER EAR	
14	850160	2	SEKSKANTMUTTER M10-8 GALV.	HEX. NUT M10-8 GALV.	
15	860166	2	BRIKKE Ø17-Ø30X3	WASHER Ø17-Ø30X3	
15a	867056	2	RINGPINNE Ø6 ELZN	RING PIN 6 GALV	
16	411123	2	HYDR.SLANGE 1/4" 2720 II90GRD	HYDRAULIC HOSE 1/4" 2720	
17	300957	2	ANSATS R1/4"-R1/4"	NIPPLE R1/4"-R1/4"	
18	300966	2	PAKNINGSRING 1/4" BOND SEAL	SEAL 1/4"	
25	215946	2	MARKØRSTANG 40X12	MARKER BAR	
26	255889	2	LASK 32X8-M12/70/M12	CLAMP 32X10-M12/70/M12	
27	813635	4	SEKSKANTSKRUE M12X35-8.8 GALV.	HEX. BOLT M12X35-8.8 GALV	
28	215948	2	MARKØR FOR 40X12 STANG	MARKER FOR BAR	
29	813530	2	SEKSKANTSKRUE M10X30-8.8 GALV.	HEX. BOLT M10X30-8.8 GALV.	
29	860160	2	BRIKKE Ø10.5-Ø21X2	WASHER Ø10.5-Ø21X2	
29	852160	2	NYLOCKMUTTER M10 GALV	NYLOCK NUT M10 GALV.	
30	217686	2	LÅSEPINNE Ø20	LOCK PIN	
31	866330	2	SPENNHYLSE 6X30 ELZN	TENSION PIN 6X30X1,25	
32	860170	6	BRIKKE Ø21-Ø37X3	WASHER Ø21-Ø37X3	
33	865270	2	SPLINT 5X20 GALV.	SPLIT PIN 5X20	
34	217663	2	SYLINDERLOKK M/ØRE	CYLINDER COVER W/EAR	

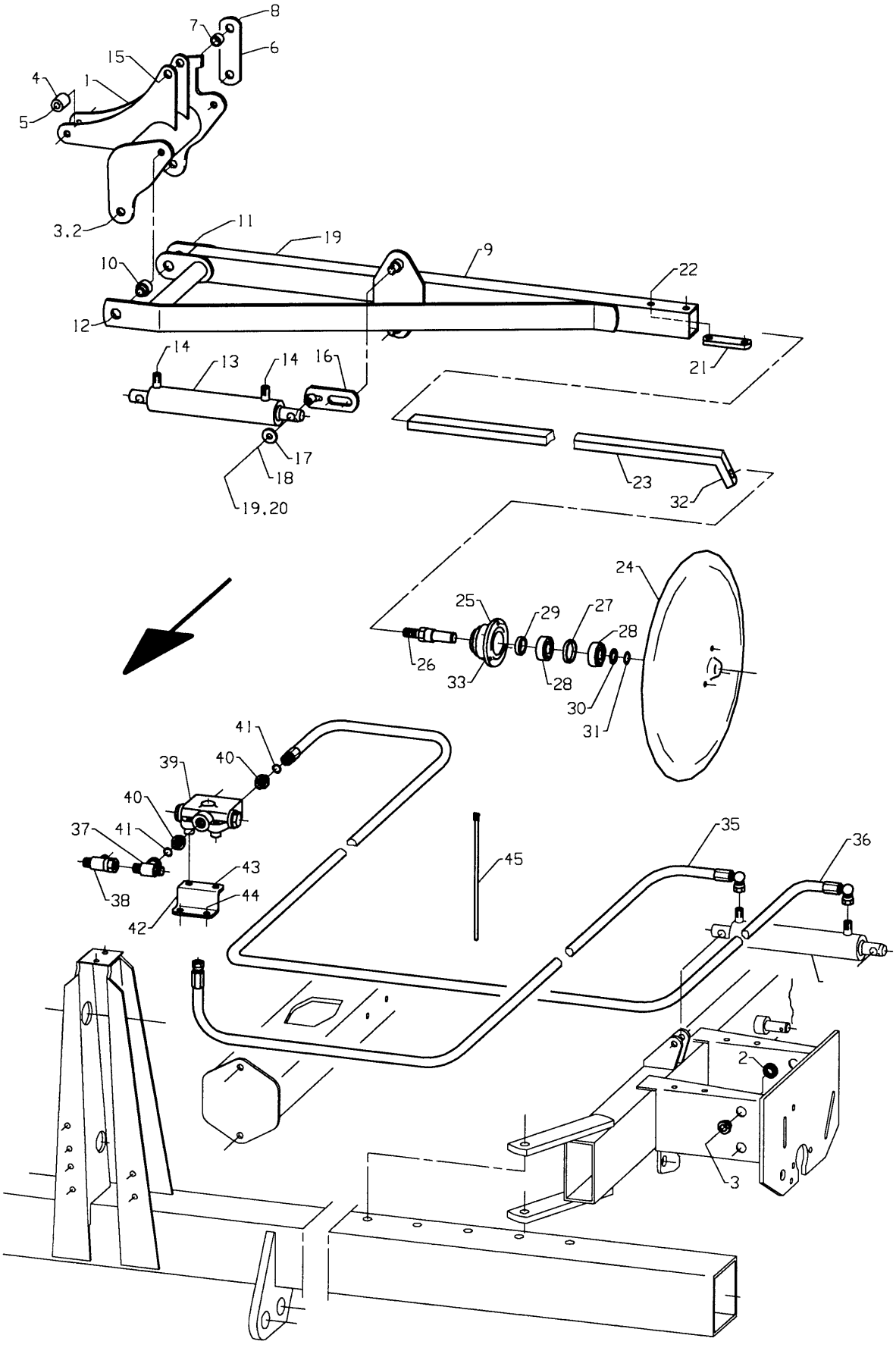
8
7
6
15
4
1
5
3.2
11
19
9
22
10
12
14
13
14
16
21
17
18
19.20
23
32
24
25
29
27
28
26
33
28
30
31
41
39
40
40
37
41
43
38
44
42
45
35
36
2
3

Fig. 24

Utgave: Issue: 3	Redskap: Implement: POTETSETTER SLEPT 3200 / POTATO PLANTER TRAILED 3200	Kverneland
Dato: Date: 94-11	Enhet Unit MARKØR DV / MARKER DA	Fig nr.: 24

Ref. No.	Delenr. Part no.	Ant. Qty.	Gjenstand	Description	Anmerkning Note
1a-34	**217970**	**1**	**MARKØR DV V. KPL.**	**MARKER DA LEFT**	
1b-34	**217971**	**1**	**MARKØR DV H. KPL.**	**MARKER DA LEFT**	
1a	217980	1	RAMMEFESTE V. SV.	FRAME BRACKET LEFT	
1b	217981	1	RAMMEFESTE H. SV.	RIGHT FRAME BRACKET	
2	217990	2	BØSSING Ø16.5X10-Ø20/4	BUSHING	
3	813845	2	SEKSKANTSKRUE M16X45-8.8 ELZN	HEX. BOLT M16x45-8.8 GALV.	
3	860166	2	BRIKKE Ø17-Ø30X3 ELZN	WASHER Ø17-Ø30X3	
3	852166	2	NYLOCKMUTTER M16 ELZN.	NYLOCK NUT M16 GALV	
4	256310	1	HYLSE Ø12.4-Ø25X38	SPACER Ø12.4-Ø25X38	
5	813680	1	SEKSKANTSKRUE M12X80-8.8 ELZN	HEX. BOLT M12X80-8.8 GALV	
5	860163	2	BRIKKE Ø13-Ø24X2.5 ELZN	WASHER Ø13-Ø24X2.5	
5	852162	1	NYLOCKMUTTER M12 ELZN.	NYLOCK NUT M12 GALV	
6	302048	1	LASK 40X6-Ø17/90/Ø17	CLAMP	
7	258642	2	HYLSE Ø16.1-Ø21.3X17	SPACER Ø16.1-Ø21.3X17	
8	813890	1	SEKSKANTSKRUE M16X90-8.8 ELZN	HEX. BOLT M16X90-8.8 GALV	
8	860166	2	BRIKKE Ø17-Ø30X3 ELZN	WASHER Ø17-Ø30X3	
8	850166	1	SEKSKANTMUTTER M16-8 ELZN.	HEX. NUT M16 GALV	
8	852166	1	NYLOCKMUTTER M16 ELZN.	NYLOCK NUT M16 GALV	
9	217974	1	MARKØRARM	MARKER ARM	
10	217988	3	LAGERFORING Ø12.4X31-Ø20/12.5	BEARING LINING	
11	813690	1	SEKSKANTSKRUE M12X90-8.8 ELZN	HEX. BOLT M12X90 8.8	
11	860163	1	BRIKKE Ø13-Ø24X2.5 ELZN	WASHER Ø13-Ø24X2.5	
11	852162	1	NYLOCKMUTTER M12 ELZN.	NYLOCK NUT M12 GALV	
12	813660	1	SEKSKANTSKRUE M12X60-8.8 ELZN	HEX. BOLT M12X60-8.8 GALV.	
12	860163	2	BRIKKE Ø13-Ø24X2.5 ELZN	WASHER Ø13-Ø24X2.5	
12	852162	1	NYLOCKMUTTER M12 ELZN.	NYLOCK NUT M12 GALV	
13	310089	1	SYLINDER DV Ø40/Ø25X300+180	CYLINDER DA Ø40/Ø25X300+180	
*	310092		SYLINDERPAKNINGSSETT Ø40/Ø25	CYLINDER SEAL KIT Ø40/Ø25	
14	300953	2	STRUPENIPPEL M8 Ø1	RESTRICTOR M8 Ø1	
15	813880	1	SEKSKANTSKRUE M16X80-8.8 ELZN	HEX. BOLT M16X80-8.8 GALV	
15	850166	1	SEKSKANTMUTTER M16-8 ELZN.	HEX. NUT M16 GALV	
15	860166	1	BRIKKE Ø17-Ø30X3 ELZN	WASHER Ø17-Ø30X3	
15	852166	1	NYLOCKMUTTER M16 ELZN.	NYLOCK NUT M16 GALV	
16	206559	1	SPORPLATE SV.	PLATE	
17	270448	1	BRIKKE Ø11-Ø30X4 GALV	WASHER Ø11-Ø30X4	
18	813520	1	SEKSKANTSKRUE M10X20-8.8 ELZN	HEX. BOLT M10X20-8.8 GALV.	
19	867056	2	RINGPINNE Ø6 ELZN	RING PIN 6 GALV	
20	860166	1	BRIKKE Ø17-Ø30X3 ELZN	WASHER Ø17-Ø30X3	
21	255889	1	LASK 32X8-M12/70/M12	CLAMP 32X10-M12/70/M12	
22	813635	2	SEKSKANTSKRUE M12X35-8.8 ELZN	HEX. BOLT M12X35-8.8 GALV	
23	217992	1	MARKØRSTANG V.	MARKER STAY LEFT	
24-34	**271248**	**1**	**RULLESKJÆR 450 M/KULELAGER KPL**	**DISC ROLLER 450 ASSY.**	
24	271250	1	RULLESKJÆRPLATE 450	DISC 450	
25-34	**271252**	**1**	**KULELAGERBOSS M16 AKSEL**	**BALL BEARING BOSS M16 SHAFT**	
25	271252	1	KULELAGERBOSS M16 AKSEL	BALL BEARING BOSS M16 SHAFT	
26	271254	1	AKSEL	SHAFT	
27	271255	1	AVSTANDSRING	SPACER	
28	870720	2	KULELAGER 6204	BALL BEARING 6204	
29	871254	1	TETNINGSRING 2535/7	OIL SEAL 25357	
30	868604	1	STØTTERING 20X28X2	SUPPORT RING 20X28X2.0	
31	868420	1	LÅSERING UTV. A20X1.2	CIRCLIP A20X1.2	
32	852166	1	NYLOCKMUTTER M16 ELZN.	NYLOCK NUT M16 GALV	
33	873540	1	SMØRENIPPEL M6 RETT	GREASE NIPPLE M6	
34	813416	3	SEKSKANTSKRUE M8X16-8.8 ELZN	HEX. BOLT M8X16-8.8 GALV.	
35-45	**217969**	**1**	**MARKØR DV HYDR. OPPLEGG**	**MARKER DA HYDR. ARRANGEMENT**	
35	218011	2	HYDR.SLANGE 1/4" 2850 II90GRD	HYDR. HOSE 1/4" 2850	
36	218012	2	HYDR.SLANGE 1/4" 3050 II90GRD	HYDR. HOSE 1/4" 3050	
37	300996	1	T-3/8"-3/8"UTV./3/8"INNV.SVIV.	T-JUNCTION R3/8"-R3/8"	
38	411885	1	T-KOPLING 3/8" BSP UIU	T-COUPLING 3/8" BSP	
39	217995	1	SEKVENSVENTIL 2 POS. 3 VEIS	SEQUENTIAL VALVE	

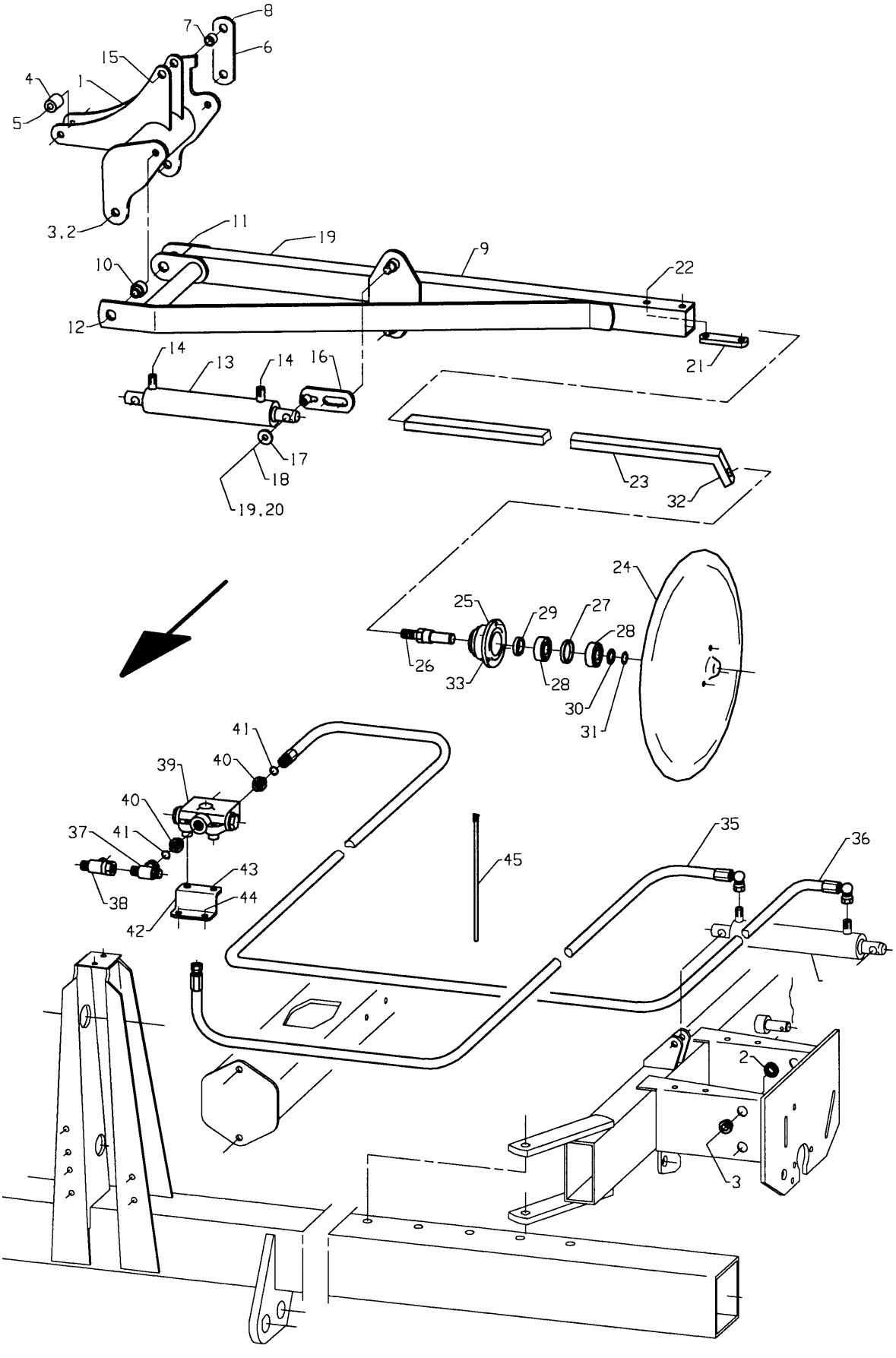
8
7
6
15
4
1
5
3.2
11
19
9
22
10
12
14
13
14
16
21
17
18
19.20
23
32
24
25
29
27
28
26
33
28
30
31
41
39
40
40
37
41
43
38
44
42
45
35
36
2
3

Fig. 24

Utgave: / Issue:	3	Redskap: / Implement:	POTETSETTER SLEPT 3200 POTATO PLANTER TRAILED 3200	Kverneland
Dato: / Date:	94-11	Enhet / Unit	MARKØR DV MARKER DA	Fig nr.: 24

Ref. No.	Delenr. Part no.	Ant. Qty.	Gjenstand	Description	Anmerkning Note
40	217996	3	ANSATS R3/8"-3/4"UNF(SAE)	NIPPLE R3/8"-3/5"UNF(SAE)	
41	872016	3	O-RING 17,12X2,62	O-RING	
42	217998	1	VENTILFESTE	VALVE BRACKET	
43	813470	2	SEKSKANTSKRUE M8X70-8.8 ELZN	HEX. BOLT M8X70-8.8 GALV.	
43	860158	4	BRIKKE Ø8.4-17X1.6 ELZN	WASHER Ø8.4-Ø17X1.6	
43	852158	2	NYLOCKMUTTER M8 ELZN.	NYLOCK NUT M8 GALV.	
44	813425	2	SEKSKANTSKRUE M8X25-8.8 ELZN	HEX. BOLT M8X25-8.8 GALV.	
44	860158	4	BRIKKE Ø8.4-17X1.6 ELZN	WASHER Ø8.4-Ø17X1.6	
44	852158	2	NYLOCKMUTTER M8 ELZN.	NYLOCK NUT M8 GALV.	
45	257772	4	BUNTEBAND 7X250	STRAP 7X250	

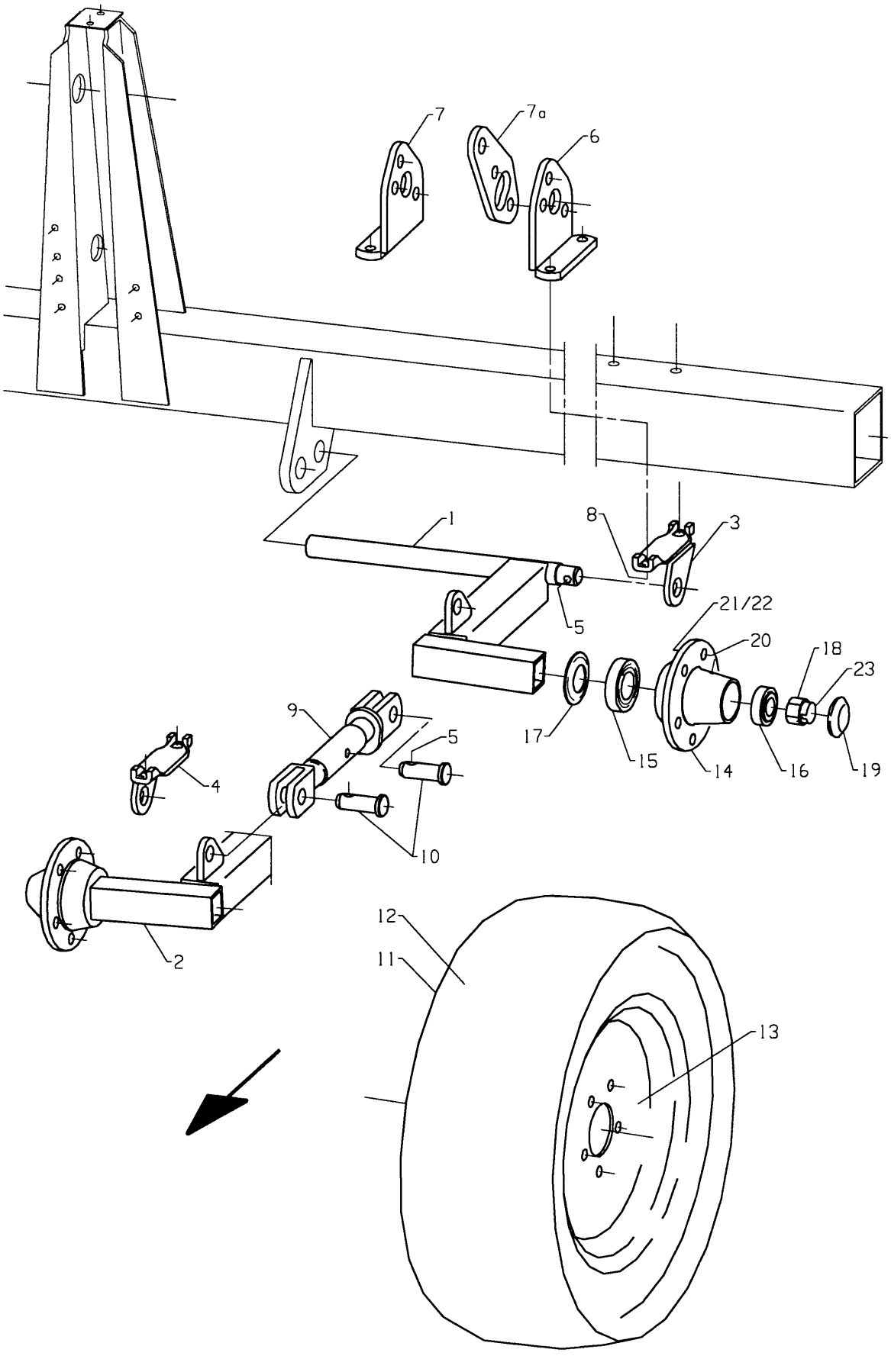

Fig. 25

Utgave: / Issue:	3	Redskap: / Implement:	POTETSETTER SLEPT 3200 POTATO PLANTER TRAILED 3200	Kverneland
Dato: / Date:	94-11	Enhet / Unit	STØTTEHJUL SUPPORTING WHEEL	Fig nr.: 25

Ref. No.	Delenr. Part no.	Ant. Qty.	Gjenstand	Description	Anmerkning Note
1-9	**217201**	**1**	**STØTTEHJUL V. KOMPL.**	**LEFT SUPPORT WHEEL ASSY**	
1-9	**217202**	**1**	**STØTTEHJUL H. KOMPL.**	**RIGHT SUPPORT WHEEL ASSY**	
1	217205	1	HJULARM M/NAV V.	WHEEL ARM LEFT W/HUB	
2	217206	1	HJULARM M/NAV H.	WHEEL ARM RIGHT W/HUB	
3	217215	1	HJULARMFESTE V.	WHEEL ARM BRACKET LEFT	
4	217216	1	HJULARMFESTE H.	WHEEL ARM BRACKET RIGHT	
5	867061	6	RINGPINNE Ø12 (7/16") ELZN	RING PIN 12 (7/16") GALV.	
6	217225	1	STILLSTAGFESTE V. SV.	LEFT STAY BRACKET	
7	217226	1	STILLSTAGFESTE H.SV.	RIGHT STAY BRACKET	
7a	217228	1	ARM	ARM	
8	813905	4	SEKSKANTSKRUE M16X150-8.8 GALV	HEX.BOLT M16X150-8.8 GALV	
9	703151	2	STREKKFISK	TENSION ROD	
10	703152	4	BOLT M/HODE Ø25X50	BOLT	
10a	867061	2	RINGPINNE Ø12 (7/16") ELZN	RING PIN 12 (7/16") GALV.	
11-13	**411914**	**2**	**HJUL 11.00/65-12, 10L (5 HULL)**	**WHEEL ASSY 11.0/65-12**	
11	410525	2	DEKK 11.0/65-12, 10 PLY	TYRE 11.0/65-12, 10 PLY	
12	410526	2	SLANGE FOR DEKK 11.0/65X12	TUBE FOR TYRE 11.0/65X12	
13	411916	2	FELG 9.00 X 12	RIM 9.00 X 12	
14-23	**411903**	**2**	**NAV KOMPL.**	**HUB ASSY**	
14	411904	2	NAV HUS	HUB	
15	411905	2	LAGER INDRE 45X85X20,75	INNER BEARING	
16	411906	2	LAGER YTRE 30X62X17,25	OUTER BEARING	
17	411907	2	TETNINGSRING	SEAL	
18	411908	2	KRONEMUTTER	NUT	
19	410521	2	NAVKAPSEL FAD	CAP	
20	411910	10	RILLEBOLT M16X1.5X43	WHEEL BOLT	
21	411911	10	HJULMUTTER M16X1.5	WHEEL NUT	
22	215671	10	FJØRSKIVE Ø16.5 M.KULE R14	WASHER	
23	865250	10	SPLINT 4X50 GALV.	SPLIT PIN 4X50 GALV	

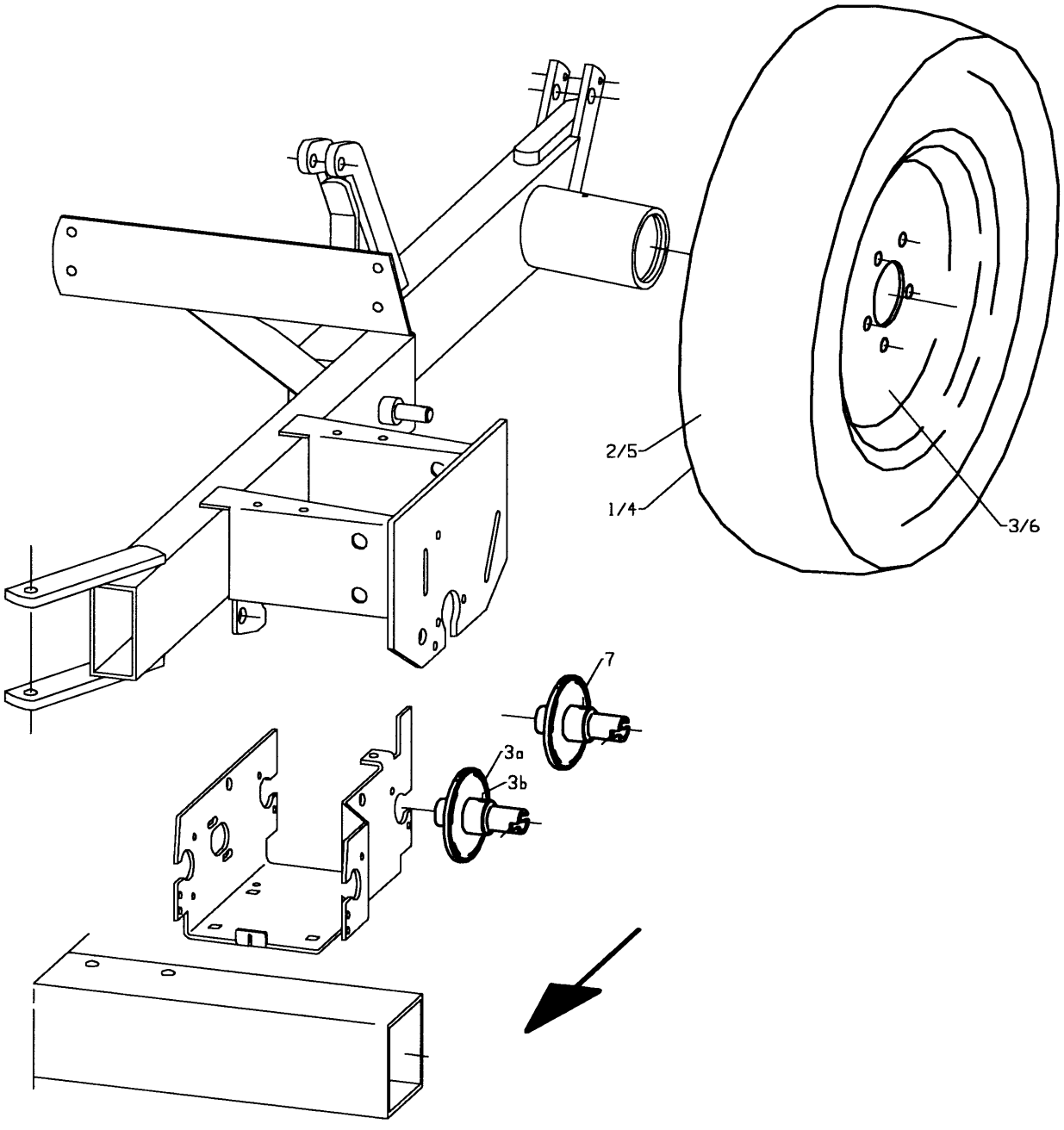

Fig. 26

Utgave: / Issue:	3	Redskap: / Implement:	POTETSETTER SLEPT 3200 POTATO PLANTER TRAILED 3200	Kverneland
Dato: / Date:	94-11	Enhet / Unit	HJUL WHEEL	Fig nr.: 26

Ref. No.	Delenr. Part no.	Ant. Qty.	Gjenstand	Description	Anmerkning Note
1-3	**219760**	**1**	**HJUL 9.50-24 M/RIBBER V.**	**WHEEL W/RIM 9,5-24 LUGGED LEFT**	
1-3	**219761**	**1**	**HJUL 9.50-24 M/RIBBER H.**	**WHEEL W/RIM 9,5-24 LUGGED R.**	
1	219762	2	DEKK 9,50-24", 8PLY M/RIBBER	TYRE 9.5-2 LUGGED	
2	219763	2	SLANGE 9.50-24"	TUBE FOR TYRE 9.5-24	
3	219764	2	FELG W8X24	RIM W8X24	
3a	217451	1	KJEDEHJUL 5/8" 23T SV.	SPROCKET	
3b	831616	1	GJENGESTIFT 6KT.HOL M12X16	HEADLESS SCREW M12X16	
4-6	**217620**	**1**	**HJUL 11.2-24 8 LAG V. M/RIBBER**	**WHEEL W/RIM 11.2-24 LUGGED L.**	
4-6	**217621**	**1**	**HJUL 11.2-24 8 LAG H. M/RIBBER**	**WHEEL W/RIM 11.2-24 LUGGED R.**	
4	217622	2	DEKK 11.2-24 8 LAG M/RIBBER	TYRE 11.2-24 LUGGED	
5	310098	2	SLANGE 12.4X24	TUBE 12.4X24	
6	310099	2	FELG W10x24,10/160/205	RIM W10X24,10/160/205	
7	217452	2	KJEDEHJUL 5/8" 22T-Ø25 SV.	SPROCKET 5/8" 22T	

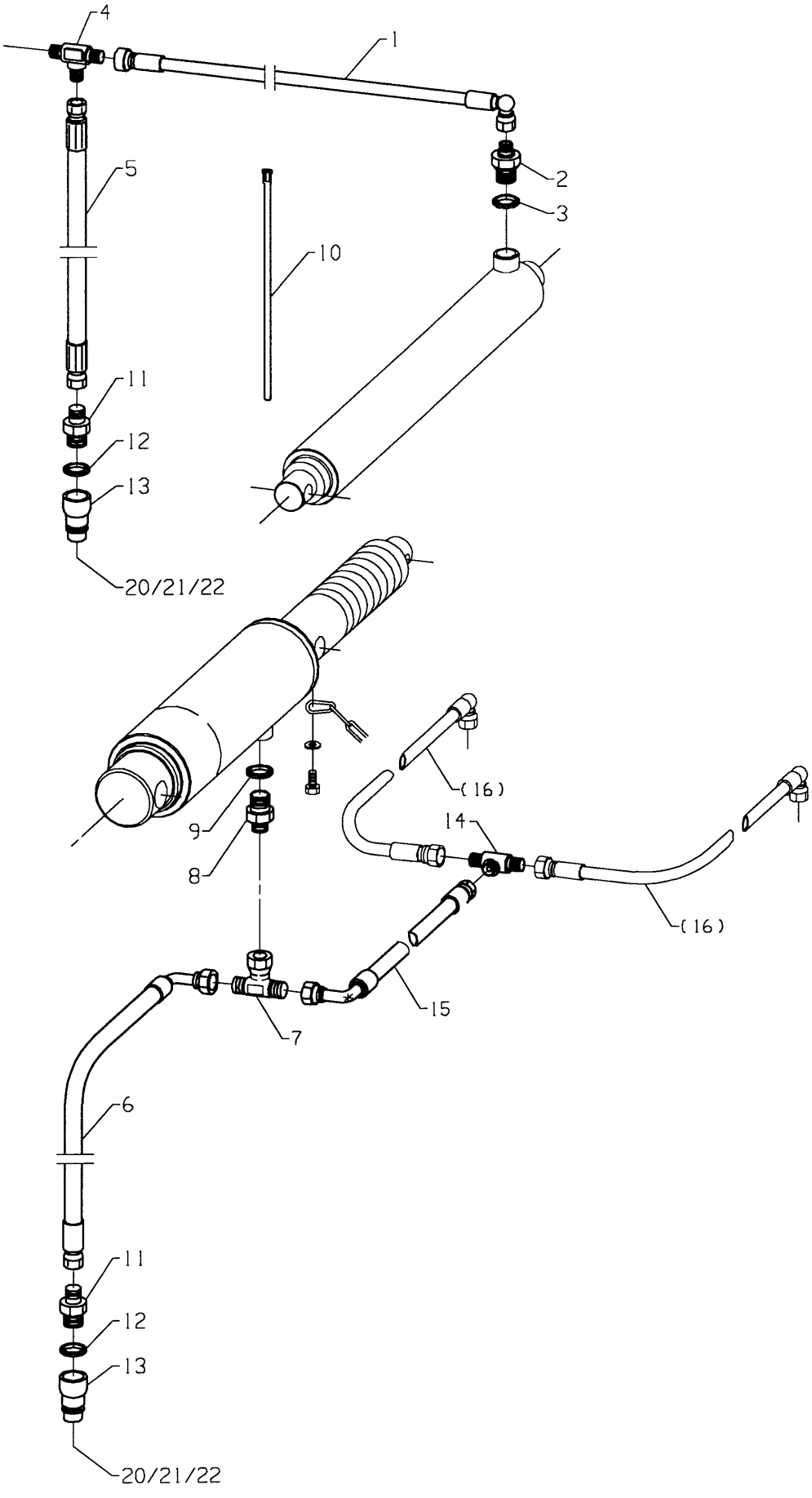

Fig. 27

Utgave: Issue: 3	Redskap: Implement: POTETSETTER SLEPT 3200 / POTATO PLANTER TRAILED 3200	Kverneland
Dato: Date: 94-11	Enhet Unit: DIV HYDRAULIKK T.O.M 93-MOD (SER.NR.-204) (DIV HYDRAULIC / DIV HYDRAULIC UP UNTIL 93-MOD (SER.NO-204)	Fig nr.: 27

Ref. No.	Delenr. Part no.	Ant. Qty.	Gjenstand	Description	Anmerkning Note
			HYDRAULIKK	**HYDRAULIC**	
1	410783	2	HYDR.SLANGE 1/4" 4250 II90GRD	HYDRAULIC HOSE 1/4" 4250	
2	219668	2	GJ.OVERGANG R1/4"-R1/2" U-U	MALE ADAPTOR 1/4"-1/2" BSP	
3	219669	2	PAKNINGSRING 1/2" BOND SEAL	SEAL 1/2" PP 45-D	
4	410784	1	UTV. T STYKKE 3/8" BSP	T. CONNECTION 3/8" BSP	
5	410754	1	HYDR.SLANGE 3/8" 2785 II0GRD	HYDR. HOSE 3/8" 2750	
6	412059	1	HYDR.SLANGE 3/8" 2800 II90GRD	HYDR. HOSE 3/8" 2800 II90DG	
7	300996	1	T-3/8"-3/8"UTV./3/8"INNV.SVIV.	T-JUNCTION R3/8"-R3/8"	
8	410747	1	ANSATS-OVERGANG 3/8"-1/2"	MALE ADAPTOR 3/8"-1/2"	
9	219669	1	PAKNINGSRING 1/2" BOND SEAL	SEAL 1/2" PP 45-D	
10	257772	4	BUNTEBAND 7X250	STRAP 7X250	
11	410747	2	ANSATS-OVERGANG 3/8"-1/2"	MALE ADAPTOR 3/8"-1/2"	
12	219669	2	PAKNINGSRING 1/2" BOND SEAL	SEAL 1/2" PP 45-D	
13	410755	2	HURTIGKOPLING. 1/2	RAPID COUPLING 1/2	
14	410784	1	UTV. T STYKKE 3/8" BSP	T. CONNECTION 3/8" BSP	
15	411883	1	HYDR.SLANGE 3/8" 500 II90GR	HYDR. HOSE 3/8" 500	
16	411123	2	HYDR.SLANGE 1/4" 2720 II90GRD	HYDRAULIC HOSE 1/4" 2720	
20	217675	2	SLANGEPARKERINGSHOLDER	HOLDER	
21	259345	2	BRIKKE Ø18.5-Ø34.5X1.25	WASHER Ø18.5-Ø34.5X1.25	
22	217676	2	SLANGEPARKERINGSLOKK	COVER	

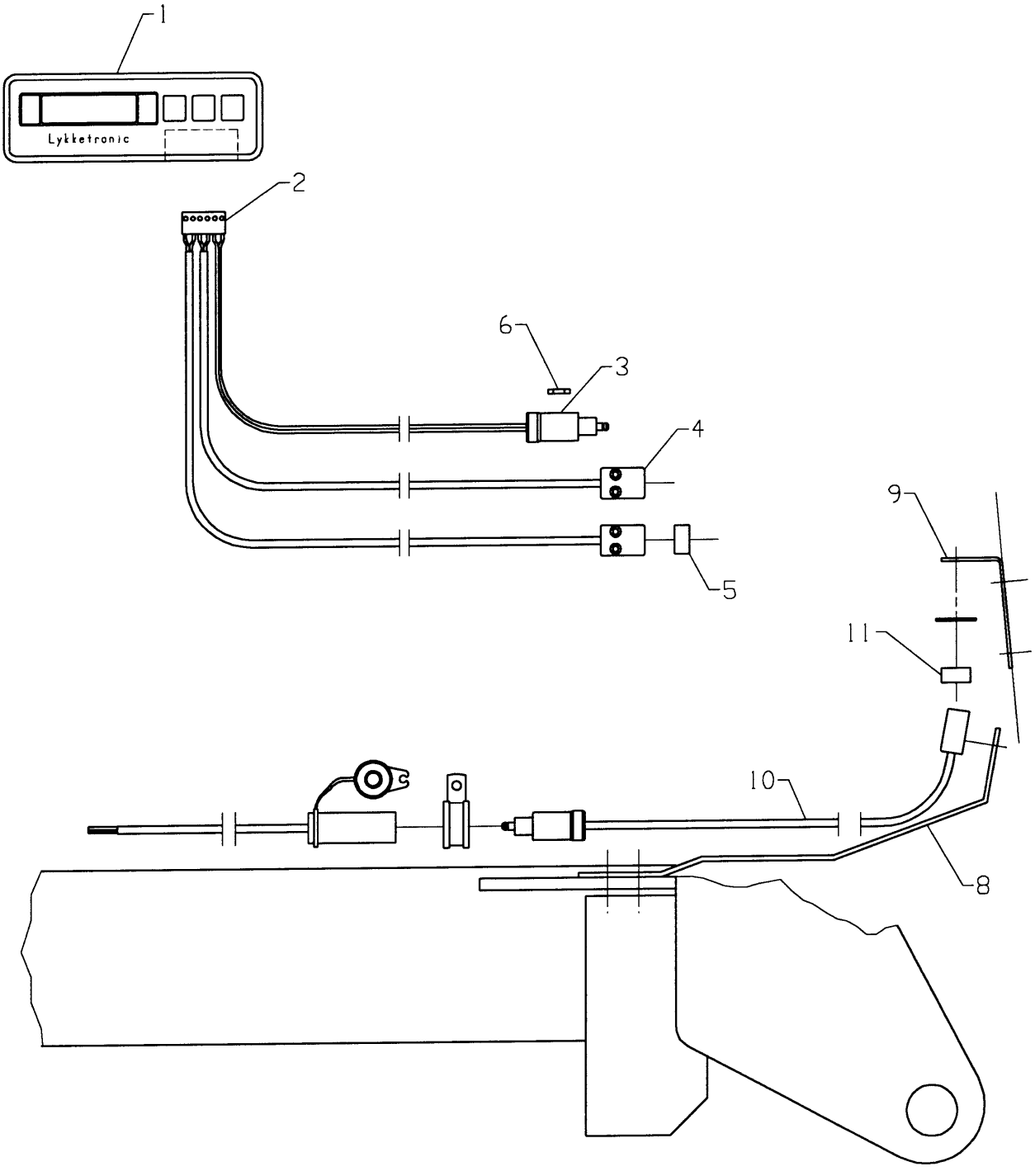

Fig. 28

Utgave: / Issue:	3	Redskap: / Implement:	POTETSETTER SLEPT 3200 POTATO PLANTER TRAILED 3200	Kverneland
Dato: / Date:	94-11	Enhet / Unit	AREALMÅLER ACREAGE METER	Fig nr.: 28

Ref. No.	Delenr. Part no.	Ant. Qty.	Gjenstand	Description	Anmerkning Note
1	216145	1	AREALMÅLER PANEL	ACREAGE METER PANEL	
2	216146	1	6-POLET MULTISTØPSEL	6 ROW CONNECTOR	
3	302234	1	STØPSEL	PLUG	
4	216093	1	SENSOR M/5M KABEL	SENSOR W/5M CABLE	
5	216147	1	MAGNET Ø20MMX10X4	MAGNET	
6	216068	1	SIKRING 500mA	FUSE, 500MA	
8	216097	1	SENSORHOLDER	SENSOR BRACKET	
9	216098	1	MAGNETHOLDER	MAGNET BRACKET	
10	216094	1	AVBRUDDSSENSOR M/SKJØTEKABEL	INTERR. SENSOR W/JOINT CABLE	
11	216147	1	MAGNET Ø20MMX10X4	MAGNET	

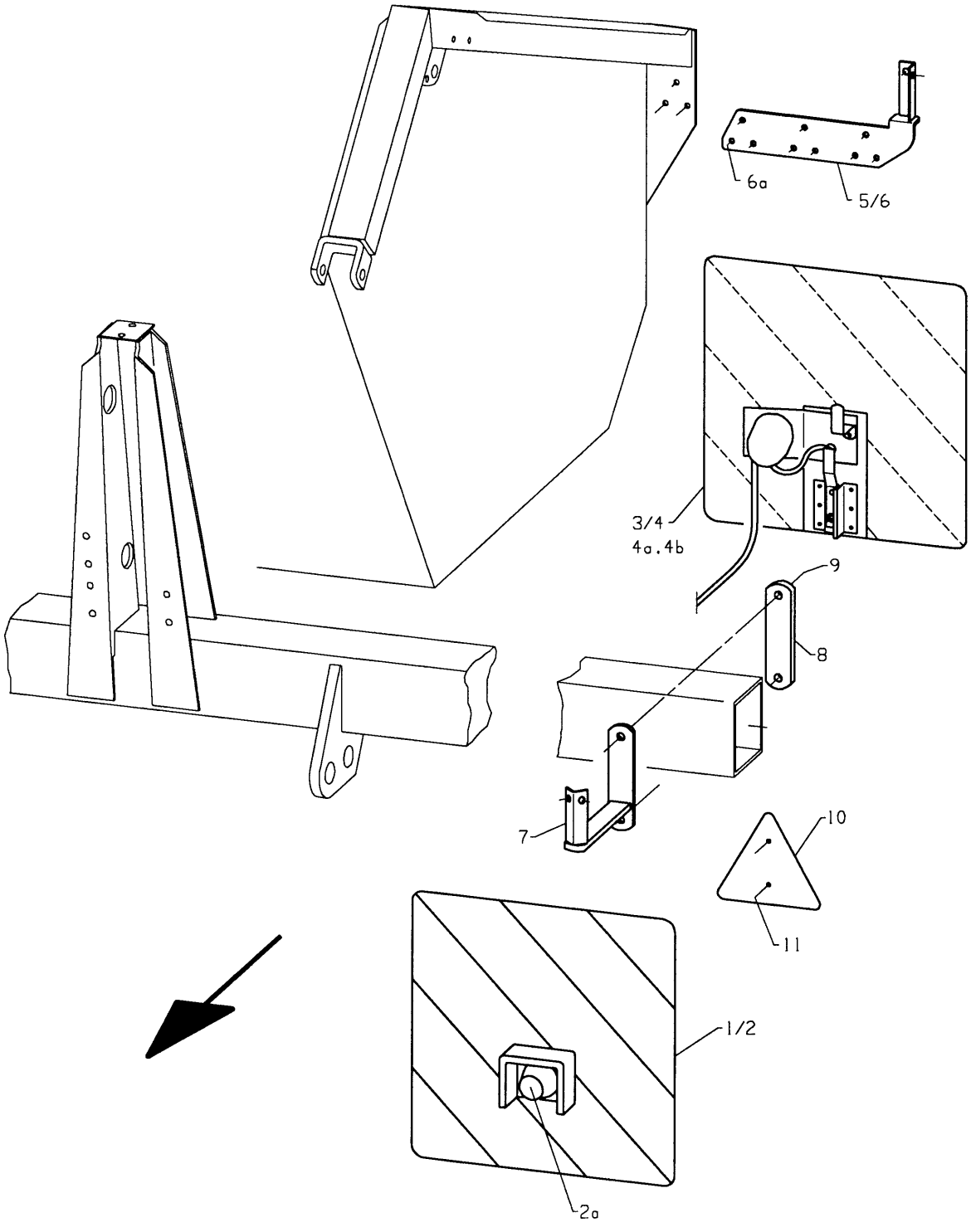

Fig. 29

Utgave: / Issue:	3	Redskap: / Implement:	POTETSETTER SLEPT 3200 POTATO PLANTER TRAILED 3200	Kverneland
Dato: / Date:	94-11	Enhet / Unit	LYSUTSTYR LIGHT EQUIPMENT	Fig nr.: 29

Ref. No.	Delenr. Part no.	Ant. Qty.	Gjenstand	Description	Anmerkning Note
1	314815	1	BAKLYS V. M/VARSELPLATE	REAR LIGHT LEFT W/WARNINGPLATE	
2	314816	1	BAKLYS H. M/VARSELPLATE	REAR LIGHT RIGHT W/WARNINGPLA	
2a	412203	1	LYSPÆRE 12V 5W S8.5	LIGHT BULB 12V 5W	
3	216115	1	MARKERINGSLYS V. M/VARSELPLATE	RIGHT MARKER LIGHT	
4	216116	1	MARKERINGSLYS H. M/VARSELPLATE	RIGHT MARKER LIGHT W/WARNINGP	
4a	412201	1	LYSPÆRE 12V 10W BA 15 S	LIGHT BULB 12V 10W	
4b	412202	2	LYSPÆRE 12V 21W BA 15 S	LIGHT BULB 12V 21W	
5	216121	1	FESTE BAKRE V. SV.	LEFT REAR BRACKET	
6	216122	1	FESTE BAKRE H. SV.	RIGHT REAR BRACKET	
6a	813430	6	SEKSKANTSKRUE M8X30-8.8 ELZN	HEX. BOLT M8X30-8.8 GALV.	
6a	860158	4	BRIKKE Ø8.4-17X1.6 ELZN	WASHER Ø8.4-Ø17X1.6	
6a	852158	6	NYLOCKMUTTER M8 ELZN.	NYLOCK NUT M8 GALV.	
7	216126	2	FESTE FRAMRE SV.	FRONT BRACKET	
8	215295	2	LASK 40X8-Ø13/133/Ø13	CLAMP 40X8-Ø13/133/Ø13	
9	813705	4	SEKSKANTSKRUE M12X150-8.8 ELZN	HEX. BOLT M12X150-8.8	
9	860163	4	BRIKKE Ø13-Ø24X2.5 ELZN	WASHER Ø13-Ø24X2.5	
9	852162	4	NYLOCKMUTTER M12 ELZN.	NYLOCK NUT M12 GALV	
10	403210	2	REFLEKSTREKANT	TRIANGLE REFLEX	
11	837266	4	SYL.SKRUE M/SPOR M5X15 ELZN.	PAN SCREW M5X16	
11	850155	4	SEKSKANTMUTTER M5-8 ELZN.	HEX. NUT M5 GALV	

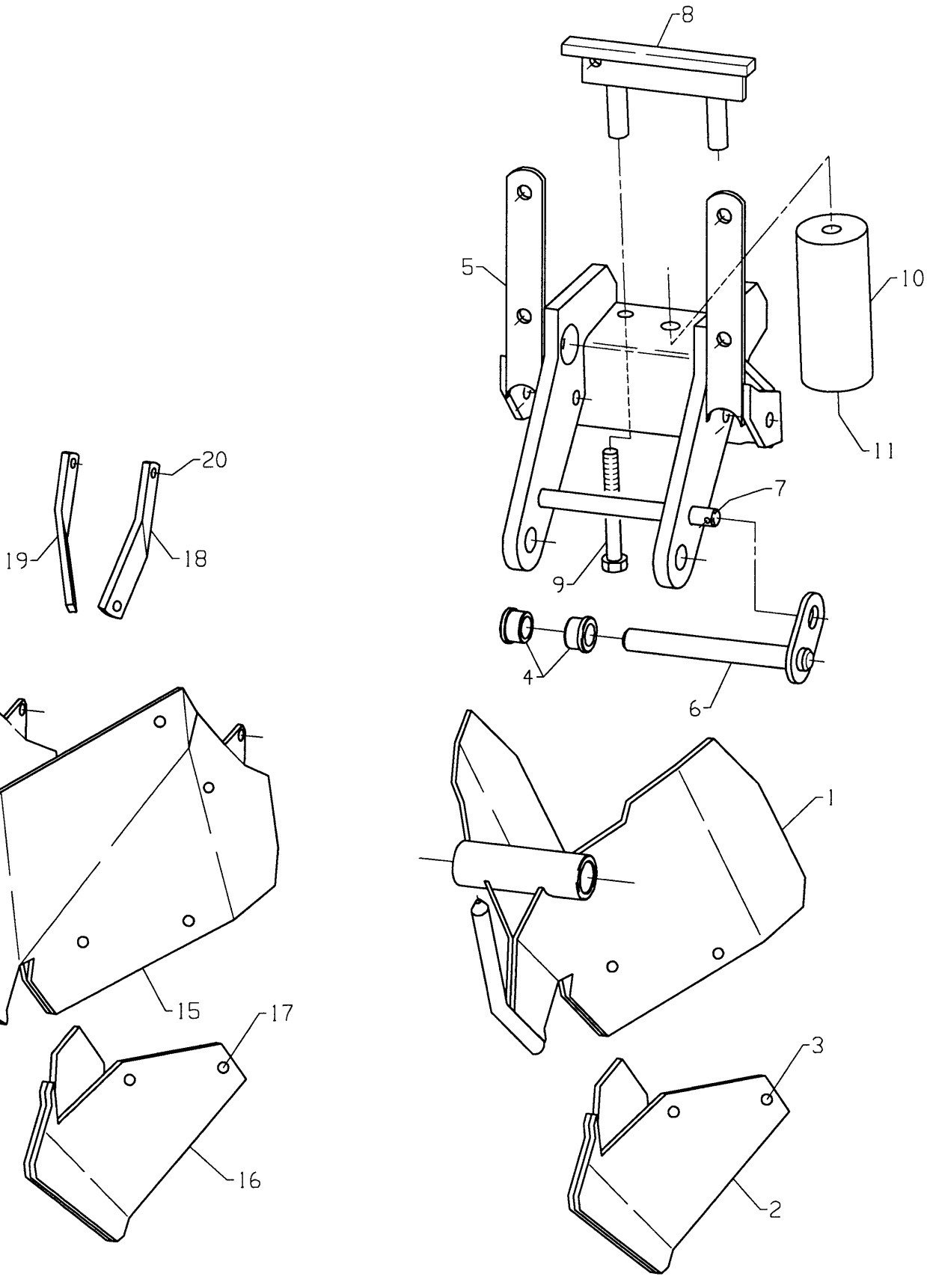

Fig. 30

Utgave: / Issue:	3	Redskap: / Implement:	POTETSETTER SLEPT 3200 POTATO PLANTER TRAILED 3200	Kverneland
Dato: / Date:	94-11	Enhet / Unit	SETTESKJÆR M/SJOKKABSORBER 3233 FURROW OPENER W/SHOCK ABSORBER 3233	Fig nr.: 30

Ref. No.	Delenr. Part no.	Ant. Qty.	Gjenstand	Description	Anmerkning Note
1-11	**218050**	**2**	**SETTESKJÆR HD M/SJOKKD. KPL**	**FURROW OPENER HD W/SH.ABS. ASS**	
1	218052	1	SETTESKJÆRKROPP HD M/SJ.D. SV.	FURROW OPENER BODY HD W/SH.ABS	
2	217626	1	SLITESPISS HD SV.	WEARING CHEST HD	
3	823525	4	PLOGSKRUE M10X25 8.8 ELZN.	PLOUGH BOLT M10X25 8.8 GALV.	
3	270448	4	BRIKKE Ø11-Ø30X4 GALV	WASHER Ø11-Ø30X4	
3	852160	4	NYLOCKMUTTER M10 ELZN.	NYLOCK NUT M10 GALV.	
4	410389	2	LAGERFORING Ø25X21-Ø35/16	BUSHING Ø25X21-Ø35/16	
5	218060	1	SKJÆROPPHENG HD SV.	SHARE SUSPENSION STAY	
6	218065	1	AKSEL Ø25 SV.	SHAFT Ø25	
7	865332	1	SPLINT 6.3X32 GALV.	SPLIT PIN 6,3 X 32	
8	218070	1	OPPHENGSFESTE SV.	SUSPENSION BRACKET	
9	813901	2	SEKSKANTSKRUE M16X110-8.8 ELZN	HEX. BOLT M16X110-8.8 GALV	
10	218075	1	FJØRELEMENT Ø80X170 PLAST	SPRING ELEMENT Ø80X170 PLASTIC	
11	814132	1	SEKSKANTSKRUE M20X220-8.8 ELZN	HEX. BOLT M20X220-8.8 ELZN	
11	852167	1	NYLOCKMUTTER M20 ELZN.	NYLOCK NUT M20 GALV	
15-20	**217641**	**1**	**FAST SETTESKJÆR HD KOMPL.**	**RIGID FURROW OPENER HD ASSY**	
15	217635	1	FAST SETTESKJÆRKROPP HD SV.	RIGID FURROW OPENER BODY HD	
16	217626	1	SLITESPISS HD SV.	WEARING CHEST HD	
17	823525	4	PLOGSKRUE M10X25 8.8 ELZN.	PLOUGH BOLT M10X25 8.8 GALV.	
17	270448	4	BRIKKE Ø11-Ø30X4 GALV	WASHER Ø11-Ø30X4	
17	852160	4	NYLOCKMUTTER M10 ELZN.	NYLOCK NUT M10 GALV.	
18	217642	1	LASK 32X8 Ø11/140/Ø11 V.	CLAMP	
19	217643	1	LASK 32X8 Ø11/140/Ø11 H.	CLAMP	
20	813530	4	SEKSKANTSKRUE M10X30-8.8 ELZN	HEX. BOLT M10X30-8.8 GALV.	
20	860160	4	BRIKKE Ø10.5-Ø21X2 ELZN	WASHER Ø10.5-Ø21X2	
20	852160	4	NYLOCKMUTTER M10 ELZN.	NYLOCK NUT M10 GALV.	

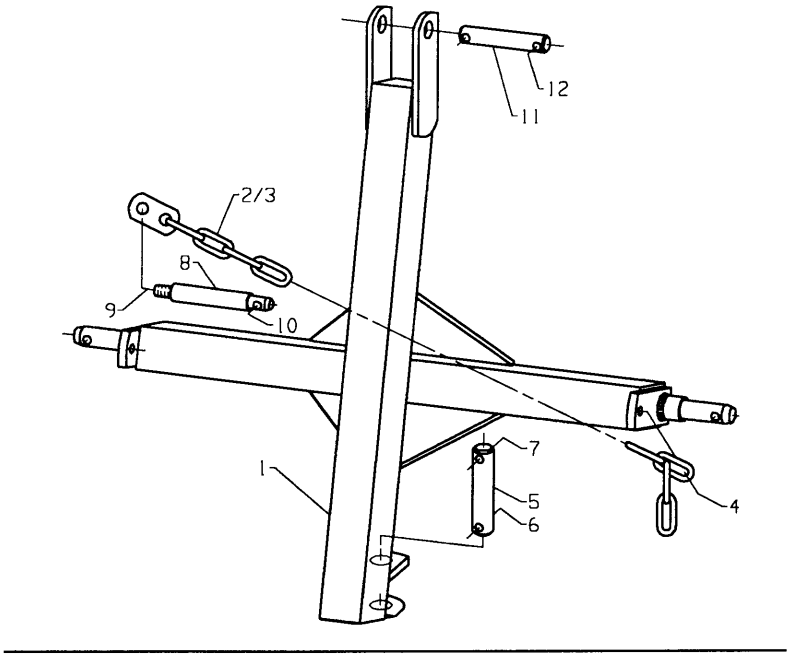
12
11
2/3
8
9
10
7
5
6
1
4

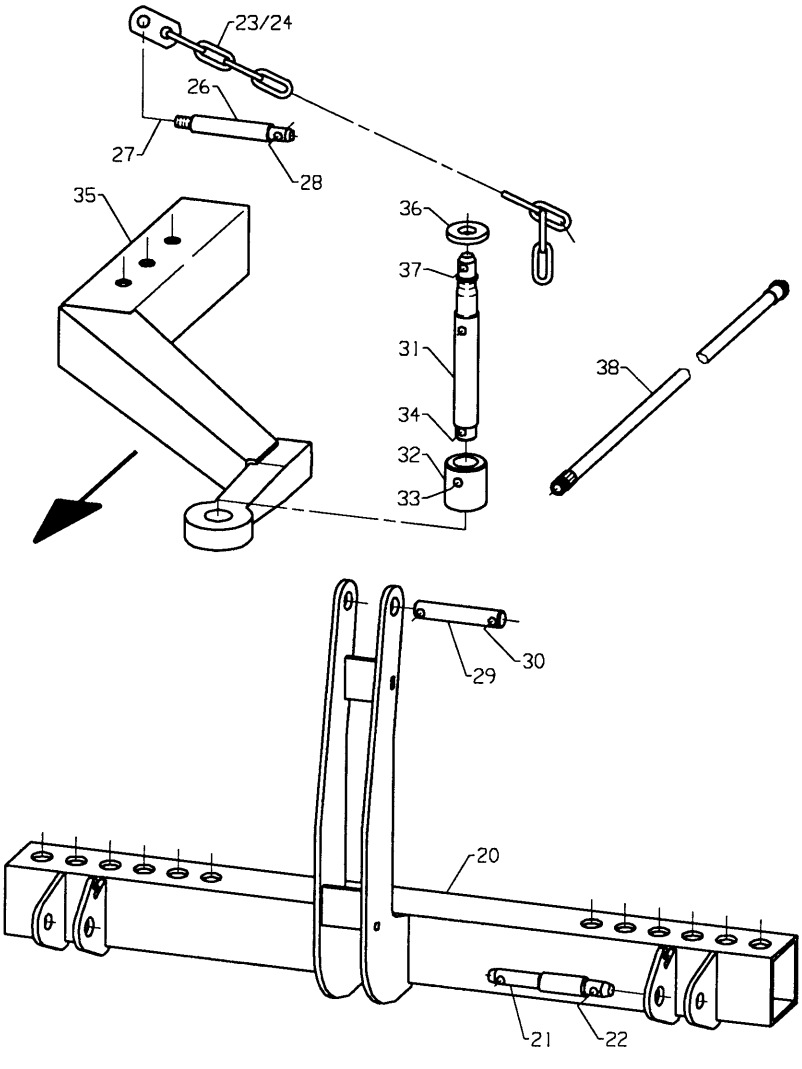
23/24
26
27
28
35
36
37
31
38
34
32
33
29
30
20
21
22

Fig. 31

Utgave: / Issue: 3	Redskap: / Implement: POTETSETTER SLEPT 3200 / POTATO PLANTER TRAILED 3200	Kverneland
Dato: / Date: 94-11	Enhet / Unit 3.PKT DRAG / THREE-POINT ATTACHED LINKAGE	Fig nr.: 31

Ref. No.	Delenr. Part no.	Ant. Qty.	Gjenstand	Description	Anmerkning Note
	3268		**TREKKRAMME**	**THREEPOINT LINKED DRAWBAR**	
1	217601	1	TREKKBOM SV.	LINKAGE	
2	219815	1	KJETTING SV. 17MM BOLTHOL	CHAIN FOR 17MM BOLT	
3	219816	1	KJETTING SV.20MM BOLTHOL	CHAIN FOR 20MM BOLT	
4	813645	2	SEKSKANTSKRUE M12X45-8.8 ELZN	HEX. BOLT M12X45-8.8 GALV	
4	860163	2	BRIKKE Ø13-Ø24X2.5 ELZN	WASHER Ø13-Ø24X2.5	
4	852162	2	NYLOCKMUTTER M12 ELZN.	NYLOCK NUT M12 GALV	
5	217271	1	BOLT Ø30-Ø12/100/Ø12	BOLT	
6	866650	1	SPENNHYLSE 12X50	TENSION PIN 12X50X2.5	
7	867061	1	RINGPINNE Ø12 (7/16") ELZN	RING PIN 12 (7/16") GALV.	
8	281329	1	TOPPBOLT Ø25X128	CONNECTION BOLT Ø25X128	
9	850166	1	SEKSKANTMUTTER M16-8 ELZN.	HEX. NUT M16 GALV	
10	867061	1	RINGPINNE Ø12 (7/16") ELZN	RING PIN 12 (7/16") GALV.	
11	219821	1	BOLT Ø25-Ø12/105/Ø12	DRAWBAR CONNECTION BOLT	
12	867061	2	RINGPINNE Ø12 (7/16") ELZN	RING PIN 12 (7/16") GALV.	
	3269		**OFFSET 3-PKT. DRAG**	**OFF-SET DRAWBAR**	
20	217720	1	TREKKBOM 3P OFF-SET SV.	LINKAGE 3-POINT OFF-SET	
21	228809	2	TREKKBOLT Ø22	PIN Ø22	
22	867061	2	RINGPINNE Ø12 (7/16") ELZN	RING PIN 12 (7/16") GALV.	
23	219815	1	KJETTING SV. 17MM BOLTHOL	CHAIN FOR 17MM BOLT	
24	219816	1	KJETTING SV.20MM BOLTHOL	CHAIN FOR 20MM BOLT	
25	867056	2	RINGPINNE Ø6 ELZN	RING PIN 6 GALV	
26	281329	1	TOPPBOLT Ø25X128	CONNECTION BOLT Ø25X128	
27	850166	1	SEKSKANTMUTTER M16-8 ELZN.	HEX. NUT M16 GALV	
28	867061	1	RINGPINNE Ø12 (7/16") ELZN	RING PIN 12 (7/16") GALV.	
29	219821	1	BOLT Ø25-Ø12/105/Ø12	DRAWBAR CONNECTION BOLT	
30	867061	2	RINGPINNE Ø12 (7/16") ELZN	RING PIN 12 (7/16") GALV.	
31-33	**217738**	**1**	**DRAGBOLT**	**BOLT**	
31	217738	1	DRAGBOLT	BOLT	
32	217739	1	HYLSE Ø35.5-Ø60X60 Ø13	COLLAR Ø35.5-Ø60X60 Ø13	
33	866660	1	SPENNHYLSE 12X60	TENSION PIN 12X60	
34	867061	1	RINGPINNE Ø12 (7/16") ELZN	RING PIN 12 (7/16") GALV.	
35	217730	1	DRAGARM OFF-SET SV.	ARM OFF-SET	
36	217740	1	BRIKKE Ø25.5-Ø60X8	WASHER Ø25.5-Ø60X8	
37	867061	1	RINGPINNE Ø12 (7/16") ELZN	RING PIN 12 (7/16") GALV.	
38	217745	3	HYD.SL.3/8" 1000 I06-UO8-0GR.	HYDR. HOSE 3/8" 1000	

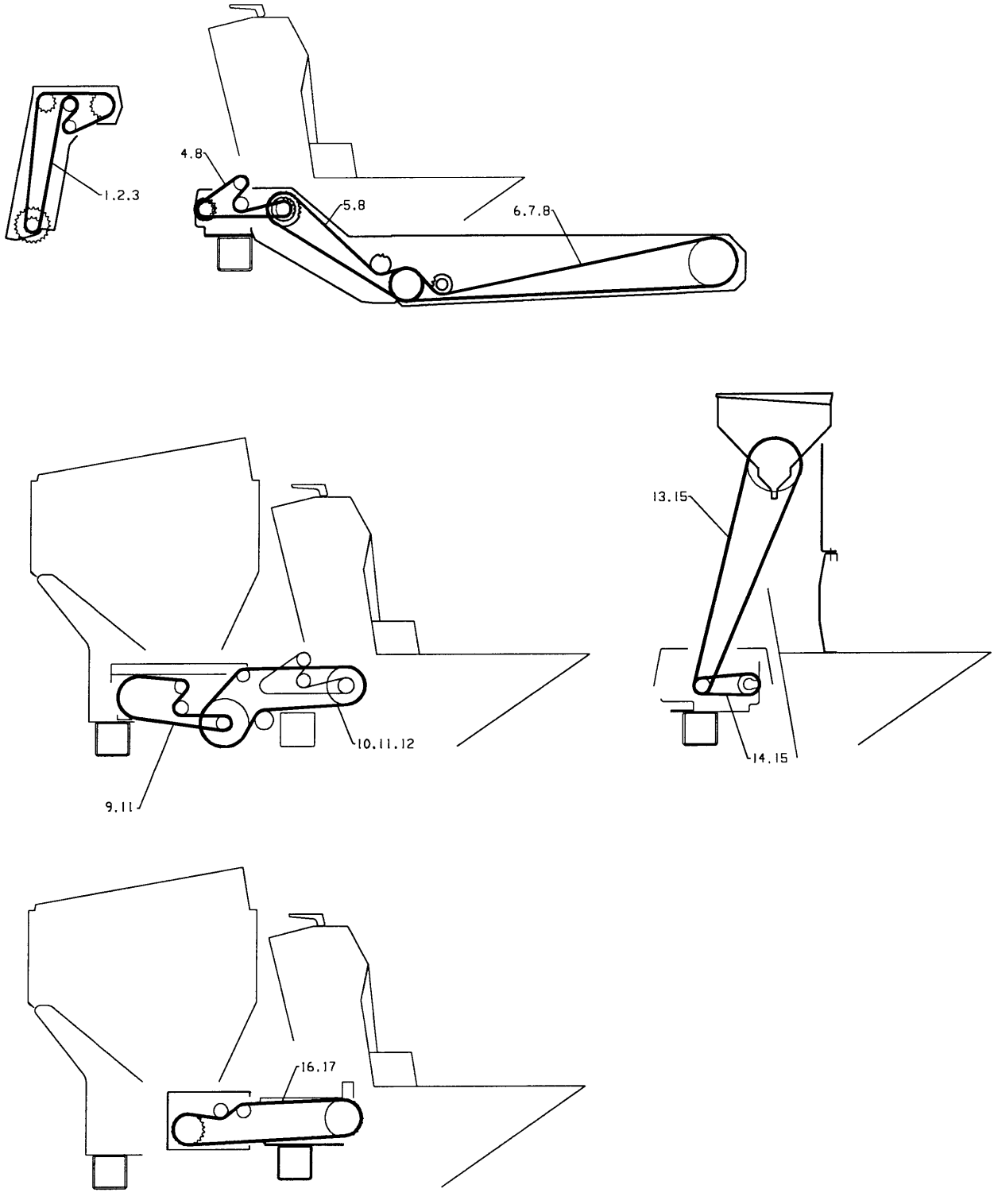

Fig. 32

Utgave: / Issue:	3	Redskap: / Implement:	POTETSETTER SLEPT 3200 POTATO PLANTER TRAILED 3200	Kverneland
Dato: / Date:	94-11	Enhet / Unit	KJEDER ROLLER CHAINS	Fig nr.: 32

Ref. No.	Delenr. Part no.	Ant. Qty.	Gjenstand	Description	Anmerkning Note
			TOPPAKSELDRIFT	**UPPER ROLLER DRIVE**	
1	901640	1	RULLEKJEDE 5/8"X1603	ROLLER CHAIN	
2	901643	1	RULLEKJEDE 5/8"X1667	CHAIN 5/8"X1667	
3	901602	1	RULLEKJEDELÅS 5/8"	CONNECTING LINK 5/8"	
			SETTETRANSMISJON	**MAIN DRIVE**	
4	901633	1	RULLEKJEDE 5/8"X905	ROLLER CHAIN 5/8"X905	
5	901640	1	RULLEKJEDE 5/8"X1603	ROLLER CHAIN	
6	901664	1	RULLEKJEDE 5/8"X2556	ROLLER CHAIN 5/8X2651	
7	901662	1	RULLEKJEDE 5/8"X1413	ROLLER CHAIN 5/8X1413	
8	901602	3	RULLEKJEDELÅS 5/8"	CONNECTING LINK 5/8"	
			GIRKASSE RADGJ. M/BELTEUTMATER	**GEAR BOX FOR FERT. ATT.,BELT T.**	
9	901630	1	RULLEKJEDE 5/8"X1064	CHAIN 5/8"X1064	
10	901635	1	RULLEKJEDE 5/8"X1286	CHAIN 5/8"X1286	
11	901602	2	RULLEKJEDELÅS 5/8"	CONNECTING LINK 5/8"	
12	901604	1	RULLEKJEDEHALVLEDD 5/8"X3/8"	HALF LINK 5/8"X3/8"	
			GRANULATSÅMASKIN	**GRANULE APPLICATOR**	
13	901495	1	RULLEKJEDE 1/2"X3/16"X1994	CHAIN 1/2"X3/16"X2007	
14	901438	1	RULLEKJEDE 1/2"X3/16"X521	ROLLER CHAIN 1/2"X3/16"X521	
15	901425	2	RULLEKJEDELÅS 1/2"X3/16"	CONNECTING LINK 1/2"X3/16"	
			RADGJØDSLER MED BELTEUTMATER	**FERT. HOPPER W/BELT FEEDER**	
16	901642	1	RULLEKJEDE 5/8"X1572	CHAIN 5/8"X1572	
17	901602	1	RULLEKJEDELÅS 5/8"	CONNECTING LINK 5/8"	

Numerisk deleregister/Numerical parts index

Delenr. Partno.	Fig/Ref Fig/Ref	Delenr. Partno.	Fig/Ref Fig/Ref	Delenr. Partno.	Fig/Ref Fig/Ref	Delenr. Partno.	Fig/Ref Fig/Ref	Delenr. Partno.	Fig/Ref Fig/Ref
205130	19/30b-39	215261	8/21	215888	14/67	216611	17/43	217367	10/7
205132	19/30b	215269	16/26	215890	17/29	216612	17/40	217368	10/8
205204	13/65-72	215271	8/22	215905	14/73	216613	17/41	217370	10/15
205208	13/65	215279	8/53	215910	14/110-112	217031	4/7	217371	10/21
205216	13/66	215280	8/52	215911	14/110	217065	7/1	217380	7/81
205230	13/68	215288	6/27	215913	14/111	217075	7/41	217385	22/56
205231	13/69	215292	6/1	215914	15/111	217083	7/2-31	217403	12/1a
205264	14/11a	215293	6/8a	215946	23/25	217084	7/2-31	217407	12/31
206267	19/30a-39	215294	6/8b	215948	23/28	217086	7/2	217410	12/36
206269	19/30a	215295	11/79	215955	14/112	217087	7/3	217416	12/32
206270	19/33-39	215296	8/71	216001	11/1	217114	7/29	217440	8/20-68
206272	19/34	215297	8/50	216002	11/2	217117	7/28	217442	8/32
206273	19/37	215298	8/49	216003	11/60	217118	7/28a	217444	8/60-65
206275	19/33	215300	6/8a-11	216004	11/61	217121	7/5	217445	8/62
206559	24/16	215301	6/8b-11	216009	11/3	217122	7/6	217447	8/67
214203	12/2	215303	2/43	216010	11/8	217127	7/16	217448	8/61
214226	12/22	215305	2/11	216011	11/10	217135	22/55	217449	8/58
214227	12/23	215306	2/11a	216013	11/20	217136	1/6	217451	26/3a
214229	12/39	215307	19/11	216014	11/15	217138	1/5	217452	26/7
214233	12/1	215311	2/39-41	216015	11/5	217142	1/5-19	217454	8/80-83
214240	12/6	215312	2/39	216016	11/2a	217145	1/11	217455	8/80
214241	12/7	215314	19/2	216018	11/25-34	217149	1/7	217459	9/27
214245	12/8	215319	19/2a	216019	11/25	217152	7/65	217460	9/28
215005	17/34	215320	19/1-18	216020	11/32	217154	7/64a	217465	9/29
215006	2/1b	215322	19/25a-39	216023	11/26	217155	7/64b	217467	9/32
215010	2/1a	215323	19/25b-39	216025	11/40	217166	7/70a	217495	9/1
215025	2/15	215325	19/1	216026	11/41	217167	7/70b	217501	8/84
215026	2/18	215331	19/4	216027	11/45-47	217170	7/61	217502	8/12
215032	2/26	215332	19/5	216028	11/45	217173	7/63	217503	8/13
215033	2/26a	215338	19/16	216031	11/73	217175	7/50	217505	8/74
215035	2/9	215341	19/25	216034	11/55	217177	7/51	217506	8/90
215049	2/16	215345	19/27a	216038	11/70	217180	7/43	217507	8/99
215058	2/33	215349	19/28	216039	11/68	217185	7/55	217508	8/100
215060	2/34	215351	19/47	216040	11/57	217187	7/52	217511	8/93
215062	5/25	215352	19/46	216041	11/59	217189	7/53	217512	8/94
215081	2/6	215353	19/27b	216043	11/62	217195	8/1	217513	8/95
215090	2/23-31	215456	12/8a	216045	11/74	217197	8/7	217518	9/10
215091	2/23	215460	12/6a	216046	11/77	217198	8/3	217519	9/11
215092	2/28	215461	12/7a	216051	21/1+2+3	217201	25/1-9	217521	9/2
215093	2/27	215464	12/24	216053	21/5-9	217202	25/1-9	217527	9/5
215096	2/50	215540	1/54-55	216055	21/5-9	217205	25/1	217528	14/79
215101	11/29	215541	1/54	216058	21/5	217206	25/2	217538	9/12
215102	6/3	215543	1/51	216062	21/6	217215	25/3	217540	9/22
215111	4/1	215544	1/52	216063	21/13	217216	25/4	217542	9/24
215112	4/1a	215635	2/2-5	216064	21/7	217225	25/6	217545	9/15
215114	4/4	215636	2/2	216066	21/2	217226	25/7	217546	9/16
215116	4/5	215645	2/3	216067	21/8	217228	25/7a	217551	13/18a
215120	2/32	215646	2/4	216068	28/6	217250	1/1-39	217552	13/18b
215125	2/20	215649	2/4a	216071	21/18	217251	1/1	217559	13/19
215130	2/19-21	215671	25/22	216072	21/17	217255	1/2	217560	13/24a
215131	2/19	215770	20/17	216076	21/10	217260	1/15	217561	13/24b
215141	4/2	215772	20/14	216077	21/22	217265	1/21	217570	13/1-3
215148	6/2	215775	20/1	216082	21/5-18	217270	1/22	217571	13/1
215149	6/9a	215778	20/2	216084	21/5-18	217271	1/23	217574	13/2
215150	6/9b	215783	20/4	216088	21/21	217273	1/25	217577	13/54
215151	3/1	215790	20/12	216093	28/4	217280	1/32	217579	13/9
215154	3/6	215795	20/8	216094	28/10	217283	1/3	217583	13/4
215156	3/2	215796	20/9	216097	28/8	217295	1/27	217585	13/1-13
215158	3/4	215806	14/22a	216098	28/9	217296	1/34	217587	13/18a-29
215175	5/7	215807	14/70	216115	29/3	217301	7/76	217588	13/18b-29
215180	5/9	215808	14/22b	216116	29/4	217302	7/77	217590	13/26
215181	15/122	215809	14/61	216121	29/5	217316	10/1-16	217594	13/51
215185	5/14	215814	14/44	216122	29/6	217320	10/1	217601	31/1
215190	5/1	215853	17/44	216126	29/7	217321	10/2	217620	26/4-6
215193	5/2	215857	14/38	216145	28/1	217338	10/3	217621	26/4-6
215198	12/34	215866	14/39	216146	28/2	217340	10/4	217622	26/4
215199	19/7	215867	14/27	216147	28/11	217351	10/27	217624	26/6
215235	12/37	215868	14/30	216493	6/28	217352	10/28	217626	30/16
215240	12/2a	215869	14/32	216494	6/29	217353	10/29	217635	30/15
215241	12/4	215875	14/33	216495	6/31	217355	10/32	217641	30/15-20
215253	8/20	215876	14/41	216508	17/40-44	217358	10/35	217642	30/18
215255	14/65a-65c	215878	14/43	216509	17/41-44	217359	10/36	217643	30/19
215256	14/65a	215879	14/46	216568	17/1	217361	10/23	217652	22/28
215257	6/24	215880	14/48	216572	17/31	217362	10/26	217655	23/10
215258	16/18	215881	14/49	216580	17/45	217364	10/34	217663	23/34
215260	16/27	215882	14/50	216610	17/42	217366	10/9	217665	23/13

Numerisk deleregister/Numerical parts index

Delenr. Partno.	Fig/Ref Fig/Ref
217670	23/7
217675	1/40
217676	1/42
217680	23/1
217681	23/2
217686	23/30
217690	23/5
217720	31/20
217730	31/35
217738	31/31
217739	31/32
217740	31/36
217745	31/38
217803	14/7
217804	14/8
217810	14/29
217811	14/35
217812	14/35a
2178121	15/44
217815	14/1
217819	14/2
217822	14/12
217823	14/13
217824	14/17
217825	14/18
217826	14/20
217852	14/9
217853	14/10
217855	14/24
217856	14/26
217857	15/34
217865	14/4
217870	14/82-84
217871	14/82
217884	14/58
217885	14/53
217886	14/86
217892	14/51
217893	14/55
217894	14/11
217896	14/68
217907	15/126-130
217908	14/87
217909	14/88
217910	14/89
217915	18/26-29
217916	18/26
217922	18/22
217925	18/11-14
217926	18/12
217927	18/11
217928	18/14a
217929	18/14d
217930	18/14g
217933	18/1
217941	18/30
217944	18/15-25
217946	18/17
217949	18/18
217957	18/6
217969	24/35-45
217970	24/1a-34
217971	24/1b-34
217974	24/9
217980	24/1a
217981	24/1b
217988	24/10
217990	22/50
217992	24/23
217995	24/39
217996	24/40
217998	24/42
218000	7/66-70
218001	7/66-70
218003	7/66
218005	7/69
218007	7/67
218008	7/70c
218010	22/17
218011	24/35
218012	24/36
218013	22/18
218014	22/20
218018	22/25
218019	22/29
218022	22/1a-15
218023	22/1b-15
218025	22/9
218030	22/1
218032	22/2
218033	22/3
218035	22/12-14
218036	22/12
218037	22/13
218039	22/10
218042	22/49
218050	30/1-11
218052	30/1
218060	30/5
218065	30/6
218070	30/8
218075	30/10
218090	18/2
218091	18/3
218097	18/4
218098	18/10a
218103	15/7
218104	15/8
218106	15/81
218107	15/82
218109	15/83
218112	18/15
218115	15/109
218122	15/14a
218123	15/14b
218124	15/18a
218125	15/18b
218128	15/120
218130	15/1
218140	15/61
218141	15/98
218145	15/62
218147	15/65
218150	15/60-78
218153	15/69
218155	15/60
218162	15/73
218163	15/75
218164	15/76
218165	15/97
218170	15/89
218171	15/90
218173	15/91
218178	15/92
218179	15/94
218186	16/1
218190	16/2
218195	16/38
218196	16/23a
218203	16/51
218204	16/56
218205	16/57
218206	16/50
218210	15/78
218215	16/47
218216	16/23
218220	16/11
218222	16/16
218224	16/3
218230	16/35
218231	16/32
218232	16/33
218233	16/28
218240	15/104-106
218241	15/102
218242	15/104
218244	15/101
218245	15/100
218247	15/105
218604	13/11
218617	13/10
219172	7/21
219173	7/20
219175	7/22
219178	7/15
219179	7/18
219181	7/14
219182	7/9
219183	7/11
219250	2/29
219321	9/7
219342	9/13
219570	10/12
219572	10/13
219622	1/13
219658	1/16
219668	27/2
219669	1/57
219760	26/1-3
219761	26/1-3
219762	26/1
219763	26/2
219764	26/3
219815	31/2
219816	31/24
219821	31/11
221316	2/35
221411	13/57
221519	16/41
222599	2/7
222621	2/25
222628	2/24
222640	2/37
222667	5/5
222676	5/4
222726	14/65b
222821	3/8
222822	3/5a
222823	3/5b
222825	3/8
223171	13/23
223172	13/8
223174	12/22a
223175	12/23a
223190	12/26
223494	12/3
223569	17/17
223570	17/16
223577	17/2
223581	17/12
223582	17/14
223583	17/8
223898	16/48
224052	17/3
224053	17/4
224054	17/6
228241	13/34
228660	20/20-30
228661	20/20
228662	20/29
228809	31/21
229219	5/8
231231	8/66
231405	20/21
231499	5/3
231500	11/56
240140	19/19-21
240141	19/21
240150	19/20
240151	19/19
241341	2/13
241438	2/52
243077	16/39
255579	6/17
255889	23/26
256310	24/4
256571	14/74
257051	23/10a
257053	23/10c
257772	22/48
258642	24/7
258643	22/4
259182	6/18
259345	1/41
270187	11/46
270437	13/40-49
270441	13/42
270442	13/43
270447	13/40
270448	11/22
270450	13/41
270453	13/44
271248	24/24-34
271250	12/12
271252	12/13-21
271253	12/13a
271254	12/14
271255	12/15
281329	31/26
281415	18/8
281633	16/8
288007	13/38
288203	18/7
288776	12/29
288796	13/35
288799	13/34-39
288812	13/37
288814	23/3
288821	12/27
288844	13/36
300336	19/15
300666	18/10b
300852	1/35
300875	22/44
300885	22/45
300953	24/14
300957	23/17
300966	23/18
300996	1/58
301267	1/30
301274	1/37-39
301275	1/37
301276	1/38
301759	8/101
302048	24/6
302234	21/3
302428	11/31
303708	15/106a
306251	14/102
306287	14/100
307741	22/33b
310089	24/13
310098	26/5
310912	8/64
311542	8/4
311745	14/66
311983	8/10
314815	29/1
314816	29/2
401044	7/26
401045	7/27
402556	8/36
403210	29/10
403534	15/112
403823	13/22
410334	12/11
410389	30/4
410443	18/19
410493	1/50
410521	25/19
410525	25/11
410526	25/12
410723	1/62
410724	22/21
410746	22/27
410747	1/56
410748	22/26
410754	1/60
410755	1/61
410783	27/1
410784	22/19
411123	23/16
411722	19/9
411883	27/15
411884	22/33a
411885	24/38
411903	25/14-23
411904	25/14
411905	25/15
411906	25/16
411907	25/17
411908	25/18
411910	25/20
411911	25/21
411914	25/11-13
411916	25/13
412059	27/6
412088	20/10
412201	29/4a
412202	29/4b
412203	29/3a
412501	20/30
412512	18/14c
700029	8/60
700081	8/60c
700089	8/60g
700095	8/60f
700107	8/60i
700126	8/60d
700128	8/60e
700334	8/60a
700335	8/60b
703151	25/9
703152	25/10
810548	13/58
810550	23/9
810602	19/17
810703	19/49
813320	2/51
813416	1/18
813420	1/53
813425	10/20
813430	15/86
813440	14/47
813445	22/14
813450	2/14
813455	15/106
813460	13/55
813470	24/43
813520	10/11
813525	1/28
813530	10/10
813535	14/74
813540	16/37
813545	15/68
813550	22/15
813560	18/25
813580	13/27
813600	1/26
813601	8/6

Numerisk deleregister/Numerical parts index

Delenr. Partno.	Fig/Ref Fig/Ref	Delenr. Partno.	Fig/Ref Fig/Ref	Delenr. Partno.	Fig/Ref Fig/Ref	Delenr. Partno.	Fig/Ref Fig/Ref	Delenr. Partno.	Fig/Ref Fig/Ref
813620	2/22a	852156	14/101	871307	20/22				
813625	12/25a	852158	1/53	871822	19/39				
813630	14/11	852160	1/26	871827	18/14b				
813635	15/12	852162	12/25	871875	17/11				
813640	12/25	852166	12/20	872010	23/10b				
813645	31/4	852167	14/3	872016	24/41				
813650	14/65c	855378	5/3	873540	12/21				
813660	13/20	855380	14/74	901425	11/34				
813680	18/10	860150	21/16	901438	11/35				
813690	24/11	860155	14/40	901495	11/51				
813700	6/20	860156	14/101	901602	14/64				
813705	11/80	860158	1/17	901604	16/55				
813706	7/45	860160	1/28	901630	16/24				
813830	13/3	860163	11/80	901633	32/4				
813840	20/6	860164	14/90	901635	16/53				
813845	24/3	860166	13/53	901640	32/1				
813850	12/10	860170	13/31	901642	14/63				
813860	13/53	860175	1/36	901643	32/2				
813880	24/15	862058	14/28	901662	32/7				
813890	24/8	862063	3/7	901664	32/6				
813901	30/9	865170	11/9	911270	8/91				
813905	17/35	865225	14/56	911301	14/4a				
813906	18/24	865250	25/23						
813908	7/40	865270	13/13						
814060	15/2	865325	16/43						
814130	14/3	865332	17/5						
814132	30/11	866220	15/96						
821316	21/12	866305	15/93						
821416	10/24	866330	23/31						
821420	10/22	866336	1/55						
821425	10/25	866430	7/17						
821430	2/38	866436	8/37						
821470	22/35	866440	15/99						
821520	11/16	866455	15/63						
821525	14/90	866536	12/9a						
821530	11/21	866540	12/9						
821535	2/36	866650	1/12						
821560	13/49	866650g	15/119						
821570	7/31	866660	31/33						
821690	17/30	867013	19/18						
821706	8/73	867014	1/10						
823522	17/15	867056	1/31						
823525	12/28	867061	1/24						
823530	13/47	867081	16/4						
823590	13/45	867086	12/38						
825216	17/13	867091	12/33						
827220	8/30	868420	12/19						
827225	15/84	868425	19/32b						
827625	22/16	868430	14/23						
831512	11/11	868435	6/5						
831516	8/65a	868445	1/39						
831612	14/54	868450	7/12						
831616	11/33	868580	8/60h						
831716	7/62	868590	7/7						
837220	21/15	868604	12/18						
837266	29/11	868605	19/31b						
837270	19/10	868610	7/13						
837308	11/47	868712	16/19						
837616	14/40	868842	17/10						
839316	3/3	869854	20/28						
839325	14/101	869855	18/14f						
839416	10/14	869879	20/27						
839420	2/31	869880	18/14e						
839525	19/3	870173	15/67						
839864	15/74	870625	19/38						
841013	14/52	870632	2/30						
841014	15/77	870637	6/4						
850154	21/16	870718	11/58						
850155	19/10	870720	12/16						
850156	2/51	870725	20/23						
850158	12/40	870727	11/28						
850160	11/16	870732	7/58						
850161	15/71	870750	7/10						
850162	13/39	870822	16/6						
850166	1/36	870905	17/9						
850170	18/14	871254	12/17						