Spare parts list
Six row potato planters
Kverneland Underhaug 3300

UH121471

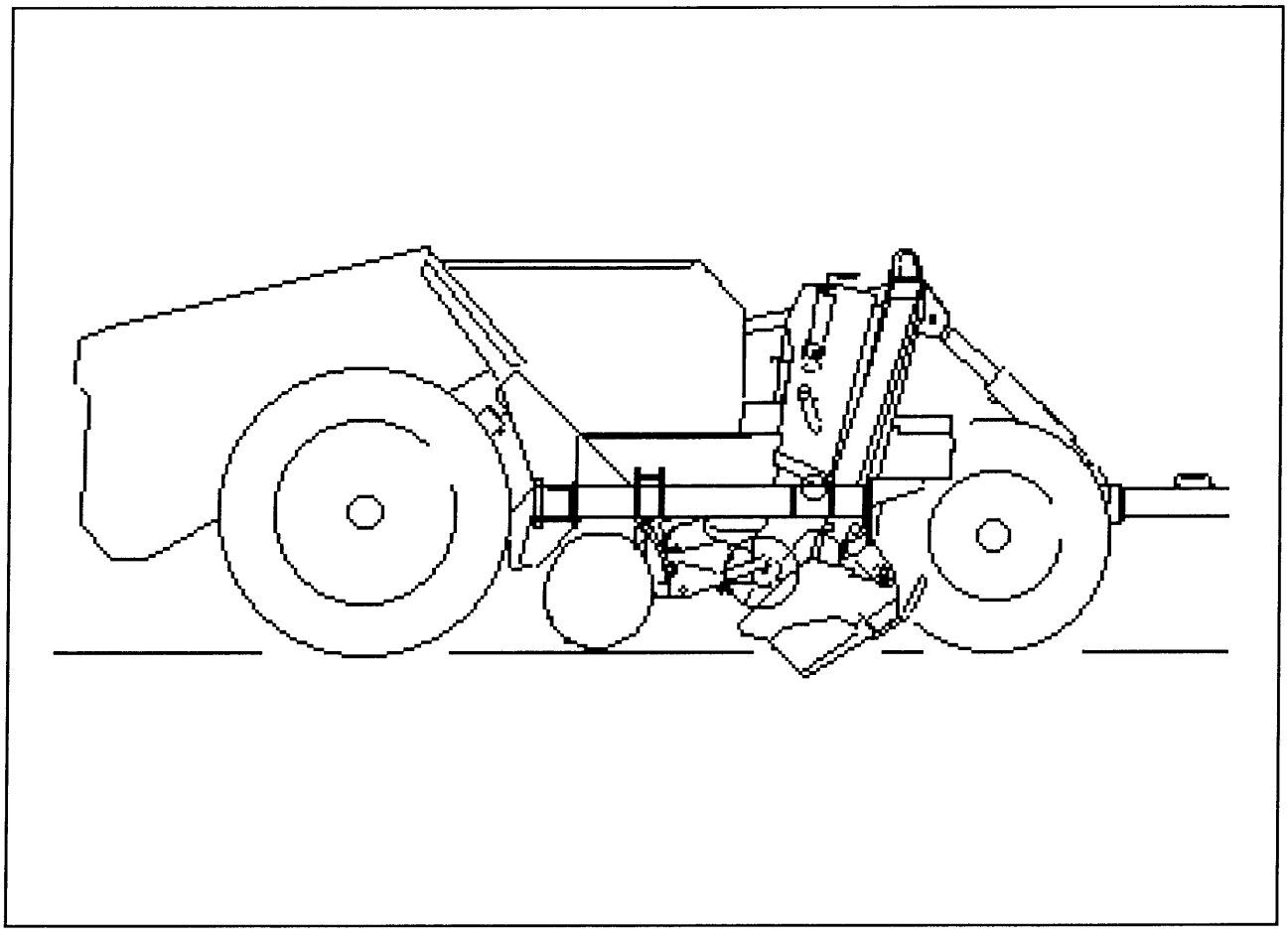

Spare parts catalogue
Six row trailed potato planters
model 3300
Reservedelsliste
Seks rads slept potetsettere
modell 3300

⚠ Important!

All references to right and left hand side apply to the view of the machine when standing behind and facing the direction of travel.

Please note the following when ordering spare parts:

It should always be referred to serial number. This is found on the machine's identification plate.
The spare part's catalogue number and description should be used.
The reference number is used only to help identifying the spare part on the illustration.

The arrow on the illustration shows the direction of travel

⚠ Viktig!

Alle referanser til retningene høgre og venstre henviser til delenes posisjon når en står bak maskinen og ser i farts-retningen.

Ved bestilling av deler må en merke seg følgende:

Oppgi alltid maskinens serienummer. Dette står på identifikasjonsskiltet på maskinen.
Delens nummer (6 siffer) og navn må oppgis.
Referansenummeret brukes bare for å sammenholde deletegning og betegnelse i lista; og skal derfor ikke oppgis.

Pilen på illustrasjonen viser maskinens kjøreretning.

Supplied by:

kverneland group

Kverneland Nærbø AS
Torlandsvegen 3,
N-4365 Nærbø,
Norway

Content

Innhold

		Fig.	Page/Side
Drawbar	Drag	1	2
Main frame	Ramme	2	4
Planting unit	Setteenhet	3	6
Choke plates	Strupeolater	4	10
Cup belts	Koppebelter	5	12
Gear boxes	Girkasser	6	14
Primary drives	Primærdrift	7	18
Secondary drives	Sekunndærdrift	8	22
Agitator drives	Skakedrivverk	9&10	26
Drive wheels	Drivhjul	11	30
Hopper	Tank	12&13	32
Land wheel	Bærehjul	14	38
Hydraulics	Hydraulikkanlegg	15	40
Track markers	Spormarkører	16&17	42
Road transporting wheel	Transporthjul	18	46
Inpact furrow openers	Setteskjær m/sjokkdemper	19	48
Disc coverers	Rulleskjær	20	50
Area and speed meter	Areral-og hastighetsmåler	21	52
Planting monitor	Settekontroll	22	54
Drivkjeder	Drive roller chains	23	56

Numerical parts index ..... Numerisk deleregister 86

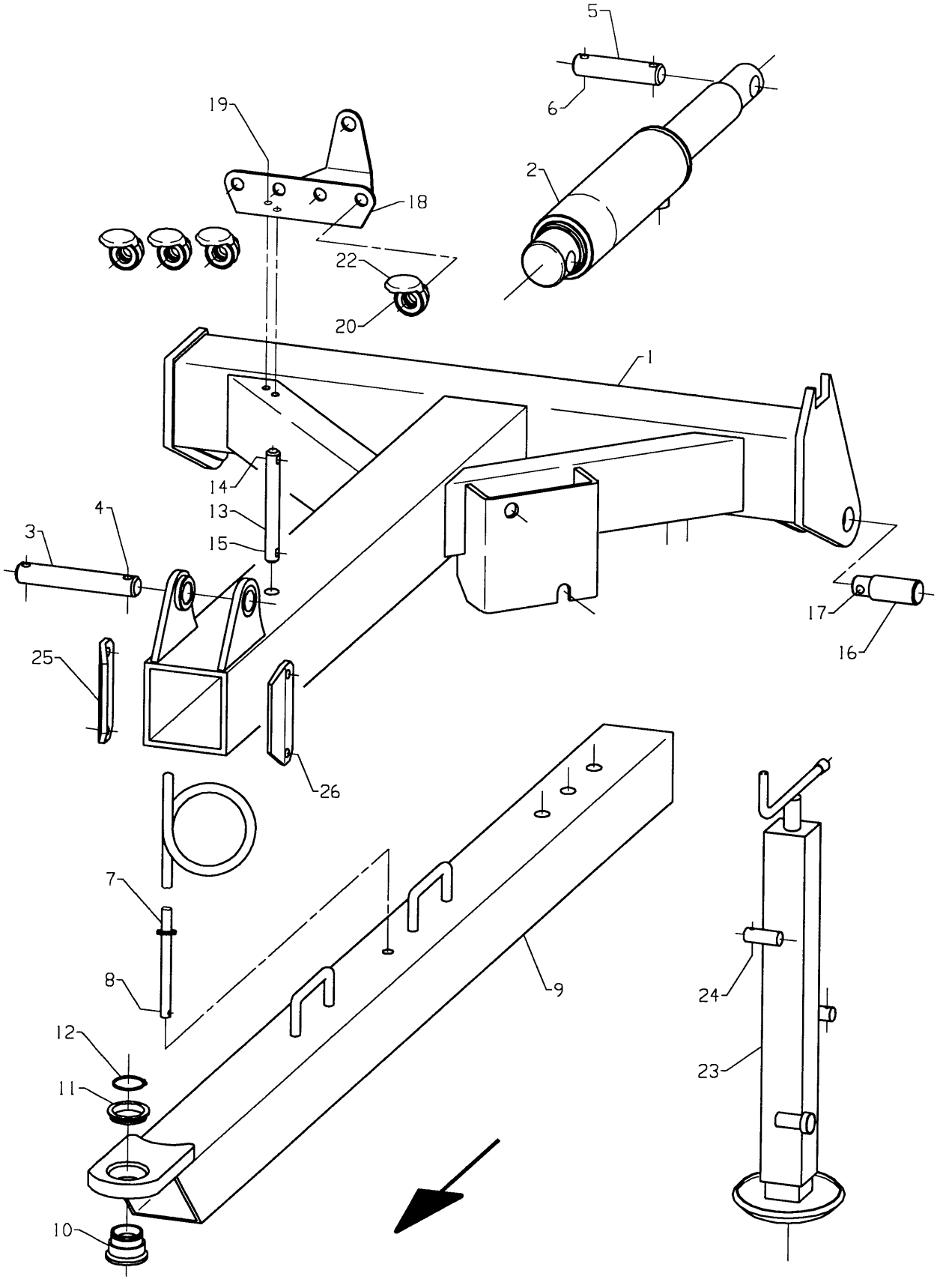

Fig. 1

Utgave: / Issue:	1	Redskap: / Implement:	POTETSETTER SLEPT 6-RADS / POTATO PLANTER TRAILED 6-ROWS	3300 / 3300	Kverneland
Dato: / Date:	95-03	Enhet / Unit	DRAG / DRAWBAR		Fig nr.: 1

Ref. No.	Delenr. Part no.	Ant. Qty.	Gjenstand	Description	Anmerkning Note
1	213951	1	DRAGBOM SV.	DRAWBAR	
2	213958	1	SYLINDER Ø80 DRAG SV.	CYLINDER Ø80 DRAWBAR	
*	217141	1	SYLINDERPAKNINGSSETT Ø80/Ø80	CYLINDER SEAL KIT Ø80/Ø80	
3	214434	1	BOLT ø30-ø12/125/ø12	BOLT Ø30-Ø12/125/12	
4	867061	2	RINGPINNE Ø12 (7/16") ELZN	RING PIN 12 (7/16") GALV.	
5	217271	1	BOLT Ø30-Ø12/100/Ø12	BOLT	
6	867061	2	RINGPINNE Ø12 (7/16") ELZN	RING PIN 12 (7/16") GALV.	
7	213964	1	SLANGEHENGER SV.	HOSE HOLDER	
8	867053	1	RINGPINNE Ø5 ELZN	LINCH PIN Ø5	
9	213954	1	DRAGARM SV.	DRAWBAR ARM	
10-12	**301274**	**1**	**DRAGØYEFORING KOMPL.**	**YOKE BUSHING ASSY**	
10	301275	1	FORING	BUSHING	
11	301276	1	RING	RING	
12	868445	1	LÅSERING UTV. A45X1.75	CIRCLIP A45X1.75	
13	217283	1	BOLT Ø20-Ø12/134/Ø12	BOLT	
14	866645	1	SPENNHYLSE 12X45	LOCK PIN 12X45	
15	867061	1	RINGPINNE Ø12 (7/16") ELZN	RING PIN 12 (7/16") GALV.	
16	217280	2	TREKKBOLT KAT 2 Ø28-Ø35	DRAW BOLT	
17	867061	2	RINGPINNE Ø12 (7/16") ELZN	RING PIN 12 (7/16") GALV.	
18	214117	1	SLANGEPARKERING	HOSE PARKING	
19	813525	2	SEKSKANTSKRUE M10X25-8.8 ELZN	HEX. BOLT M10X25-8.8 GALV.	
19	860160	2	BRIKKE Ø10.5-Ø21X2 ELZN	WASHER Ø10.5-Ø21X2	
19	852160	2	NYLOCKMUTTER M10 ELZN.	NYLOCK NUT M10 GALV.	
20	217675	4	SLANGEPARKERINGSHOLDER	HOLDER	
21	259345	4	BRIKKE Ø18.5-Ø34.5X1.25	WASHER Ø18.5-Ø34.5X1.25	
22	217676	4	SLANGEPARKERINGSLOKK	COVER	
23	301267	1	FOT KOMPL. SV.	PARKING LEG ASSY	
24	867056	1	RINGPINNE Ø6 ELZN	RING PIN 6 GALV	
25	213967	2	LASK 53X8-13/101/13	CLAMP 53X8-13/101/13	
26	813706	2	SEKSKANTSKRUE M12X160-8.8 ELZN	HEX. BOLT M12X160-8.8	
26	860163	2	BRIKKE Ø13-Ø24X2.5 ELZN	WASHER Ø13-Ø24X2.5	
26	852162	2	NYLOCKMUTTER M12 ELZN.	NYLOCK NUT M12 GALV	

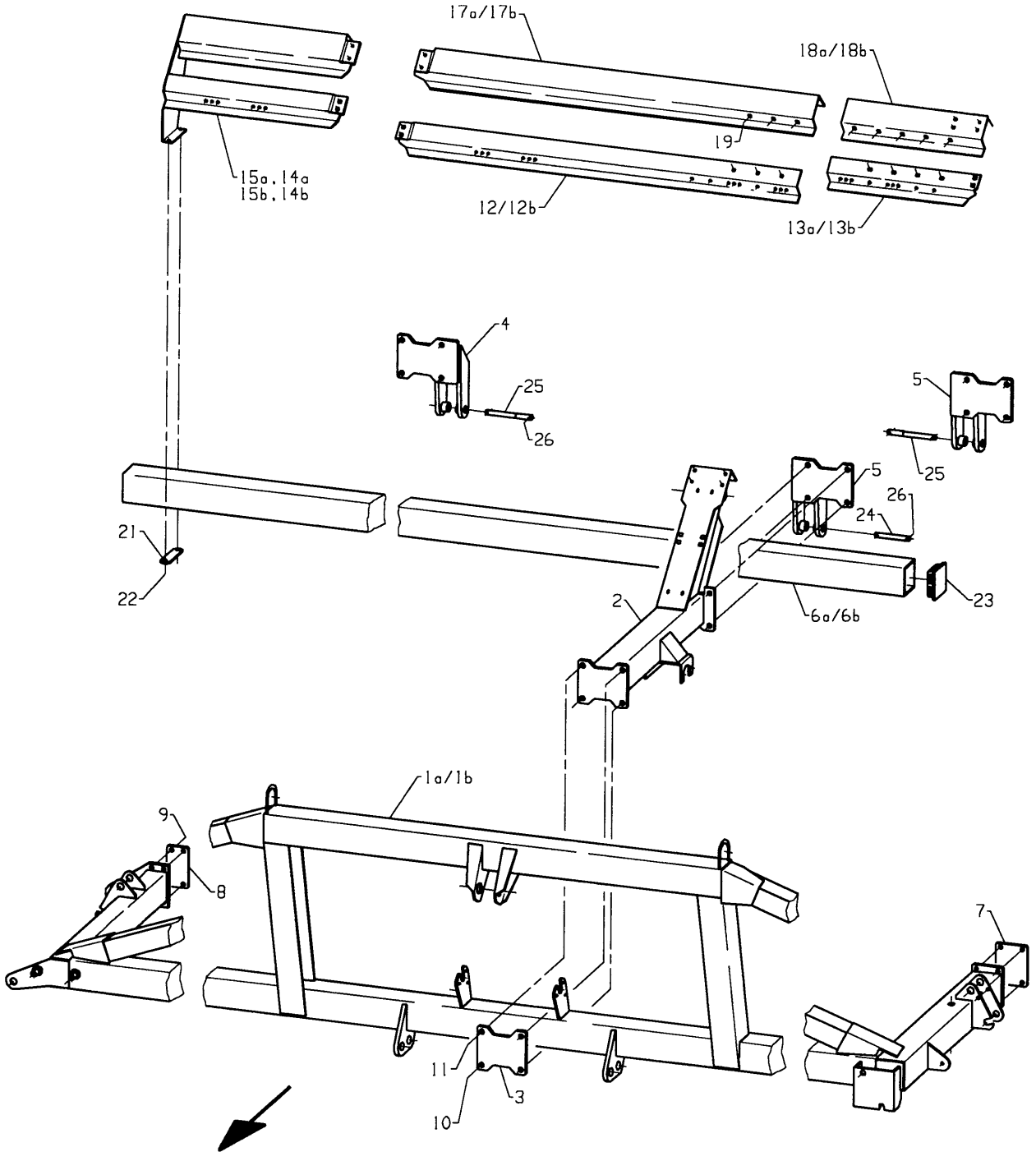
17a/17b
18a/18b
19
15a,14a
15b,14b
12/12b
13a/13b
4
25
26
5
25
5
26
24
21
22
2
6a/6b
23
1a/1b
9
8
7
11
3
10

Fig. 2

Utgave: / Issue:	1	Redskap: / Implement:	POTETSETTER SLEPT 6-RADS / POTATO PLANTER TRAILED 6-ROWS	3300 / 3300	Kverneland
Dato: / Date:	95-03	Enhet / Unit	RAMME / FRAME		Fig nr.: 2

Ref. No.	Delenr. Part no.	Ant. Qty.	Gjenstand	Description	Anmerkning Note
1a	214121	1	RAMME SV.	FRAME	3336-3340
1b	214131	1	RAMME SV.	FRAME	3375-3385
2	214180	3	BÆREARM SV.	ARM	
3	214183	3	KLEMPLATE FRAM	CLAMP FRONT	
4	214300	2	BRAKETT SV. V.	BRACKET LH	
5	214301	1	BRAKETT SV. H.	BRACKET RH	
6a	214128	1	BOM BAK	REAR BAR	3336-3340
6b	214138	1	BOM BAK	REAR BAR	3375-3385
7	214169	1	KLEMMPLATE Ø17-121-73	CLAMP Ø17-121-73	
8	214170	1	KLEMMPLATE Ø17-121-33	CLAMP Ø17-121-33	
9	813905	8	SEKSKANTSKRUE M16X150-8.8 ELZN	HEX. BOLT M16X150-8.8	
9	860166	8	BRIKKE Ø17-Ø30X3 ELZN	WASHER Ø17-Ø30X3	
10	814132	2	SEKSKANTSKRUE M20X220-8.8 ELZN	HEX. BOLT M20X220-8.8	
10	860170	4	BRIKKE Ø21-Ø37X3 ELZN	WASHER Ø21-Ø37X3	
10	852167	2	NYLOCKMUTTER M20 ELZN.	NYLOCK NUT M20 GALV	
11	814130	22	SEKSKANTSKRUE M20X180-8.8 ELZN	HEX. BOLT M20X180-8.8 GALV	
11	860170	44	BRIKKE Ø21-Ø37X3 ELZN	WASHER Ø21-Ø37X3	
11	852167	22	NYLOCKMUTTER M20 ELZN.	NYLOCK NUT M20 GALV	
12a	214023	2	TVERRSKINNE LANG	TRANSVERSE RAIL LONG	3336-3340
13a	214024	2	TVERRSKINNE KORT	TRANSVERSE RAIL SHORT	"
12b	214705	2	TVERRSKINNE LANG	TRANSVERSE RAIL LONG	3375-3385
13b	214706	2	TVERRSKINNE KORT	TRANSVERSE RAIL SHORT	"
14a	214288	1	TVERRPLATE SV. V.	TRANSVERSE PLATE LH	3336-3340
15a	214287	1	TVERRPLATE SV. H.	TRANSVERSE PLATE RH	
14b	214709	1	TVERRPLATE SV. V.	TRANSVERSE PLATE LH	3375-3385
15b	214708	1	TVERRPLATE SV. H.	TRANSVERSE PLATE RH	"
16	821630	16	LÅSESKRUE M12X30-8.8 ELZN.	CARRIAGE BOLT M12X30-4.6	
16	860163	16	BRIKKE Ø13-Ø24X2.5 ELZN	WASHER Ø13-Ø24X2.5	
16	852162	16	NYLOCKMUTTER M12 ELZN.	NYLOCK NUT M12 GALV	
17a	214281	2	TVERRPROFIL LANG	TRANSVERSE PROFILE LONG	3336-3340
18a	214282	2	TVERRPROFIL KORT	TRANSVERSE PROFILE SHORT	"
17b	214703	2	TVERRPROFIL LANG	TRANSVERSE PROFILE LONG	3375-3385
18b	214704	2	TVERRPROFIL KORT	TRANSVERSE PROFILE SHORT	"
19	821630	8	LÅSESKRUE M12X30-8.8 ELZN.	CARRIAGE BOLT M12X30-4.6	
19	860163	8	BRIKKE Ø13-Ø24X2.5 ELZN	WASHER Ø13-Ø24X2.5	
19	852162	8	NYLOCKMUTTER M12 ELZN.	NYLOCK NUT M12 GALV	
20	813640	24	SEKSKANTSKRUE M12X40-8.8 ELZN	HEX. BOLT M12X40-8.8 GALV	
20	860160	24	BRIKKE Ø10.5-Ø21X2 ELZN	WASHER Ø10.5-Ø21X2	
20	852160	24	NYLOCKMUTTER M10 ELZN.	NYLOCK NUT M10 GALV.	
21	215295	2	LASK 40X8-Ø13/133/Ø13	CLAMP 40X8-Ø13/133/Ø13	
22	813705	4	SEKSKANTSKRUE M12X150-8.8 ELZN	HEX. BOLT M12X150-8.8	
22	860163	8	BRIKKE Ø13-Ø24X2.5 ELZN	WASHER Ø13-Ø24X2.5	
22	852162	4	NYLOCKMUTTER M12 ELZN.	NYLOCK NUT M12 GALV	
23	911301	2	ENDEPLUGG 120X120X6(5)	PLUG	
24	214629	1	BOLT Ø20-Ø8.4/114/Ø8.4	BOLT Ø20-Ø8.4/114/Ø8.4	
25	214626	2	BOLT Ø22-Ø8.4/205/Ø12	BOLT Ø22-Ø8.4/205/Ø12	
26	865440	4	SPLINT 8X40 GALV.	SPLIT PIN 8X40 GALV.	

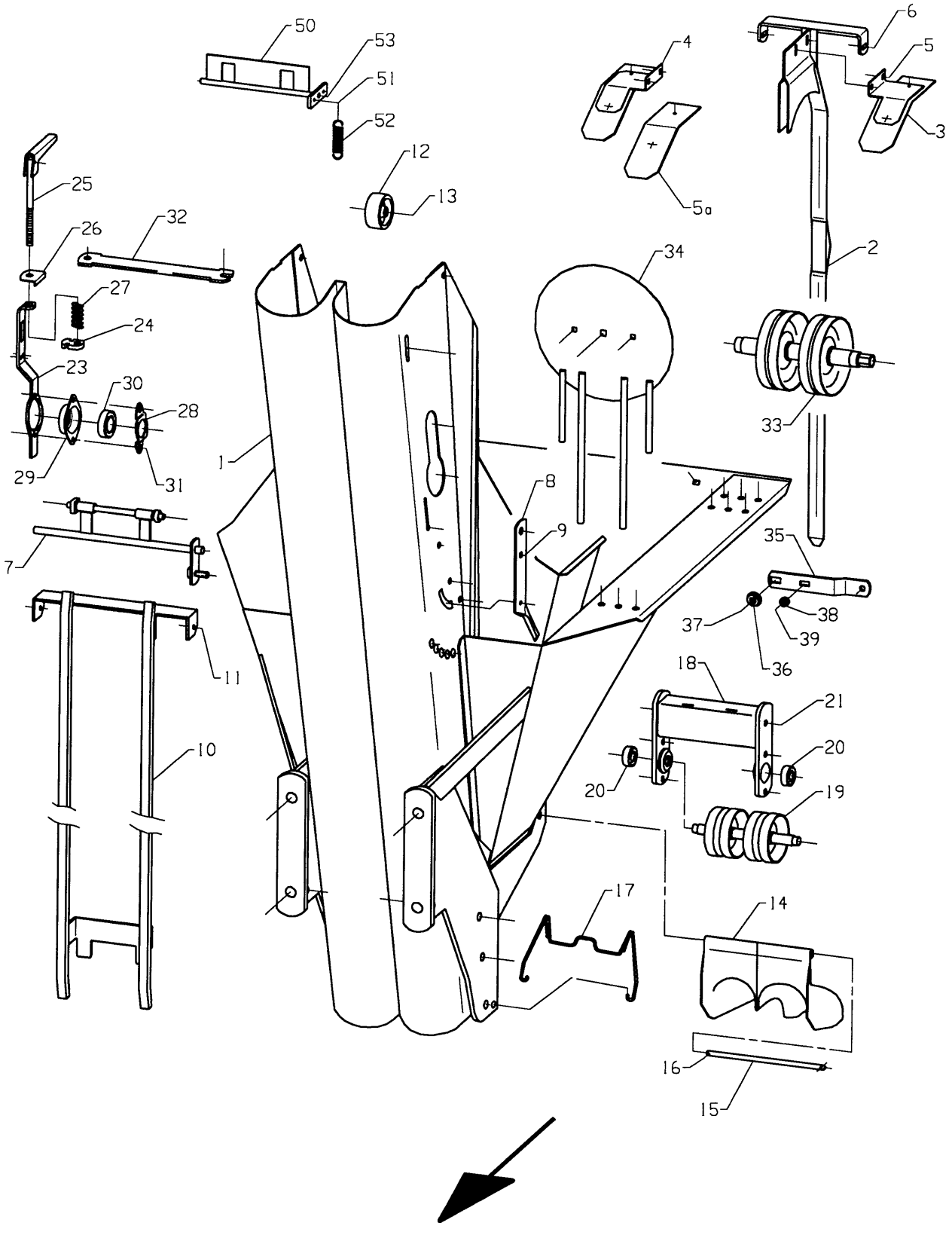
50
53
51
52
12
13
4
5a
6
5
3
2
34
25
26
32
27
24
23
30
28
29
31
1
8
9
7
11
10
33
35
37
38
39
36
18
21
20
20
19
17
14
16
15

Fig. 3

Utgave: / Issue:	1	Redskap: / Implement:	POTETSETTER SLEPT 6-RADS / POTATO PLANTER TRAILED 6-ROWS	3300 / 3300	Kverneland
Dato: / Date:	95-03	Enhet / Unit	SETTEENHET / PLANTING UNIT		Fig nr.: 3

Ref. No.	Delenr. Part no.	Ant. Qty.	Gjenstand	Description	Anmerkning Note
1	215010	1	SETTEENHET SV.	PLANTING UNIT	
2-5a	**215635**	**1**	**BELTESKINNE KOMPL.**	**BELT GUIDING BAR ASSY**	
2	215636	1	BELTESKINNE SV.	BELT RAIL	
3	215645	1	TOPPLATE V. KOMPL.	TOP PLATE LEFT ASSY	
4	215646	1	TOPPLATE H. KOMPL.	TOP PLATE RIGHT ASSY	
5	821420	4	LÅSESKRUE M8X20-4.6 ELZN.	CARRIAGE BOLT M8X20-4.6 GALV.	
5	860158	4	BRIKKE Ø8.4-17X1.6 ELZN	WASHER Ø8.4-Ø17X1.6	
5	852158	4	NYLOCKMUTTER M8 ELZN.	NYLOCK NUT M8 GALV.	
5a	215649	2	GUMMILEDER	GUIDING RUBBER	
6	821420	2	LÅSESKRUE M8X20-4.6 ELZN.	CARRIAGE BOLT M8X20-4.6 GALV.	
6	850158	2	SEKSKANTMUTTER M8-8 ELZN.	HEX. NUT M8-8 GALV.	
6	860158	2	BRIKKE Ø8.4-17X1.6 ELZN	WASHER Ø8.4-Ø17X1.6	
7	215081	1	RISTEAKSEL SV.	AGITATOR	
8	222599	1	RISTESPAK M/NAGLE	AGITATOR LEVER	
9	852158	1	NYLOCKMUTTER M8 ELZN.	NYLOCK NUT M8 GALV.	
10	215035	1	STØTTESKINNE SV.	SUPPORTING BAR	
11	813416	2	SEKSKANTSKRUE M8X16-8.8 ELZN	HEX. BOLT M8X16-8.8 GALV.	
11	852158	2	NYLOCKMUTTER M8 ELZN.	NYLOCK NUT M8 GALV.	
11	860158	2	BRIKKE Ø8.4-17X1.6 ELZN	WASHER Ø8.4-Ø17X1.6	
12	241341	2	HJUL PLAST Ø50	WHEEL	
13	813450	2	SEKSKANTSKRUE M8X50-8.8 ELZN	HEX. BOLT M8X50-8.8 GALV.	
13	850158	4	SEKSKANTMUTTER M8-8 ELZN.	HEX. NUT M8-8 GALV.	
13	860158	6	BRIKKE Ø8.4-17X1.6 ELZN	WASHER Ø8.4-Ø17X1.6	
14	215025	1	SLUSE	CHUTE	
15	215049	1	BOLT Ø10-Ø4/230/Ø4	BOLT Ø10-Ø4/230/Ø4	
16	867013	2	FJØRPINNE Ø2.5X41 ELZN	SPRING PIN Ø2.5X41 GALV	
17	215026	1	SLUSEFJØR	SPRING	
18-20	**215131**	**1**	**BOTNLAGER SV.**	**LOWER BELT BEARING**	
18	215131	1	BOTNLAGER SV.	LOWER BELT BEARING	
19	215125	1	BOTNAKSEL SV.	LOWER BELT SHAFT	
20	870718	2	KULELAGER 6203 2RS-C3 SPESIAL	BALL BEARING 6203-2RS1-C3	
21	813620	2	SEKSKANTSKRUE M12X20-8.8 ELZN	HEX. BOLT M12X20-8.8 GALV.	
21	860163	2	BRIKKE Ø13-Ø24X2.5 ELZN	WASHER Ø13-Ø24X2.5	
22	813625	2	SEKSKANTSKRUE M12X25-8.8 ELZN	HEX. BOLT M12X25-8.8 GALV	
22	860163	2	BRIKKE Ø13-Ø24X2.5 ELZN	WASHER Ø13-Ø24X2.5	
23-30	**215090**	**2**	**LAGEROPPHENG KOMPL.**	**BEARING HOLDER ASSY**	
23	215091	1	LAGEROPPHENG	BEARING HOLDER	
24	222628	1	MUTTERBRIKKE	WASHER	
25	222621	1	STRAMMESKRUE KOMPL.	TENSION SCREW	
26	215032	1	STRAMMEBRIKKE	TENSION WASHER	
27	215093	1	TRYKKFJØR Ø4.5-Ø20X51	COMPRESSION SPRING	
28	215092	1	LAGERSTYRING	GUIDE BEARING	
29	219250	1	LAGERHUS Ø55-Ø36	BEARING HOUSING Ø55-Ø36	
30	870632	1	KULELAGER 6006-2RS	BALL BEARING 6006-2RS1	
31	839420	2	SENKSKRUE M/SPOR M8X20 ELZN.	SLOTTED COUNTERSUNK SCR.M8X20	
31	852158	2	NYLOCKMUTTER M8 ELZN.	NYLOCK NUT M8 GALV.	
31	860158	2	BRIKKE Ø8.4-17X1.6 ELZN	WASHER Ø8.4-Ø17X1.6	
32	215033	1	STRAMMEÅK	TENSION YOKE	
33	215120	1	TOPPAKSEL SV.	UPPER BELT SHAFT	
34	215058	1	TALLERKEN SV.	AGITATOR DISC	
35	215060	1	TALLERKENARM	AGITATOR DISC ARM	
26	221316	1	BØSSING	BUSHING	
37	821535	1	LÅSESKRUE M10X35-4.6 ELZN.	CARRIAGE BOLT M10X35-4.6 GALV.	
37	860160	1	BRIKKE Ø10.5-Ø21X2 ELZN	WASHER Ø10.5-Ø21X2	
37	852160	1	NYLOCKMUTTER M10 ELZN.	NYLOCK NUT M10 GALV.	
38	222640	1	HYLSE Ø11.4-Ø17.2X10	SPACER Ø11.4-Ø17.2X10	
39	821430	1	LÅSESKRUE M8X30-4.6 ELZN.	CARRIAGE BOLT M8x30-4.6 GALV	
39	860158	1	BRIKKE Ø8.4-17X1.6 ELZN	WASHER Ø8.4-Ø17X1.6	
39	852158	1	NYLOCKMUTTER M8 ELZN.	NYLOCK NUT M8 GALV.	

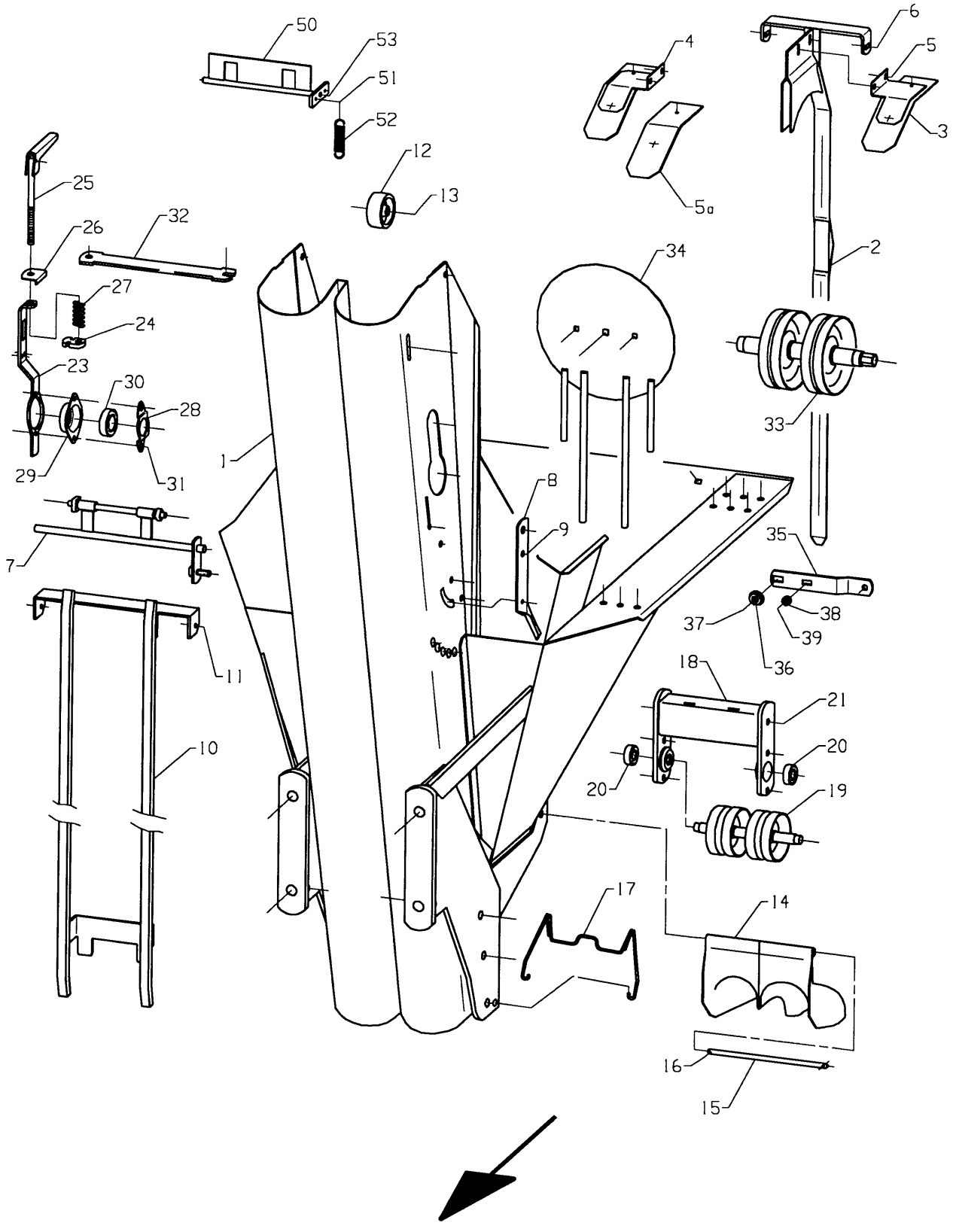
50
53
51
52
12
13
4
5a
6
5
3
25
26
32
27
24
23
30
28
29
31
34
2
33
1
8
9
7
35
37
38
39
36
18
21
20
20
19
11
10
17
14
16
15

Fig. 3

Utgave: / Issue:	1	Redskap: / Implement:	POTETSETTER SLEPT 6-RADS / POTATO PLANTER TRAILED 6-ROWS	3300 / 3300	Kverneland
Dato: / Date:	95-03	Enhet / Unit	SETTEENHET / PLANTING UNIT		Fig nr.: 3

Ref. No.	Delenr. Part no.	Ant. Qty.	Gjenstand	Description	Anmerkning Note
40	813905	4	SEKSKANTSKRUE M16X150-8.8 ELZN	HEX. BOLT M16X150-8.8	
41	860166	4	BRIKKE Ø17-Ø30X3 ELZN	WASHER Ø17-Ø30X3	
42	813525	2	SEKSKANTSKRUE M10X25-8.8 ELZN	HEX. BOLT M10X25-8.8 GALV.	
42	860160	4	BRIKKE Ø10.5-Ø21X2 ELZN	WASHER Ø10.5-Ø21X2	
42	852160	2	NYLOCKMUTTER M10 ELZN.	NYLOCK NUT M10 GALV.	
50-53	**215095**	**1**	**BELTESTOPPER EN RAD KOMPL.**	**CUP BELT STOPPER ONE ROW UNIT**	**EXTRA**
50	215096	1	BELTESTOPPER SV.	CUP BELT STOPPER	
51	813320	1	SEKSKANTSKRUE M6X20-8.8 ELZN	HEX. BOLT M6X20-8.8 GALV	
51	850156	1	SEKSKANTMUTTER M6-8 ELZN.	HEX. NUT M6-8 GALV.	
52	241438	1	STREKKFJØR Ø1.8-Ø18.2X57	SPRING	
53	813430	1	SEKSKANTSKRUE M8X30-8.8 ELZN	HEX. BOLT M8X30-8.8 GALV.	
53	852158	1	NYLOCKMUTTER M8 ELZN.	NYLOCK NUT M8 GALV.	

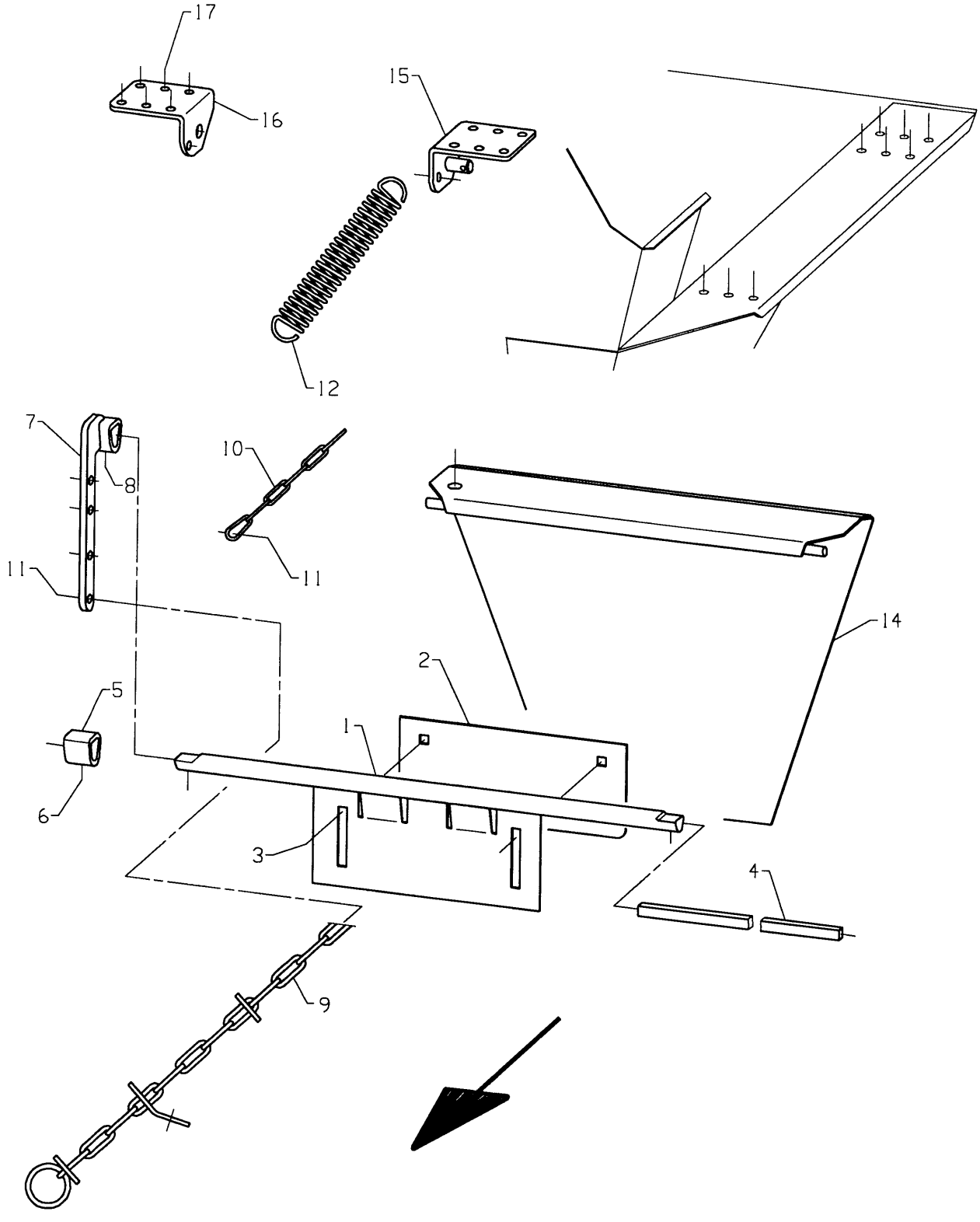

Fig. 4

Utgave: / Issue:	1	Redskap: / Implement:	POTETSETTER SLEPT 6-RADS / POTATO PLANTER TRAILED 6-ROWS	3300 / 3300	Kverneland
Dato: / Date:	95-03	Enhet / Unit	STRUPEPLATER / CHOKE PLATES		Fig nr.: 4

Ref. No.	Delenr. Part no.	Ant. Qty.	Gjenstand	Description	Anmerkning Note
1	215190	1	SVINGPLATE SV.	ADJUSTING PLATE	
2	215193	1	SVINGPLATEFORLENGER	ADJUSTING PLATE EXTENSION	
3	821420	12	LÅSESKRUE M8X20-4.6 ELZN.	CARRIAGE BOLT M8X20-4.6 GALV.	
3	855378	12	STJERNERATT M8	HANDWHEEL M8	
3	850158	12	SEKSKANTMUTTER M8-8 ELZN.	HEX. NUT M8-8 GALV.	
3	231499	12	BRIKKE Ø11-Ø22X5	WASHER Ø11-Ø22X5	
4	214595	4	FIRKANTAKSEL	SQUARE SHAFT	
5	222667	6	STOPPRING FIRK.12-M10	STOP RING	
6	813520	6	SEKSKANTSKRUE M10X20-8.8 ELZN	HEX. BOLT M10X20-8.8 GALV.	
7-12	**215174**	**2**	**FJØRARM MONTERT**	**SPRING ARM**	
7	215175	1	FJØRARM SV.	SPRING ARM	
8	813520	1	SEKSKANTSKRUE M10X20-8.8 ELZN	HEX. BOLT M10X20-8.8 GALV.	
9	215180	1	REGULERINGSKJETTING	ADJUSTING CHAIN	
10	219658	1	KJETTING Ø3-26X104	CHAIN Ø3-26X156	
11	813430	2	SEKSKANTSKRUE M8X30-8.8 ELZN	HEX. BOLT M8X30-8.8 GALV.	
11	850158	2	SEKSKANTMUTTER M8-8 ELZN.	HEX. NUT M8-8 GALV.	
11	852158	2	NYLOCKMUTTER M8 ELZN.	NYLOCK NUT M8 GALV.	
12	229219	1	STREKKFJØR Ø3.5-Ø26.5X132	SPRING	
13	813520	2	SEKSKANTSKRUE M10X20-8.8 ELZN	HEX. BOLT M10X20-8.8 GALV.	
13	852160	2	NYLOCKMUTTER M10 ELZN.	NYLOCK NUT M10 GALV.	
13	860169	2	UNDERLAGSKIVE 3/4" GALV	WASHER 3/4"	
14	215185	6	STRUPEPLATE M/GUMMI	ADJUSTING CHAIN W/RUBBER FLAP	
15	215063	1	FESTE	BRACKET	
16	215065	1	FESTE V.	BRACKET LH	
17	813420	4	SEKSKANTSKRUE M8X20-8.8 ELZN	HEX. BOLT M8X20-8.8 GALV	
17	860158	4	BRIKKE Ø8.4-17X1.6 ELZN	WASHER Ø8.4-Ø17X1.6	
17	852158	4	NYLOCKMUTTER M8 ELZN.	NYLOCK NUT M8 GALV.	

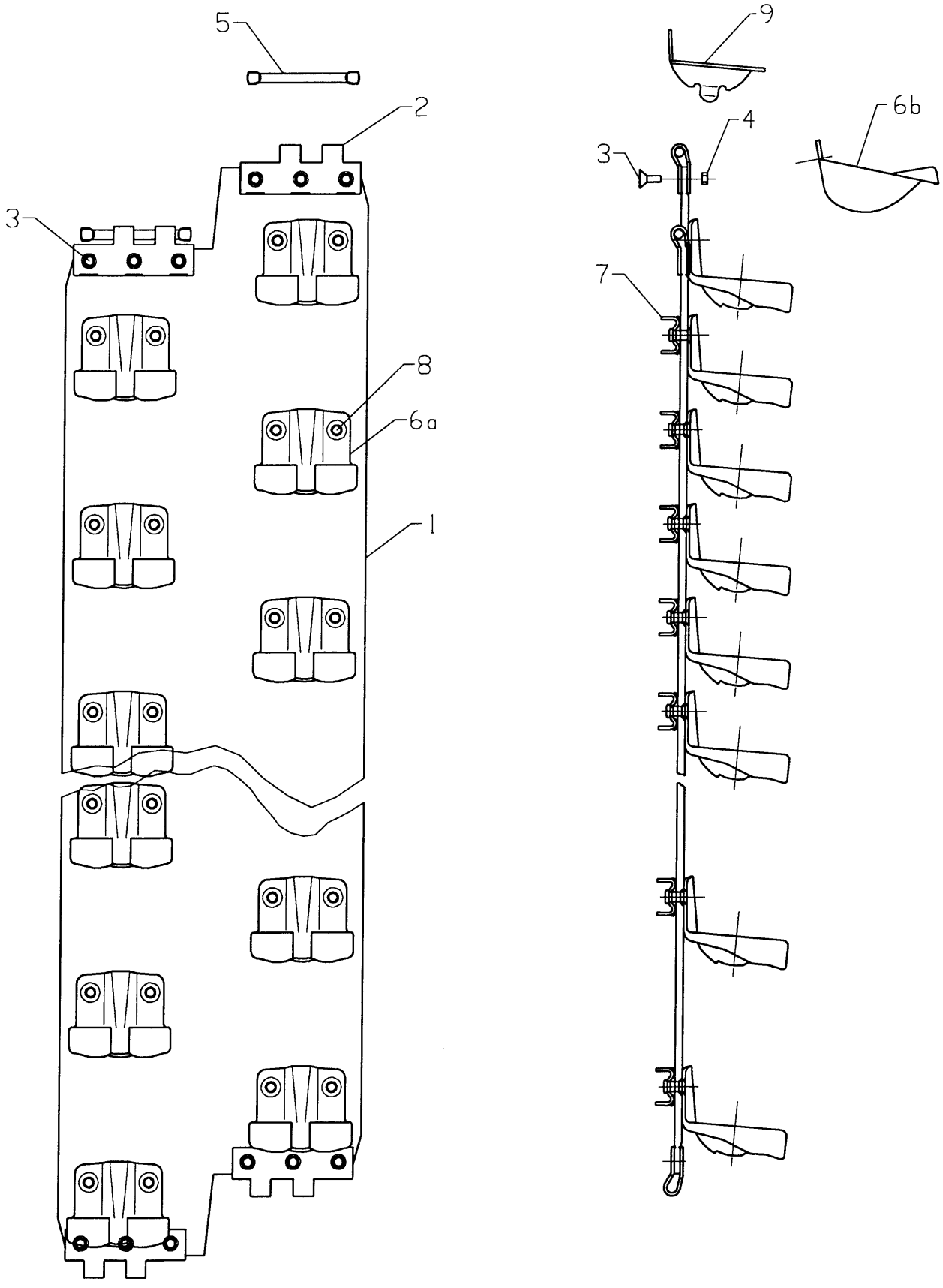

Fig. 5

Utgave: / Issue:	1	Redskap: / Implement:	POTETSETTER SLEPT 6-RADS / POTATO PLANTER TRAILED 6-ROWS	3300 / 3300	Kverneland
Dato: / Date:	95-03	Enhet / Unit	KOPPEBELTER / CUP BELTS		Fig nr.: 5

Ref. No.	Delenr. Part no.	Ant. Qty.	Gjenstand	Description	Anmerkning Note
	215161		**KOPPEBELTE 66-125**	**CUP BELT 66-125**	
	215163		**KOPPEBELTE 74-125**	**CUP BELT 74-125**	
1	215151	1	BELTEREIM 125	RUBBER BELT 125	
2	215156	4	HENGSLELEDD	CONNECTOR	
3	839316	12	SENKSKRUE KRYSSPOR M6X16 ELZN.	REC. COUNTERSUNK SCREW M6X16	
4	852156	12	NYLOCKMUTTER M6 ELZN.	NYLOCK NUT M6 GALV.	
5	215158	2	HENGSLEBOLT	CONNECTOR PIN	
6a	222822	34	KOPP 66	CUP	
6b	222823	34	KOPP 74	LARGE CUP	
7	215154	34	KOPPESTYRING	CUP GUIDING	
8	862063	68	POPPNAGLE 6.4X17.8 STÅL	RIVET 6.4X17.8 STEEL	
9a	222821	136	INNL.KOPP FOR 74 KOPP	LARGE INSERT	EXTRA
9b	222825	136	INNL.KOPP FOR 66 KOPP	SMALL CUP INSERT	"

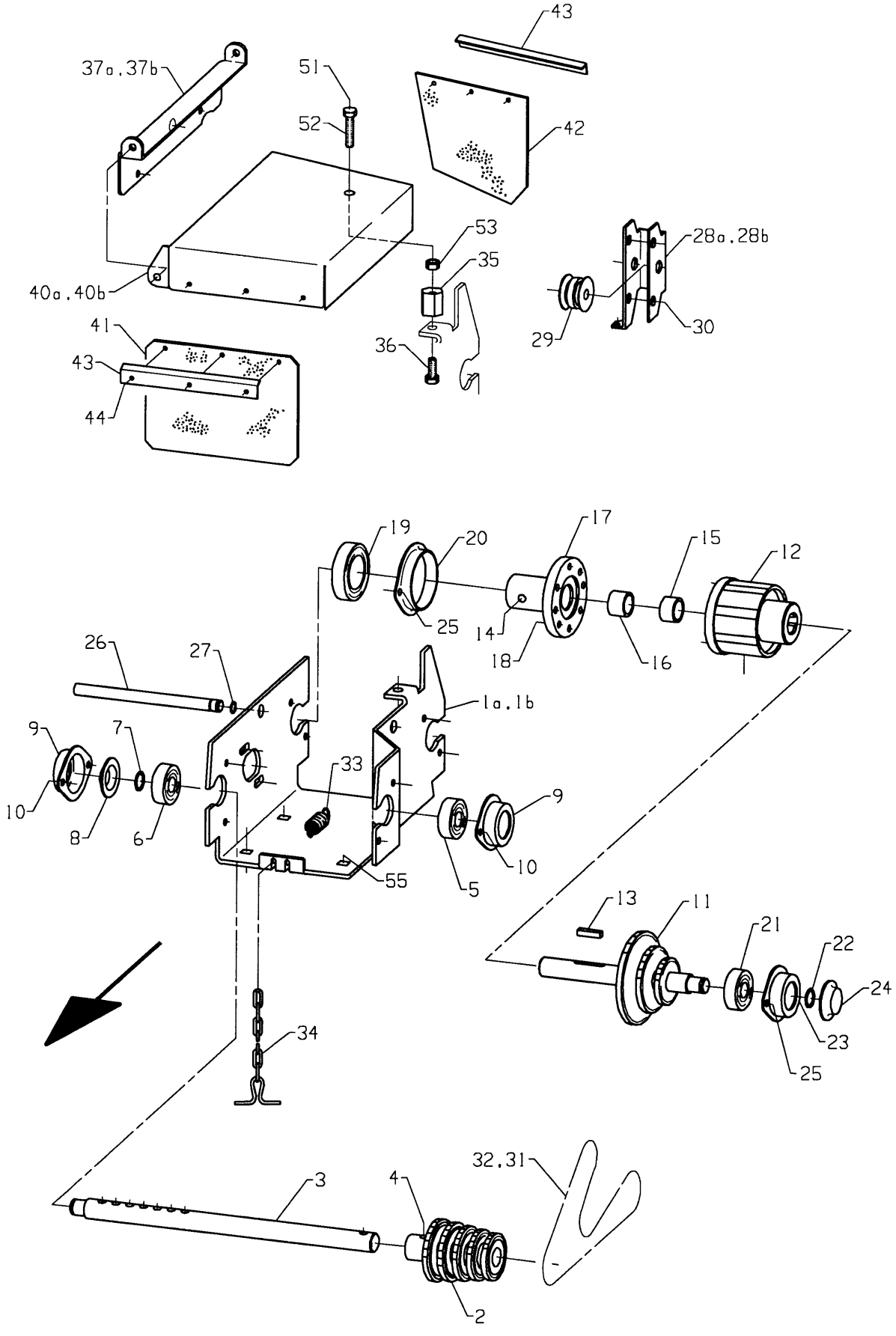
43
37a.37b
51
52
42
53
35
28a.28b
40a.40b
29
30
41
43
36
44
19
20
17
15
12
25
14
18
16
26
27
1a.1b
9
7
33
9
10
8
6
10
55
5
13
11
21
22
24
23
25
34
32.31
3
4
2

Fig. 6

Utgave: / Issue:	1	Redskap: / Implement:	POTETSETTER SLEPT 6-RADS / POTATO PLANTER TRAILED 6-ROWS	3300 / 3300	Kverneland
Dato: / Date:	95-03	Enhet / Unit	GEARKASSER / GEAR BOXES		Fig nr.: 6

Ref. No.	Delenr. Part no.	Ant. Qty.	Gjenstand	Description	Anmerkning Note
1a-53	**213850**	**1**	**GEARKASSE 6-R V. KOMPL.**	**GEAR BOX 6-R ASSY LH**	
1b-53	**213851**	**1**	**GEARKASSE 6-R H. KOMPL.**	**GEAR BOX 6-R ASSY RH**	
1a	213852	1	GEARKASSE 6-R V.	GEAR BOX 6-R LH	
1b	213853	1	GEARKASSE 6-R H.	GEAR BOX 6-R RH	
2	215261	1	KJEDEHJUL 5/8" 11-12-13-14-15T	SPROCKET 5/8" 11-12-13-14-15T	
3	215272	1	DRIVAKSEL 6R UTG.	DRIVE SHAFT 6R OUT.	
4	867081	1	RØRPINNE Ø8X36XØ34	PIN Ø8X36XØ34	
5	870727	1	KULELAGER 6205-2RS	BALL BEARING 6205-2RS	
6	870822	1	KULELAGER 6304-2RS	BALL BEARING 6304-2RS1	
7	868420	1	LÅSERING UTV. A20X1.2	CIRCLIP A20X1.2	
8	281633	1	DEKSEL Ø52	COVER	
9	215101	2	LAGERHUS Ø52-Ø37	BEARING HOUSING Ø52-Ø37	
10	813420	4	SEKSKANTSKRUE M8X20-8.8 ELZN	HEX. BOLT M8X20-8.8 GALV	
10	860158	6	BRIKKE Ø8.4-17X1.6 ELZN	WASHER Ø8.4-Ø17X1.6	
10	852158	4	NYLOCKMUTTER M8 ELZN.	NYLOCK NUT M8 GALV.	
11-18	**213855**	**1**	**DRIVAKSEL 6R INNG. KPL.**	**DRIVE SHAFT 6R IN. ASSY**	
11	213856	1	DRIVAKSEL 6R INNG. SV.	DRIVE SHAFT 6R IN.	
12	700029	1	SIKKERHETSKOPLING EK32B	SAFETY COUPLING EK32B	
12a	700334	1	HUS	HOUSING	W.S 55.20.192
12b	700335	1	NAV	HUB	W.S 55.14.197
12c	700081	12	TAPP	CLUTCH TAP	W.S 55.01.07
12d	700126	12	FJØR, YTRE	OUTER SPRING	W.S 66.01.04
12e	700128	12	FJØR, INDRE	INNER SPRING	W.S 66.01.05
12f	700095	1	TETNINGSRING	SEALING RING	W.S 55.17.12
12g	700089	1	TRYKKRING	PRESSURE RING	W.S 55.15.10
12h	868580	1	LÅSERING INNV. I 80X2.5	CIRCLIP I80X2.50	W.S 62.15.00
12i	700107	1	SMØRENIPPEL	GREASE NIPPLE	W.S 63.15.05
13	231231	1	KILE 8 X 7 X 30	KEY 8 X 7 X 30	
14	831516	1	GJENGESTIFT 6KT HOL M10X16	HEADLESS SCREW M10X16	
15	258975	1	HYLSE Ø25-Ø32X17	SPACER Ø25-Ø32X17	
16	214340	1	LAGERFORING ø25-ø32X20	BEARING LINING Ø25-Ø32X20	
17	213860	1	DRIVBOSS INNG. SV.	BOSS IN.	
18	827220	6	SENKSKRUE M/6KT.HOL M8X20	INHEX COUNTERSUNK SCREW M8X20	
19	870647	1	KULELAGER 6009-2RS	BALL BEARING 6009-2RS	
20	215104	1	LAGERHUS Ø75-Ø75	BEARING HOUSING Ø75-Ø75	
21	870822	1	KULELAGER 6304-2RS	BALL BEARING 6304-2RS1	
22	868420	1	LÅSERING UTV. A20X1.2	CIRCLIP A20X1.2	
23	215101	1	LAGERHUS Ø52-Ø37	BEARING HOUSING Ø52-Ø37	
24	281633	1	DEKSEL Ø52	COVER	
25	813420	4	SEKSKANTSKRUE M8X20-8.8 ELZN	HEX. BOLT M8X20-8.8 GALV	
25	860158	8	BRIKKE Ø8.4-17X1.6 ELZN	WASHER Ø8.4-Ø17X1.6	
25	852158	4	NYLOCKMUTTER M8 ELZN.	NYLOCK NUT M8 GALV.	
26	213865	1	STRAMMEAKSEL Ø15X210	TENSION SHAFT Ø15X210	
27	868712	2	SPORRYTTER 12	CIRCLIP "E"-TYPE 12	
28a-30	**215255**	**1**	**KJEDESTRAMMER V. KOMPL.**	**CHAIN TENSIONER ASSY LH**	
28b-30	**214495**	**1**	**KJEDESTRAMMER H. KOMPL**	**CHAIN TENSIONER ASSY RH**	
28a	215256	1	HJULHOLDER V.	ROLLER BRACKET LH	
28b	214496	1	HJULHOLDER H.	ROLLER BRACKET RH	
29	222726	2	TRINSE	CHAIN ROLLER	
30	813650	2	SEKSKANTSKRUE M12X50-8.8 ELZN	HEX. BOLT M12X50-8.8 GALV.	
30	852162	2	NYLOCKMUTTER M12 ELZN.	NYLOCK NUT M12 GALV	
31	901633	1	RULLEKJEDE 5/8"X905	ROLLER CHAIN 5/8"X905	
32	901602	1	RULLEKJEDELÅS 5/8"	CONNECTING LINK 5/8"	
33	215269	1	STREKKFJØR Ø3-Ø17X80	TENSION SPRING Ø3-Ø17X80	
34	215260	1	STRAMMEKJETTING	TENSION CHAIN	
35	256571	1	MUTTER	NUT	
36	813520	1	SEKSKANTSKRUE M10X20-8.8 ELZN	HEX. BOLT M10X20-8.8 GALV.	
37a	213880	1	DEKSELHENGSLE V.	COVER PLATE LH	
37b	213881	1	DEKSELHENGSLE H.	COVER PLATE RH	

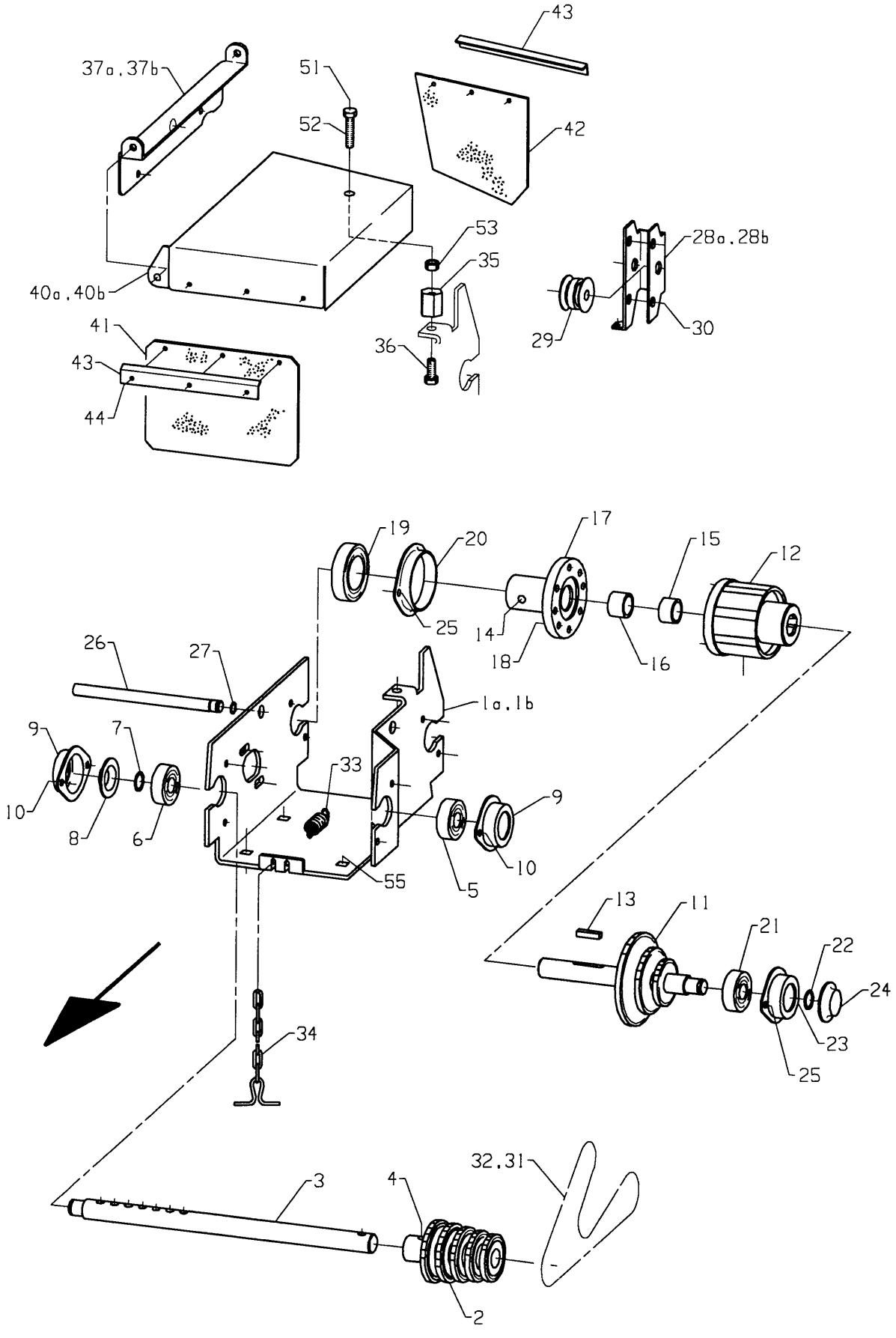
43
37a.37b
51
52
42
53
35
28a.28b
40a.40b
29
30
41
43
36
44
19
20
17
15
12
25
14
18
16
26
27
1a.1b
9
7
33
9
10
8
6
10
55
5
13
11
21
22
24
23
25
34
32.31
3
4
2

Fig. 6

Utgave: / Issue:	1	Redskap: / Implement:	POTETSETTER SLEPT 6-RADS / POTATO PLANTER TRAILED 6-ROWS	3300 / 3300	Kverneland
Dato: / Date:	95-03	Enhet / Unit	GEARKASSER / GEAR BOXES		Fig nr.: 6

Ref. No.	Delenr. Part no.	Ant. Qty.	Gjenstand	Description	Anmerkning Note
40a-44	**213870**	**1**	**GEARKASSEDEKSEL 6-R V. KOMPL.**	**COVER 6-R LH ASSY**	
40b-44	**213871**	**1**	**GEARKASSEDEKSEL 6-R H. KOMPL.**	**COVER 6-R RH ASSY**	
40a	213872	1	GEARKASSEDEKSEL 6-R V.	COVER 6-R LH	
40b	213873	1	GEARKASSEDEKSEL 6-R H.	COVER 6-R RH	
41	213875	1	GUMMISKJERM DEKSEL FRONT	RUBBER GUARD COVER FRONT	
42	213876	1	GUMMISKJERM DEKSEL BAK	RUBBER GUARD COVER REAR	
43	213877	2	KLEMLIST	BORDER	
44	862059	6	POPPNAGLE Ø4.8X16.3 ALUMINIUM	POP RIVET Ø4.8X16.3 AL.	
50	813425	2	SEKSKANTSKRUE M8X25-8.8 ELZN	HEX. BOLT M8X25-8.8 GALV.	
50	860158	4	BRIKKE Ø8.4-17X1.6 ELZN	WASHER Ø8.4-Ø17X1.6	
50	850158	2	SEKSKANTMUTTER M8-8 ELZN.	HEX. NUT M8-8 GALV.	
51	855380	1	STJERNERATT M10	HANDWHEEL M10	
52	813540	1	SEKSKANTSKRUE M10X40-8.8 ELZN	HEX. BOLT M10X40-8.8 GALV.	
53	852160	1	NYLOCKMUTTER M10 ELZN.	NYLOCK NUT M10 GALV.	
55	821630	8	LÅSESKRUE M12X30-8.8 ELZN.	CARRIAGE BOLT M12X30-4.6	
55	860163	8	BRIKKE Ø13-Ø24X2.5 ELZN	WASHER Ø13-Ø24X2.5	
55	852162	8	NYLOCKMUTTER M12 ELZN.	NYLOCK NUT M12 GALV	

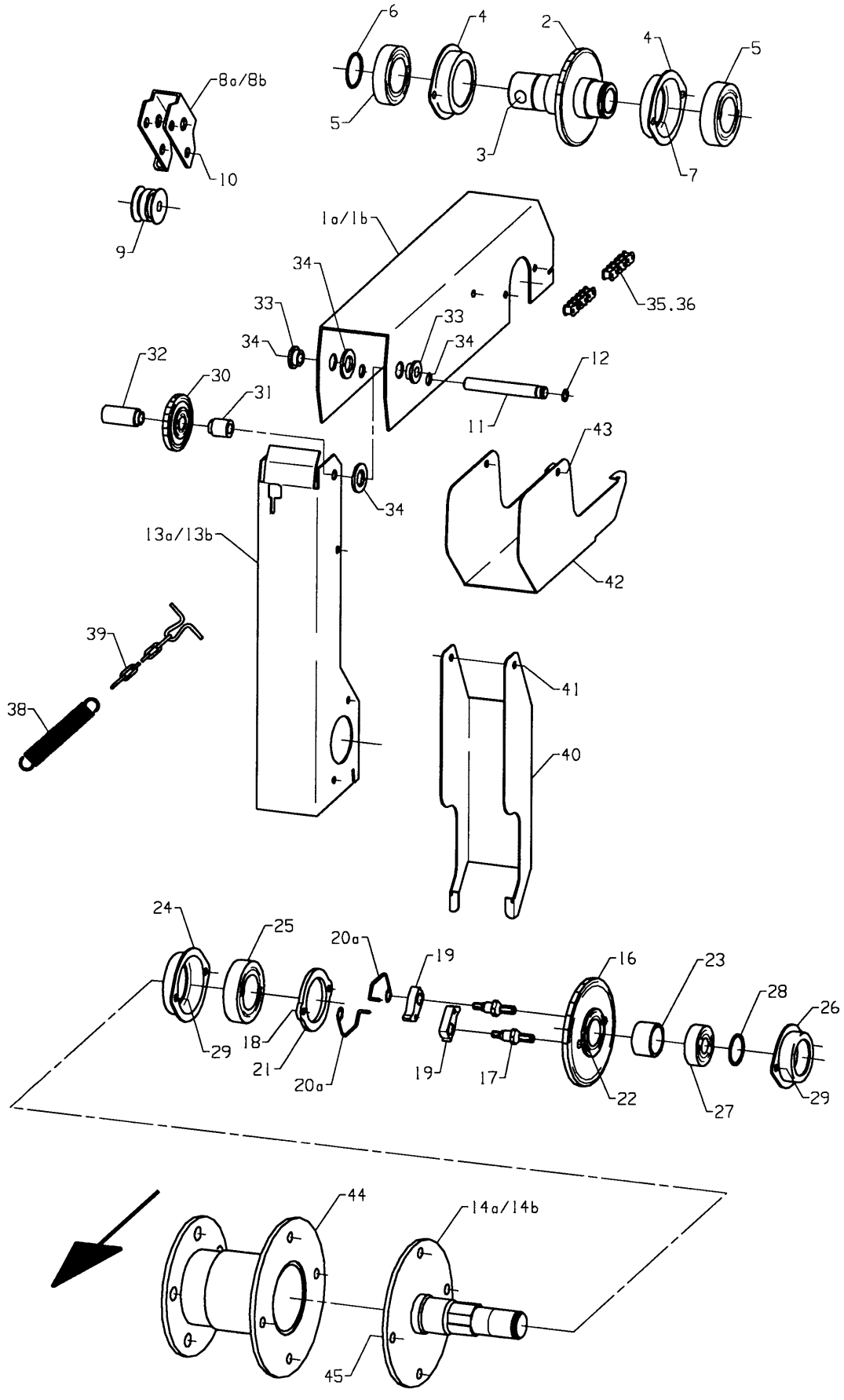
6
4
2
4
5
8a/8b
10
5
3
7
9
1a/1b
34
33
35.36
33
34
34
32
30
31
12
11
43
34
13a/13b
42
39
41
38
40
24
25
20a
19
16
23
28
26
29
18
21
20a
19
17
22
27
29
44
14a/14b
45

Fig. 7

Utgave: / Issue:	1	Redskap: / Implement:	POTETSETTER SLEPT 6-RADS / POTATO PLANTER TRAILED 6-ROWS	3300 / 3300	Kverneland
Dato: / Date:	95-03	Enhet / Unit	PRIMÆRDRIFT / PRIMARY DRIVES		Fig nr.: 7

Ref. No.	Delenr. Part no.	Ant. Qty.	Gjenstand	Description	Anmerkning Note
1a-46	**213800**	**1**	**GEARKASSEDRIFT V. KOMPL.**	**PRIMARY DRIVE UNIT LH**	
1b-46	**213801**	**1**	**GEARKASSEDRIFT H. KOMPL.**	**PRIMARY DRIVE UNIT RH**	
1a	213806	1	KJEDESKJERM ØVRE V.	UPPER CHAIN GUARD LH	
1b	213807	1	KJEDESKJERM ØVRE H.	UPPER CHAIN GAURD RH	
2	213830	1	KJEDEHJUL 5/8" 23T SV.	SPROCKET 5/8" 23T	
3	831716	1	GJENGESTIFT 6KT-HOL M16X16	HEADLESS SCREW M16X16	
4	215103	2	LAGERHUS Ø75-Ø60	BEARING HOUSING Ø75-Ø60	
5	870647	2	KULELAGER 6009-2RS	BALL BEARING 6009-2RS	
6	868445	2	LÅSERING UTV. A45X1.75	CIRCLIP A45X1.75	
7	813416	4	SEKSKANTSKRUE M8X16-8.8 ELZN	HEX. BOLT M8X16-8.8 GALV.	
7	860158	8	BRIKKE Ø8.4-17X1.6 ELZN	WASHER Ø8.4-Ø17X1.6	
7	852158	4	NYLOCKMUTTER M8 ELZN.	NYLOCK NUT M8 GALV.	
8a-10	**214495**	**1**	**KJEDESTRAMMER H. KOMPL**	**CHAIN TENSIONER ASSY RH**	
8b-10	**215255**	**1**	**KJEDESTRAMMER V. KOMPL.**	**CHAIN TENSIONER ASSY LH**	
8a	214496	1	HJULHOLDER H.	ROLLER BRACKET RH	
8b	215256	1	HJULHOLDER V.	ROLLER BRACKET LH	
9	222726	2	TRINSE	CHAIN ROLLER	
10	813650	2	SEKSKANTSKRUE M12X50-8.8 ELZN	HEX. BOLT M12X50-8.8 GALV.	
10	852162	2	NYLOCKMUTTER M12 ELZN.	NYLOCK NUT M12 GALV	
11	214499	1	STRAMMEAKSEL 15X102	TENSION SHAFT 15X102	
12	868712	2	SPORRYTTER 12	CIRCLIP "E"-TYPE 12	
13a	213804	1	KJEDESKJERM NEDRE V.	LOWER CHAIN GAURD LH	
13b	213805	1	KJEDESKJERM NEDRE H.	LOWER CHAIN GUARD RH	
14a	213820	1	FLENSAKSEL V. SV.	FLANGE SHAFT LH	
14b	213821	1	FLENSAKSEL H. SV.	FLANGE SHAFT RH	
16a-21	**216459**	**1**	**KJEDEHJUL 26T M/PALKOPLING V.**	**SPROCKET 26T W/P.COUPLING LH**	
16b-21	**216460**	**1**	**KJEDEHJUL 26T M/PALKOPLING H.**	**SPROCKET 26T W/P.COUPLING RH**	
16	216461	1	KJEDEHJUL M/LAGER 5/8" 26T-Ø35	SPROCKET W/BEARING 5/8"26T-Ø35	
17	218007	2	PALAKSEL M10-Ø13	PAWL AXLE	
18	852160	2	NYLOCKMUTTER M10 ELZN.	NYLOCK NUT M10 GALV.	
19	218005	2	PAL	PAWL	
20a	216466	2	PALFJØR HØGRE	PAWL SPRING RH	
20b	216465	2	PALFJØR VENSTRE	PAWL SPRING LH	
21	216464	1	STØTTERING	SUPPORT RING	
22	850158	2	SEKSKANTMUTTER M8-8 ELZN.	HEX. NUT M8-8 GALV.	
23	410328	1	HYLSE Ø35-Ø42.4X23	SPACER Ø35-Ø42.4X23	
24	215103	1	LAGERHUS Ø75-Ø60	BEARING HOUSING Ø75-Ø60	
25	870647	1	KULELAGER 6009-2RS	BALL BEARING 6009-2RS	
26	215102	1	LAGERHUS Ø62-Ø47	BEARING HOUSING Ø62-Ø47	
27	870636	1	KULELAGER 6007-RS	BALL BEARING 6007-RS	
28	868435	1	LÅSERING UTV. A35X1.5	CIRCLIP A35X1.50	
29	813416	4	SEKSKANTSKRUE M8X16-8.8 ELZN	HEX. BOLT M8X16-8.8 GALV.	
29	860158	8	BRIKKE Ø8.4-17X1.6 ELZN	WASHER Ø8.4-Ø17X1.6	
29	852158	4	NYLOCKMUTTER M8 ELZN.	NYLOCK NUT M8 GALV.	
30	221519	1	KJEDEHJUL 5/8" 13T.M/LAGER	SPROCKET 13T.ASSY.	
31	214390	1	BOSS ø12.5X22-ø17/5	BOSS ø12.5X22-ø17/5	
32	214391	1	BOSS ø12.5X48-ø17/5	BOSS ø12.5X48-ø17/5	
33	215199	2	LAGERFORING Ø12.7X9-Ø20/6	BEARING LINING Ø12.7XØ20/6	
34	813701	1	SEKSKANTSKRUE M12X110-8.8 ELZN	HEX. BOLT M12X110-8.8 GALV.	
34	852162	1	NYLOCKMUTTER M12 ELZN.	NYLOCK NUT M12 GALV	
34	860170	1	BRIKKE Ø21-Ø37X3 ELZN	WASHER Ø21-Ø37X3	
35	901649	1	RULLEKJEDE 5/8"X1984	ROLLER CHAIN 5/8"X1984	
36	901602	1	RULLEKJEDELÅS 5/8"	CONNECTING LINK 5/8"	
38	311745	1	STREKKFJØR Ø2.5-Ø20X130	SPRING	
39	215288	1	STRAMMEKJETTING	TENSION CHAIN	
40	213808	1	KJEDEDEKSEL NEDRE	LOWER CHAIN COVER	
41	813490	1	SEKSKANTSKRUE M8X90-8.8 ELZN	HEX. BOLT M8X90-8.8 GALV.	
41	860158	1	BRIKKE Ø8.4-17X1.6 ELZN	WASHER Ø8.4-Ø17X1.6	
41	852158	1	NYLOCKMUTTER M8 ELZN.	NYLOCK NUT M8 GALV.	

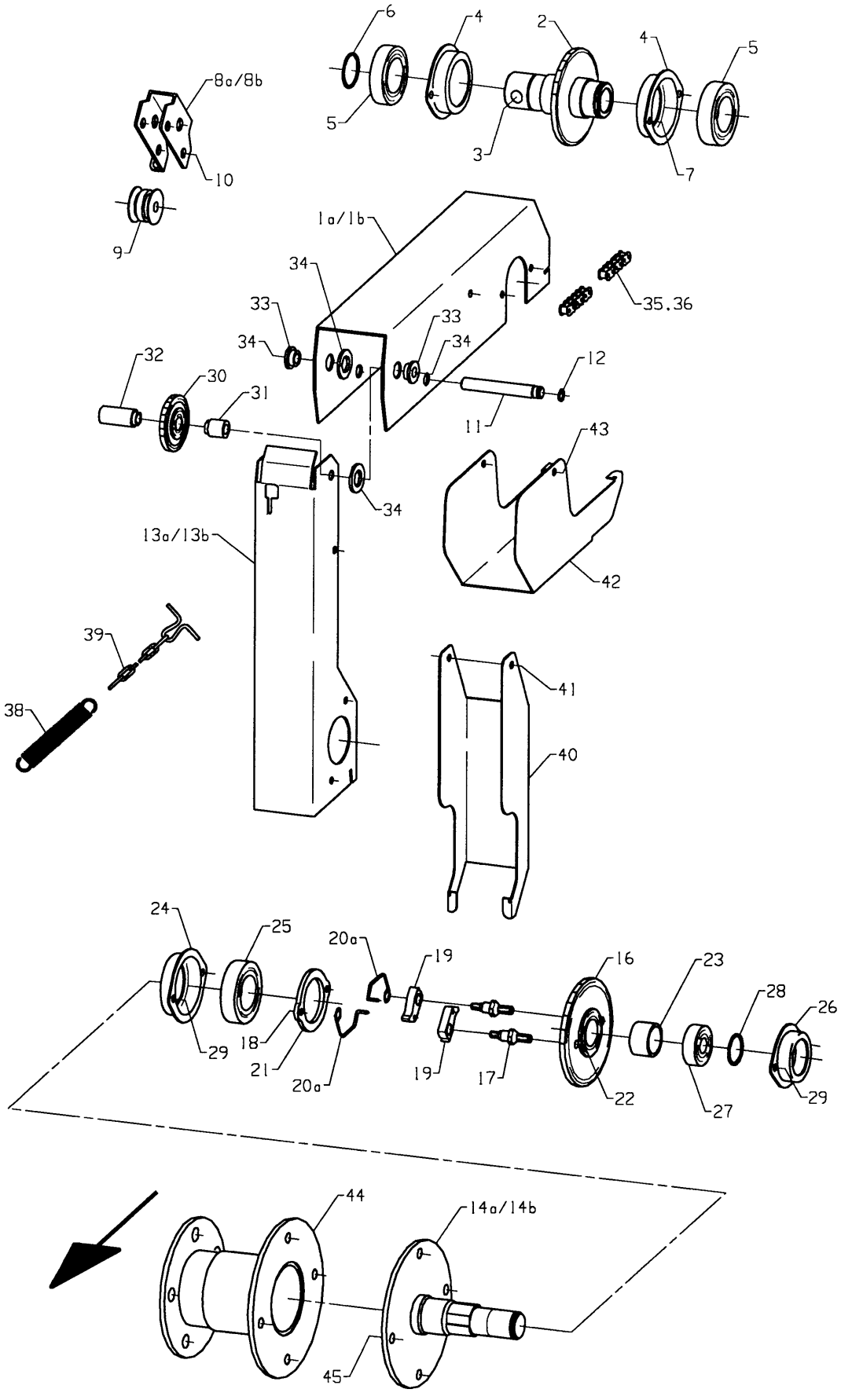
6
4
2
4
5
5
3
7
8a/8b
10
9
1a/1b
34
33
34
33
34
35.36
32
30
31
12
11
43
34
13a/13b
42
39
38
41
40
24
25
20a
19
16
23
28
26
29
18
21
20a
19
17
22
27
29
44
14a/14b
45

Fig. 7

Utgave: / Issue:	1	Redskap: / Implement:	POTETSETTER SLEPT 6-RADS / POTATO PLANTER TRAILED 6-ROWS	3300 / 3300	Kverneland
Dato: / Date:	95-03	Enhet / Unit	PRIMÆRDRIFT / PRIMARY DRIVES		Fig nr.: 7

Ref. No.	Delenr. Part no.	Ant. Qty.	Gjenstand	Description	Anmerkning Note
42	213810	1	KJEDEDEKSEL ØVRE	UPPER CHAIN COVER	
43	813500	1	SEKSKANTSKRUE M8X100-8.8 ELZN	HEX. BOLT M8X100-8.8	
43	852158	1	NYLOCKMUTTER M8 ELZN.	NYLOCK NUT M8 GALV.	
44	213815	1	DRIVHJULSBOSS SV.	WHEEL BOSS	
45	813630	4	SEKSKANTSKRUE M12X30-8.8 ELZN	HEX. BOLT M12X30-8.8 GALV.	
45	860163	8	BRIKKE Ø13-Ø24X2.5 ELZN	WASHER Ø13-Ø24X2.5	
45	852162	4	NYLOCKMUTTER M12 ELZN.	NYLOCK NUT M12 GALV	
46	215671	5	FJØRSKIVE Ø16.5 M.KULE R14	WASHER	

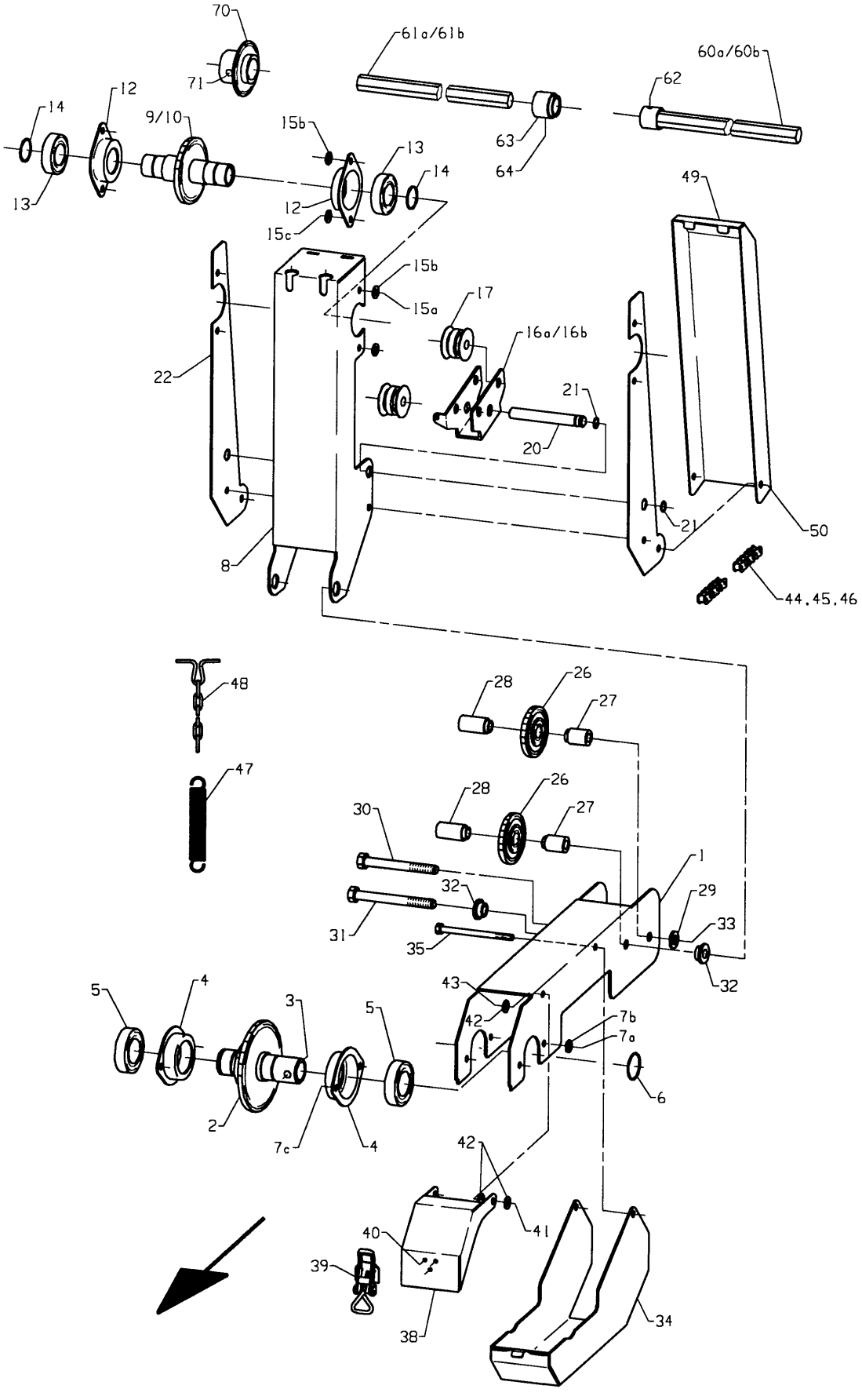
70
71
61a/61b
60a/60b
62
63
64
14
12
9/10
15b
13
14
12
15c
49
15b
15a
17
16a/16b
22
21
20
21
50
8
44,45,46
48
47
28
26
27
28
26
27
30
1
32
29
31
33
35
32
43
5
4
3
5
42
7b
7a
6
2
7c
4
42
41
40
39
38
34

Fig. 8

Utgave: / Issue:	1	Redskap: / Implement:	POTETSETTER SLEPT 6-RADS / POTATO PLANTER TRAILED 6-ROWS	3300 / 3300	Kverneland
Dato: / Date:	95-03	Enhet / Unit	SEKUNDÆRDRIFT / SECONDARY DRIVES		Fig nr.: 8

Ref. No.	Delenr. Part no.	Ant. Qty.	Gjenstand	Description	Anmerkning Note
1a-50	**213750**		**TOPPAKSELDRIFT V. KOMPL.**	**SECONDARY DRIVE UNIT LH**	**STD**
1b-50	**213751**		**TOPPAKSELDRIFT H. KOMPL.**	**SECONDARY DRIVE UNIT RH**	"
1c-50	**213752**		**TOPPAKSELDRIFT V. KOMPL.HIGH R**	**SECONDARY DRIVE UNIT LH**	**HIGH RATIO**
1d-50	**213753**		**TOPPAKSELDRIFT H. KOMPL.HIGH R**	**SECONDARY DRIVE UNIT RH**	"
1	213754	1	KJEDESKJERM NEDRE	LOWER CHAIN GUARD	
2	214395	1	KJEDEHJUL 5/8"24-11T SV.	SPROCKET 5/8"24-11T	
3	866540	1	SPENNHYLSE 10X40	LOCK PIN 10X40	
4	215102	2	LAGERHUS Ø62-Ø47	BEARING HOUSING Ø62-Ø47	
5	870637	2	KULELAGER 6007-2RS M/GUMMISIDE	BALL BEARING 6007-2RS1	
6	868435	3	LÅSERING UTV. A35X1.5	CIRCLIP A35X1.50	
7a	813420	4	SEKSKANTSKRUE M8X20-8.8 ELZN	HEX. BOLT M8X20-8.8 GALV	
7b	860158	8	BRIKKE Ø8.4-17X1.6 ELZN	WASHER Ø8.4-Ø17X1.6	
7c	852158	4	NYLOCKMUTTER M8 ELZN.	NYLOCK NUT M8 GALV.	
8	213760	1	KJEDESKJERM ØVRE	UPPER CHAIN GUARD	
9	214396	1	KJEDEHJUL 5/8" 17T SV.	SPROCKET 5/8" 17T	STD
10	214397	1	KJEDEHJUL 5/8"24T SV.	SPROCKET 5/8" 24T	HIGH RATIO
12	219250	2	LAGERHUS Ø55-Ø36	BEARING HOUSING Ø55-Ø36	
13	870632	2	KULELAGER 6006-2RS	BALL BEARING 6006-2RS1	
14	868430	2	LÅSERING UTV. A30X1.50	CIRCLIP A30X1.50	
15a	813420	4	SEKSKANTSKRUE M8X20-8.8 ELZN	HEX. BOLT M8X20-8.8 GALV	
15b	860158	8	BRIKKE Ø8.4-17X1.6 ELZN	WASHER Ø8.4-Ø17X1.6	
15c	852158	4	NYLOCKMUTTER M8 ELZN.	NYLOCK NUT M8 GALV.	
16a-18	**215255**	**1**	**KJEDESTRAMMER V. KOMPL.**	**CHAIN TENSIONER ASSY LH**	
16b-18	**214495**	**1**	**KJEDESTRAMMER H. KOMPL**	**CHAIN TENSIONER ASSY RH**	
16a	215256	1	HJULHOLDER V.	ROLLER BRACKET LH	
16b	214496	1	HJULHOLDER H.	ROLLER BRACKET RH	
17	222726	2	TRINSE	CHAIN ROLLER	
18	813650	2	SEKSKANTSKRUE M12X50-8.8 ELZN	HEX. BOLT M12X50-8.8 GALV.	
18	852162	2	NYLOCKMUTTER M12 ELZN.	NYLOCK NUT M12 GALV	
20	214499	1	STRAMMEAKSEL 15X102	TENSION SHAFT 15X102	
21	868712	2	SPORRYTTER 12	CIRCLIP "E"-TYPE 12	
22	213762	2	SIDEDEKSEL	COVER	
23	813416	2	SEKSKANTSKRUE M8X16-8.8 ELZN	HEX. BOLT M8X16-8.8 GALV.	
24	860158	4	BRIKKE Ø8.4-17X1.6 ELZN	WASHER Ø8.4-Ø17X1.6	
25	852158	2	NYLOCKMUTTER M8 ELZN.	NYLOCK NUT M8 GALV.	
26	221519	2	KJEDEHJUL 5/8" 13T.M/LAGER	SPROCKET 13T.ASSY.	
27	214388	2	BOSS ø12.5X30-ø17/5	BOSS ø12.5X30-ø17/5	
28	214389	2	BOSS.ø12.5X40-ø17/5	BOSS.ø12.5X40-ø17/5	
29	860163	2	BRIKKE Ø13-Ø24X2.5 ELZN	WASHER Ø13-Ø24X2.5	
30	813700	1	SEKSKANTSKRUE M12X100-8.8 ELZN	HEX. BOLT M12X100-8.8 GALV.	
31	813701	1	SEKSKANTSKRUE M12X110-8.8 ELZN	HEX. BOLT M12X110-8.8 GALV.	
32	215199	2	LAGERFORING Ø12.7X9-Ø20/6	BEARING LINING Ø12.7XØ20/6	
33	852162	2	NYLOCKMUTTER M12 ELZN.	NYLOCK NUT M12 GALV	
34	213758	1	KJEDEDEKSEL UNDRE	LOWER CHAIN COVER	
35	813500	1	SEKSKANTSKRUE M8X100-8.8 ELZN	HEX. BOLT M8X100-8.8	
35	860158	4	BRIKKE Ø8.4-17X1.6 ELZN	WASHER Ø8.4-Ø17X1.6	
35	852158	1	NYLOCKMUTTER M8 ELZN.	NYLOCK NUT M8 GALV.	
38	213756	1	KJEDEDEKSEL FRAMRE	FRONT CHAIN COVER	
39	258749	1	EKSENTERLÅS	ECCENTRIC LOCK	
40	862057	3	POPPNAGLE Ø4.8X7.4 ALUMINIUM	POP NAIL Ø4.8X7.4 AL	
41	813420	2	SEKSKANTSKRUE M8X20-8.8 ELZN	HEX. BOLT M8X20-8.8 GALV	
42	860158	6	BRIKKE Ø8.4-17X1.6 ELZN	WASHER Ø8.4-Ø17X1.6	
43	852158	2	NYLOCKMUTTER M8 ELZN.	NYLOCK NUT M8 GALV.	
44	901647	1	RULLEKJEDE 5/8"X1952	CHAIN 5/8"X1952	
45	901605	1	RULLEKJEDE 5/8"X48	CHAIN 5/8"X45	HIGH RATIO
46	901602	1	RULLEKJEDELÅS 5/8"	CONNECTING LINK 5/8"	
47	311745	1	STREKKFJØR Ø2.5-Ø20X130	SPRING	
48	215288	1	STRAMMEKJETTING	TENSION CHAIN	
49	213764	1	KJEDEDEKSEL BAKRE	REAR CHAIN COVER	

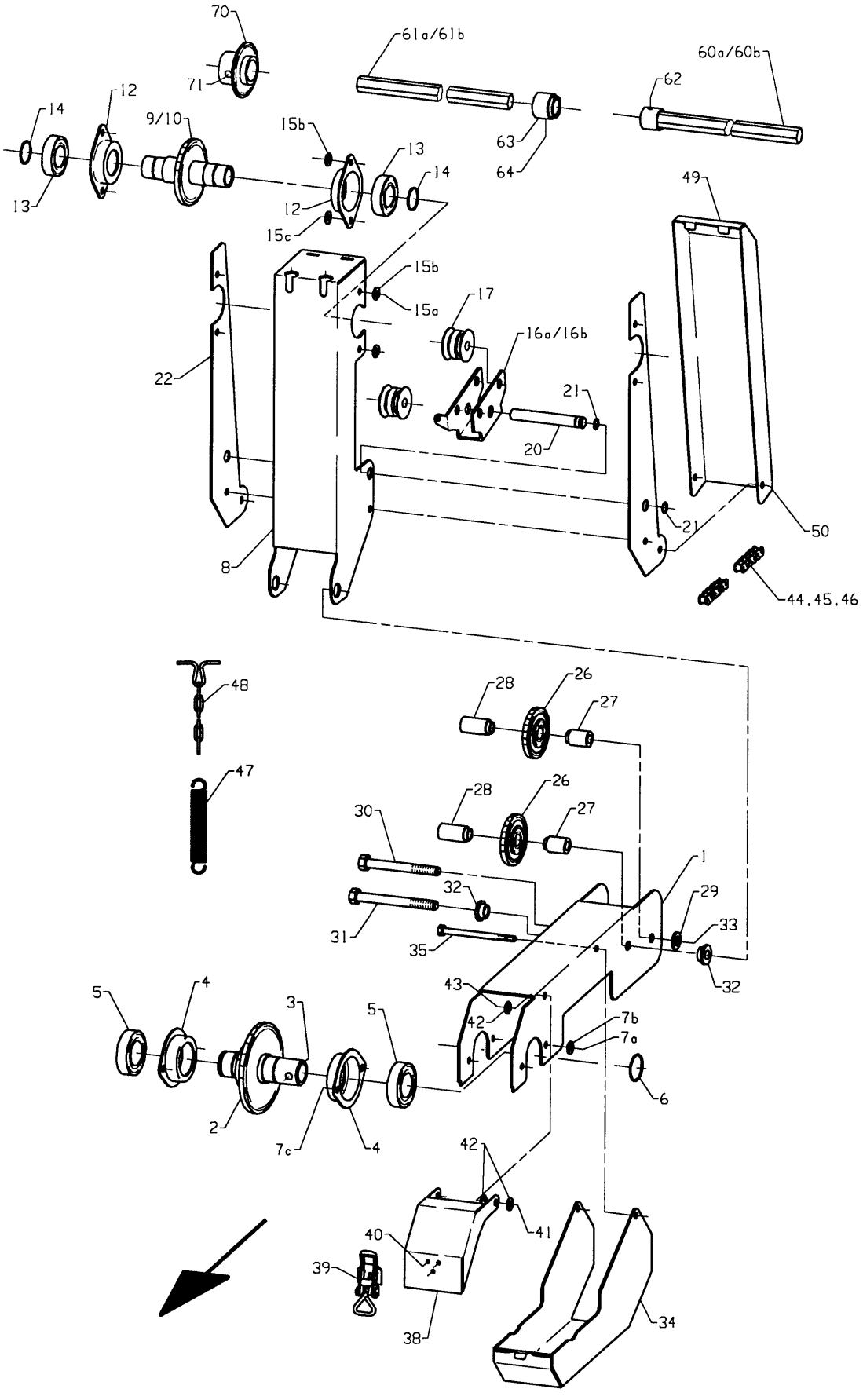
70
71
61a/61b
60a/60b
62
63
64
14
12
9/10
15b
13
14
12
15c
49
15b
15a
17
16a/16b
22
21
20
21
50
8
44.45.46
48
47
28
26
27
28
26
27
30
1
32
29
31
33
35
32
43
42
7b
7a
5
4
3
5
6
2
7c
4
42
41
40
39
38
34

Fig. 8

Utgave: / Issue:	1	Redskap: / Implement:	POTETSETTER SLEPT 6-RADS / POTATO PLANTER TRAILED 6-ROWS	3300 / 3300	Kverneland
Dato: / Date:	95-03	Enhet / Unit	SEKUNDÆRDRIFT / SECONDARY DRIVES		Fig nr.: 8

Ref. No.	Delenr. Part no.	Ant. Qty.	Gjenstand	Description	Anmerkning Note
50	813502	1	SEKSKANTSKRUE M8X120-8.8 ELZN	HEX. BOLT M8X120-8.8 ELZN	
50	813501	1	SEKSKANTSKRUE M8X110-8.8 ELZN	HEX. BOLT M8X110-8.8 ELZN	HIGH RATIO
50	852158	1	NYLOCKMUTTER M8 ELZN.	NYLOCK NUT M8 GALV.	
60a-64	**214550**	**1**	**TOPPAKSEL KOMPL.**	**TOP DRIVE SHAFT ASSY**	**3336-3340**
60b-64	**214795**	**1**	**TOPPAKSEL KOMPL.**	**TOP DRIVE SHAFT ASSY**	**3375-3385**
60a	214552	2	KOPLINGSAKSEL SV.	SHAFT COUPLING	3336-3340
60b	214796	2	KOPLINGSAKSEL SV.	SHAFT COUPLING	3375-3385
61a	214475	2	DRIVAKSEL	DRIVE SHAFT	3336-3340
61b	214798	2	DRIVAKSEL	DRIVE SHAFT	3375-3385
62	866336	2	SPENNHYLSE 6X36	TENSION PIN 6X36X1.25	
63	215141	8	STOPPRING Ø22-M12	STOP RING Ø22-M12	
64	831616	8	GJENGESTIFT 6KT.HOL M12X16	HEADLESS SCREW M12X16	
70	213725	1	KJEDEHJUL 1/2" 18T-Ø30 SV.	SPROCKET 1/2" 18T-Ø30	
71	866550	1	SPENNHYLSE 10X50	TENSION PIN 10X50X2	

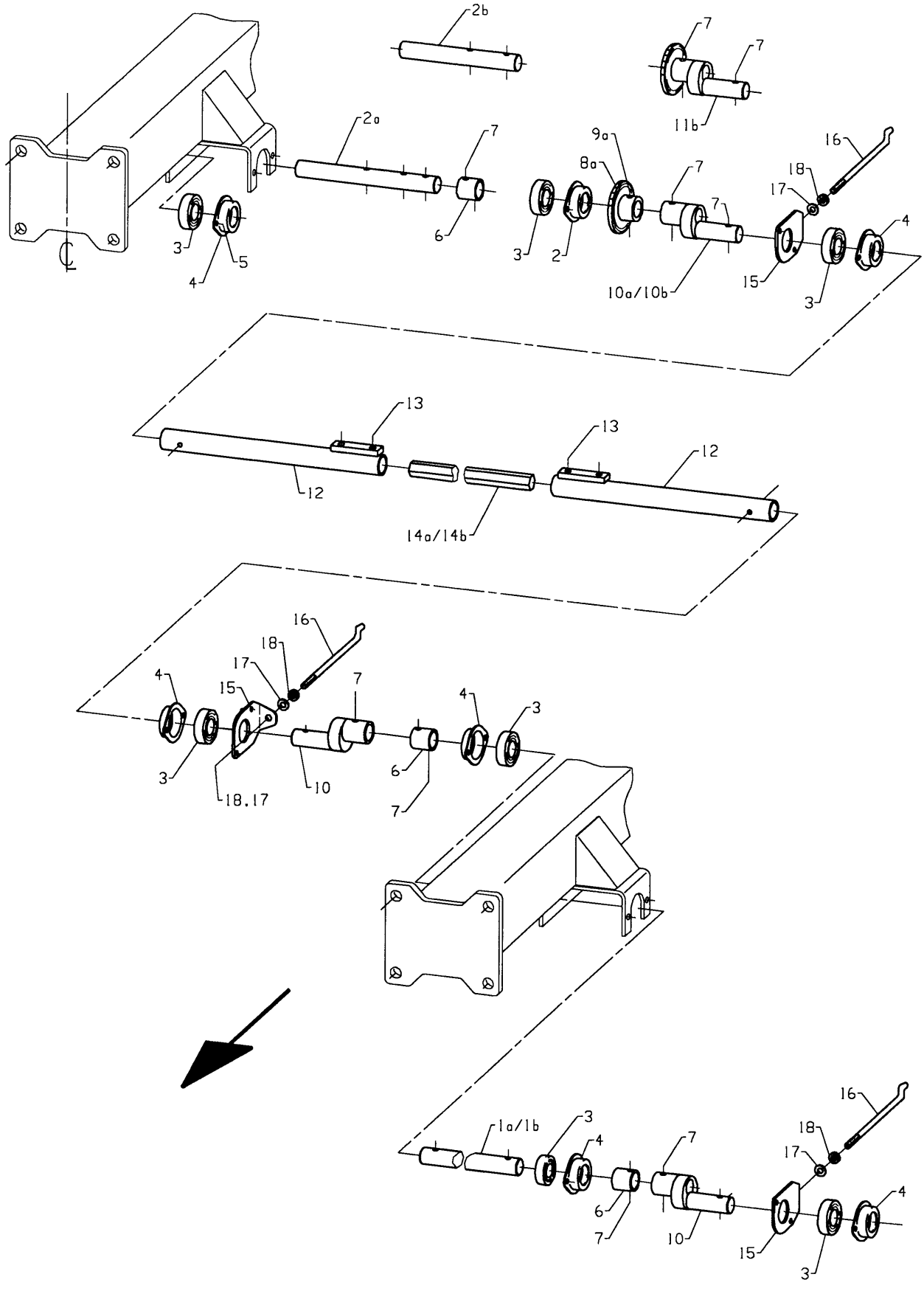
2b
7
7
11b
2a
7
9a
8a
7
16
18
17
7
4
3
5
4
6
3
2
10a/10b
15
3
13
13
12
12
14a/14b
16
18
17
15
7
4
4
3
3
18.17
10
6
7
16
1a/1b
3
4
7
18
17
4
6
7
10
15
3

Fig. 9

Utgave: / Issue:	1	Redskap: / Implement:	POTETSETTER SLEPT 6-RADS / POTATO PLANTER TRAILED 6-ROWS	3300 / 3300	Kverneland
Dato: / Date:	95-03	Enhet / Unit	SKAKEDRIVVERK / AGITATOR DRIVES		Fig nr.: 9

Ref. No.	Delenr. Part no.	Ant. Qty.	Gjenstand	Description	Anmerkning Note
1a	214528	2	AKSEL Ø30X498	SHAFT Ø30X498	3336-3340
1b	214781	2	AKSEL Ø30X432	SHAFT Ø30X432	3375-3385
2a	214529	2	AKSEL MIDT Ø30X251	CENTRE SHAFT Ø30X251	3336-3340
2b	214782	2	AKSEL MIDT Ø30X212	CENTRE SHAFT Ø30X212	3375-3385
3	870732	14	KULELAGER 6206-2RS	BALL BEARING 6206-2RS	
4	215102	14	LAGERHUS Ø62-Ø47	BEARING HOUSING Ø62-Ø47	
5	813425	28	SEKSKANTSKRUE M8X25-8.8 ELZN	HEX. BOLT M8X25-8.8 GALV.	
5	860158	28	BRIKKE Ø8.4-17X1.6 ELZN	WASHER Ø8.4-Ø17X1.6	
5	852158	28	NYLOCKMUTTER M8 ELZN.	NYLOCK NUT M8 GALV.	
6a	214532	8	HYLSE ø30-ø38X33 ø8	SPACER Ø30-Ø38X33 Ø8	3336-3340
6b	214532	4	HYLSE ø30-ø38X33 ø8	SPACER Ø30-Ø38X33 Ø8	3375-3385
7a	866540	14	SPENNHYLSE 10X40	LOCK PIN 10X40	3336-3340
7b	866540	12	SPENNHYLSE 10X40	LOCK PIN 10X40	3375-3385
8a	214530	2	KJEDEHJUL 5/8" 17T SV.	SPROCKET 5/8" 17T	3336-3340
9a	866545	2	SPENNHYLSE 10X45	TENSION PIN 10X45X2.0	"
10a	217185	6	EKSENTERTAPP	ECCENTRIC PIN	3336-3340
10b	217185	4	EKSENTERTAPP	ECCENTRIC PIN	3375-3385
11b	214783	2	EKSENTERTAPP SV.	ECCENTRIC PIN	"
12	217170	4	MELLOMAKSELHYLSE SV.	INTERMEDIATE SHAFT CASING	
13	831716	8	GJENGESTIFT 6KT-HOL M16X16	HEADLESS SCREW M16X16	
14a	217173	2	AKSEL	SHAFT	3336-3340
14b	214784	2	AKSEL	SHAFT	3375-3385
15	217187	6	LAGERFESTE	BRACKET	
16	217189	6	STAG	STAY	
17	860160	12	BRIKKE Ø10.5-Ø21X2 ELZN	WASHER Ø10.5-Ø21X2	
18	850160	12	SEKSKANTMUTTER M10-8 ELZN.	HEX. NUT M10-8 GALV.	

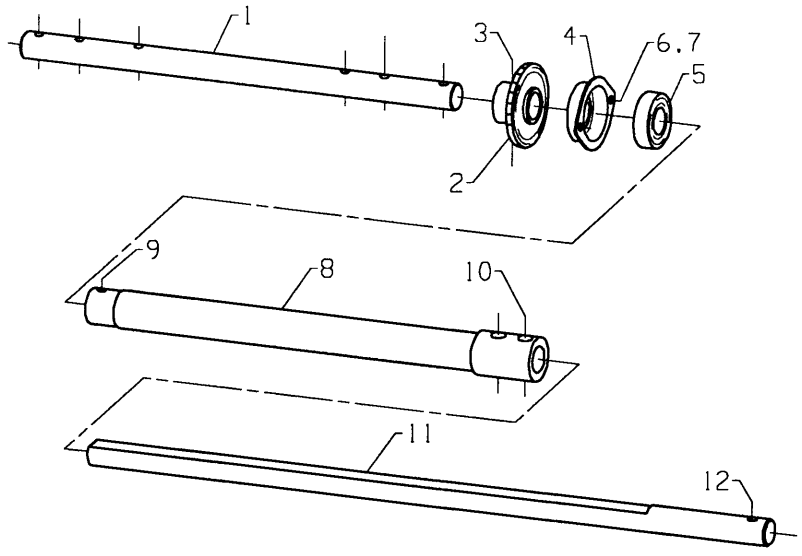
1
3
4
6.7
5
2
9
8
10
11
12

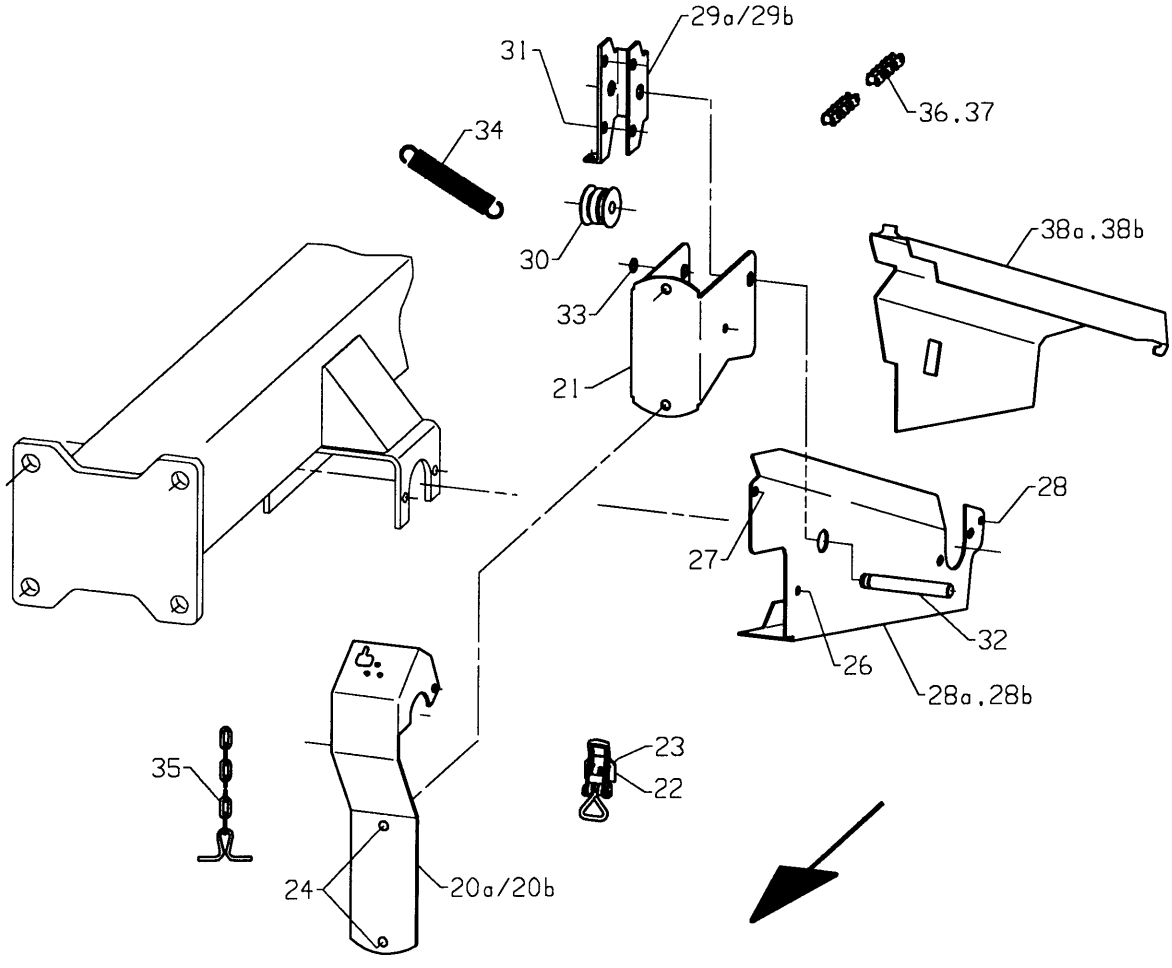
29a/29b
31
36.37
34
30
38a.38b
33
21
28
27
32
26
28a.28b
35
23
22
24
20a/20b

Fig. 10

Utgave: / Issue:	1	Redskap: / Implement:	POTETSETTER SLEPT 6-RADS / POTATO PLANTER TRAILED 6-ROWS	3300 / 3300	Kverneland
Dato: / Date:	95-03	Enhet / Unit	SKAKEDRIVVERK / AGITATOR DRIVES		Fig nr.: 10

Ref. No.	Delenr. Part no.	Ant. Qty.	Gjenstand	Description	Anmerkning Note
1-12	**213710**	**1**	**MELLOMDRIFT KPL**	**INTERMEDIATE DRIVE SHAFT**	
1	213714	1	AKSEL Ø30X486-Ø10X6STK	SHAFT Ø30X486-Ø10X6STK	
2	214530	2	KJEDEHJUL 5/8" 17T SV.	SPROCKET 5/8" 17T	
3	866550	2	SPENNHYLSE 10X50	TENSION PIN 10X50X2	
4	215102	2	LAGERHUS Ø62-Ø47	BEARING HOUSING Ø62-Ø47	
5	870732	2	KULELAGER 6206-2RS	BALL BEARING 6206-2RS	
6	813420	2	SEKSKANTSKRUE M8X20-8.8 ELZN	HEX. BOLT M8X20-8.8 GALV	
6	860158	2	BRIKKE Ø8.4-17X1.6 ELZN	WASHER Ø8.4-Ø17X1.6	
6	852158	2	NYLOCKMUTTER M8 ELZN.	NYLOCK NUT M8 GALV.	
7	813425	2	SEKSKANTSKRUE M8X25-8.8 ELZN	HEX. BOLT M8X25-8.8 GALV.	
7	860158	2	BRIKKE Ø8.4-17X1.6 ELZN	WASHER Ø8.4-Ø17X1.6	
7	852158	2	NYLOCKMUTTER M8 ELZN.	NYLOCK NUT M8 GALV.	
8	213716	2	DRIVHYLSE Ø30 SV.	DRIVE SPACER Ø30	
9	866545	2	SPENNHYLSE 10X45	TENSION PIN 10X45X2.0	
10	831716	4	GJENGESTIFT 6KT-HOL M16X16	HEADLESS SCREW M16X16	
11	213720	2	AKSEL Ø30X765-FLATFREST	SHAFT Ø30X765	
12	866550	2	SPENNHYLSE 10X50	TENSION PIN 10X50X2	
20a-38	**213730**	**1**	**SKAKEDRIFT KPL V.**	**AGITATOR DRIVE LH**	
20b-38	**213731**	**1**	**SKAKEDRIFT KPL H.**	**AGITATOR DRIVE RH**	
20a	213735	1	SKJERMFESTE V.	GUARD BRACKET LH	
20b	213736	1	SKJERMFESTE H.	GUARD BRACKET RH	
21	213738	1	STRAMMERHOLDER	TENSION BRACKET	
22	258749	1	EKSENTERLÅS	ECCENTRIC LOCK	
23	862058	3	POPPNAGLE Ø4.8X14.5 ALUMINIUM	POP NAIL Ø4.8X14.5 ALU.	
24	813605	2	SEKSKANTSKRUE M10X150-8.8 ELZN	HEX. BOLT M10X150-8.8	
24	860160	4	BRIKKE Ø10.5-Ø21X2 ELZN	WASHER Ø10.5-Ø21X2	
24	852160	2	NYLOCKMUTTER M10 ELZN.	NYLOCK NUT M10 GALV.	
25a	213740	1	SKAKEDRIFTSKJERM UNDRE V.	LOWER AGITATOR GUARD LH	
25b	213741	1	SKAKEDRIFTSKJERM UNDRE H.	LOWER AGITATOR GUARD RH	
26	813420	1	SEKSKANTSKRUE M8X20-8.8 ELZN	HEX. BOLT M8X20-8.8 GALV	
26	860158	2	BRIKKE Ø8.4-17X1.6 ELZN	WASHER Ø8.4-Ø17X1.6	
26	852158	1	NYLOCKMUTTER M8 ELZN.	NYLOCK NUT M8 GALV.	
27	813425	1	SEKSKANTSKRUE M8X25-8.8 ELZN	HEX. BOLT M8X25-8.8 GALV.	
27	860158	2	BRIKKE Ø8.4-17X1.6 ELZN	WASHER Ø8.4-Ø17X1.6	
27	852158	1	NYLOCKMUTTER M8 ELZN.	NYLOCK NUT M8 GALV.	
28	813470	1	SEKSKANTSKRUE M8X70-8.8 ELZN	HEX. BOLT M8X70-8.8 GALV.	
28	852158	1	NYLOCKMUTTER M8 ELZN.	NYLOCK NUT M8 GALV.	
29b-31	**215255**	**1**	**KJEDESTRAMMER V. KOMPL.**	**CHAIN TENSIONER ASSY LH**	
29b-31	**214495**	**1**	**KJEDESTRAMMER H. KOMPL**	**CHAIN TENSIONER ASSY RH**	
29a	215256	1	HJULHOLDER V.	ROLLER BRACKET LH	
29b	214496	1	HJULHOLDER H.	ROLLER BRACKET RH	
30	222726	2	TRINSE	CHAIN ROLLER	
31	813650	2	SEKSKANTSKRUE M12X50-8.8 ELZN	HEX. BOLT M12X50-8.8 GALV.	
31	852162	2	NYLOCKMUTTER M12 ELZN.	NYLOCK NUT M12 GALV	
32	215257	1	STRAMMEAKSEL Ø15X98	TENSION SHAFT	
33	868712	2	SPORRYTTER 12	CIRCLIP "E"-TYPE 12	
34	311745	1	STREKKFJØR Ø2.5-Ø20X130	SPRING	
35	215288	1	STRAMMEKJETTING	TENSION CHAIN	
36	901646	1	RULLEKJEDE 5/8"X1794	CHAIN 5/8"X1794	
37	901602	1	RULLEKJEDELÅS 5/8"	CONNECTING LINK 5/8"	
38a	213743	1	SKAKEDRIFTSKJERM ØVRE V.	UPPER AGITATOR GUARD LH	
38b	213744	1	SKAKEDRIFTSKJERM ØVRE H.	UPPER AGITATOR GUARD RH	

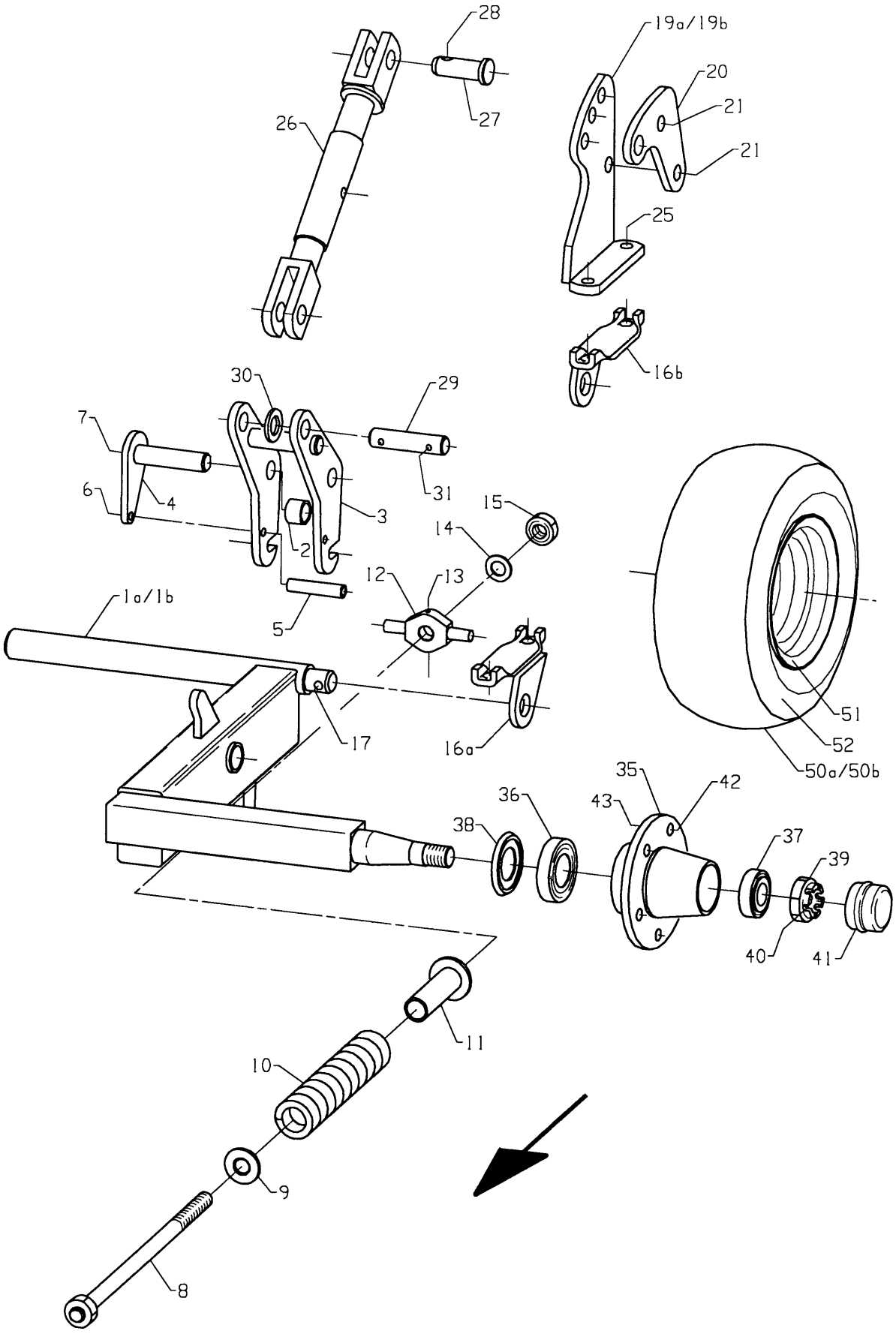
28
27
26
19a/19b
20
21
21
25
16b
30
29
7
6
4
31
15
14
3
2
12
13
1a/1b
5
17
16a
51
52
50a/50b
35
42
36
43
38
37
39
40
41
11
10
9
8

Fig. 11

Utgave: / Issue:	1	Redskap: / Implement:	POTETSETTER SLEPT 6-RADS / POTATO PLANTER TRAILED 6-ROWS	3300 / 3300	Kverneland
Dato: / Date:	95-03	Enhet / Unit	DRIVHJUL / DRIVE WHEELS		Fig nr.: 11

Ref. No.	Delenr. Part no.	Ant. Qty.	Gjenstand	Description	Anmerkning Note
1a-31	**214321**	**1**	**HJULARM KOMPL. V.**	**WHEEL ARM ASSY LH**	
1b-31	**214320**	**1**	**HJULARM KOMPL. H.**	**WHEEL ARM ASSY RH**	
1a	214311	1	HJULARM M/NAV V. SV.	WHEEL ARM W/HUB LH	
1b	214310	1	HJULARM M/NAV H. SV.	WHEEL ARM W/HUB RH	
2	214340	2	LAGERFORING ø25-ø32X20	BEARING LINING Ø25-Ø32X20	
3	214323	1	VIPPEARM SV.	LEVER ARM	
4	214330	1	LÅSEBOLT SV.	LOCK BOLT	
5	214341	1	RØR	TUBE	
6	813601	1	SEKSKANTSKRUE M10X110-8.8 ELZN	HEX. BOLT M10X110-8.8	
6	860160	2	BRIKKE Ø10.5-Ø21X2 ELZN	WASHER Ø10.5-Ø21X2	
6	852160	1	NYLOCKMUTTER M10 ELZN.	NYLOCK NUT M10 GALV.	
7	873545	1	SMØRENIPPEL M8X1.25 RETT	GREASE NIPPLE M8X1.25	
8	214335	1	FJÆRSKRUE SV.	SPRING SCREW	
9	214337	1	FJÆRSTOPPER	SPRING STOPPER	
10	214327	1	FJÆR	SPRING	
11	205286	1	FJØRHYLSE KPL.	SPRING COLLAR	
12	214326	1	GJENGETERS	ADJUSTMENT NUT	
13	873540	1	SMØRENIPPEL M6 RETT	GREASE NIPPLE M6	
14	860170	1	BRIKKE Ø21-Ø37X3 ELZN	WASHER Ø21-Ø37X3	
15	852167	1	NYLOCKMUTTER M20 ELZN.	NYLOCK NUT M20 GALV	
16a	217215	1	HJULARMFESTE V. SV.	WHEEL ARM BRACKET LEFT	
16b	217216	1	HJULARMFESTE H. SV.	WHEEL ARM BRACKET RIGHT	
19a-21	**214290**	**1**	**STILLSTAGFESTE V. KPL.**	**ADJUSTING BRACKET LH ASSY**	
19b-21	**214291**	**1**	**STILLSTAGFESTE H. KPL.**	**ADJUSTING BRACKET RH ASSY**	
19a	214292	1	STILLSTAGFESTE V. SV.	ADJUSTING BRACKET LH	
19b	214293	1	STILLSTAGFESTE H. SV.	ADJUSTING BRACKET RH	
20	214295	1	ARM	ARM	
21	814050	2	SEKSKANTSKRUE M20X50-8.8 ELZN	HEX. BOLT M20X50-8.8 GALV	
21	860170	4	BRIKKE Ø21-Ø37X3 ELZN	WASHER Ø21-Ø37X3	
21	852167	2	NYLOCKMUTTER M20 ELZN.	NYLOCK NUT M20 GALV	
25	813905	2	SEKSKANTSKRUE M16X150-8.8 ELZN	HEX. BOLT M16X150-8.8	
25	860166	2	BRIKKE Ø17-Ø30X3 ELZN	WASHER Ø17-Ø30X3	
25	852166	2	NYLOCKMUTTER M16 ELZN.	NYLOCK NUT M16 GALV	
26	703151	1	STREKKFISK	TENSION ROD	
27	703152	1	BOLT M/HODE Ø25X50	BOLT	
28	867061	1	RINGPINNE Ø12 (7/16") ELZN	RING PIN 12 (7/16") GALV.	
29	214333	1	BOLT ø25-ø8/64/ø8	BOLT ø25-ø8/64/ø8	
30	860175	2	BRIKKE Ø26-Ø44X4 ELZN	WASHER Ø25.3-Ø44X4	
31	866440	2	SPENNHYLSE 8X40	TENSION PIN 8X40X1.5	
35	411904	1	NAV HUS	HUB	
36	411905	1	LAGER INDRE 45X85X20,75	INNER BEARING	
37	411906	1	LAGER YTRE 30X62X17,25	OUTER BEARING	
38	411907	1	TETNINGSRING	SEAL	
39	411908	1	KRONEMUTTER Ø25	NUT	
40	865250	1	SPLINT 4X50 GALV.	SPLIT PIN 4X50 GALV	
41	410521	1	NAVKAPSEL FAD (LIK 411909)	CAP	
42	411911	5	HJULMUTTER M16X1.5	WHEEL NUT	
50a-52	**214366**	**1**	**HJUL 11.5/80 15.3 V. M/RIBBER**	**WHEEL 11.5/80 15.3 LH LUGGED**	
50b-52	**214367**	**1**	**HJUL 11.5/80-15.3 H. M/RIBBER**	**WHEEL 11.5/80-15.3 RH LUGGED**	
50a	214368	1	DEKK V.	TYRE LH	
50b	214369	1	DEKK H.	TYRE RH	
51	214370	1	FELG	RIM	
52	214371	1	SLANGE	TUBE	

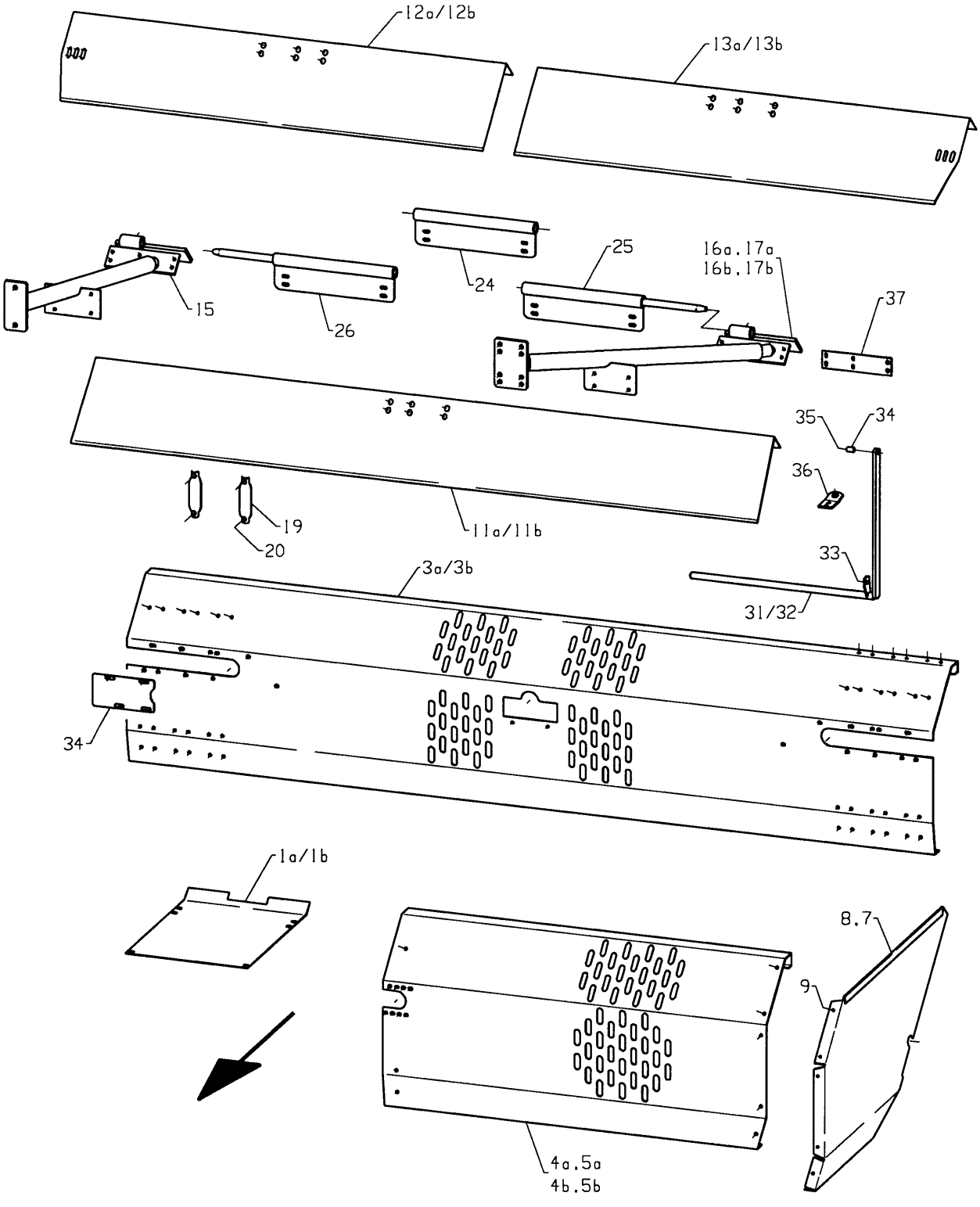
12a/12b
13a/13b
15
26
24
25
16a.17a
16b.17b
37
35
34
36
19
20
11a/11b
33
31/32
3a/3b
34
1a/1b
8.7
9
4a.5a
4b.5b

Fig. 12

Utgave: / Issue: 1	Redskap: / Implement: POTETSETTER SLEPT 6-RADS 3300 / POTATO PLANTER TRAILED 6-ROWS 3300	Kverneland
Dato: / Date: 95-03	Enhet / Unit TANK FREMRE DEL / HOPPER FRONT SECTION	Fig nr.: 12

Ref. No.	Delenr. Part no.	Ant. Qty.	Gjenstand	Description	Anmerkning Note
1a	214083	5	PLATE	PLATE	3336-3340
1b	214725	5	PLATE	PLATE	3375-3385
2	813416	10	SEKSKANTSKRUE M8X16-8.8 ELZN	HEX. BOLT M8X16-8.8 GALV.	
2	860158	10	BRIKKE Ø8.4-17X1.6 ELZN	WASHER Ø8.4-Ø17X1.6	
2	852158	10	NYLOCKMUTTER M8 ELZN.	NYLOCK NUT M8 GALV.	
3a	214035	1	TANKFRONTPLATE MIDT	TANK FRONT PLATE CENTRE	3336-3340
4a	214036	1	TANKFRONTPLATE V.	TANK FRONT PLATE LH	"
5a	214037	1	TANKFRONTPLATE H.	TANK FRONT PLATE RH	"
3b	214718	1	TANKFRONTPLATE MIDT	TANK FRONT PLATE CENTRE	3375-3385
4b	214719	1	TANKFRONTPLATE V.	TANK FRONT PLATE LH	"
5b	214720	1	TANKFRONTPLATE H.	TANK FRONT PLATE RH	"
6	813530	20	SEKSKANTSKRUE M10X30-8.8 ELZN	HEX. BOLT M10X30-8.8 GALV.	
6	860160	20	BRIKKE Ø10.5-Ø21X2 ELZN	WASHER Ø10.5-Ø21X2	
6	852160	20	NYLOCKMUTTER M10 ELZN.	NYLOCK NUT M10 GALV.	
7	214043	1	SIDEPLATE V.	SIDE PLATE LH	
8	214042	1	SIDEPLATE H.	SIDE PLATE RH	
9	813416	12	SEKSKANTSKRUE M8X16-8.8 ELZN	HEX. BOLT M8X16-8.8 GALV.	
9	860158	12	BRIKKE Ø8.4-17X1.6 ELZN	WASHER Ø8.4-Ø17X1.6	
9	852158	12	NYLOCKMUTTER M8 ELZN.	NYLOCK NUT M8 GALV.	
10	821630	4	LÅSESKRUE M12X30-8.8 ELZN.	CARRIAGE BOLT M12X30-4.6	
10	860163	4	BRIKKE Ø13-Ø24X2.5 ELZN	WASHER Ø13-Ø24X2.5	
10	852162	4	NYLOCKMUTTER M8 ELZN.	NYLOCK NUT M8 GALV.	
11a	214067	1	SKRÅPLATE	BEVEL PLATE	3336-3340
12a	214072	1	SKRÅPLATE YTRE H.	OUTER BEVEL PLATE RH	"
13a	214073	1	SKRÅPLATE YTRE V.	OUTER BEVEL PLATE LH	"
11b	214722	1	SKRåPLATE MIDT	BEVEL PLATE CENTRE	3375-3385
12b	214723	1	SKRåPLATE YTRE H.	OUTER BEVEL PLATE RH	"
13b	214724	1	SKRåPLATE YTRE V.	OUTER BEVEL PLATE LH	"
14	821630	2	LÅSESKRUE M12X30-8.8 ELZN.	CARRIAGE BOLT M12X30-4.6	
14	860163	4	BRIKKE Ø13-Ø24X2.5 ELZN	WASHER Ø13-Ø24X2.5	
14	852162	2	NYLOCKMUTTER M12 ELZN.	NYLOCK NUT M12 GALV	
15	214507	1	AVSTIVER MIDT SV.	RETAINER CENTRE	
16a	214513	1	STAG SV. V.	BAR LH	3336-3340
17a	214512	1	STAG SV. H.	BAR RH	"
16b	214728	1	STAG SV. V.	BAR LH	3375-3385
17b	214727	1	STAG SV.H.	BAR RH	"
18	831716	8	GJENGESTIFT 6KT-HOL M16X16	HEADLESS SCREW M16X16	
19	215005	5	KLAMMER	CLAMP	
20	813905	24	SEKSKANTSKRUE M16X150-8.8 ELZN	HEX. BOLT M16X150-8.8	
20	860166	10	BRIKKE Ø17-Ø30X3 ELZN	WASHER Ø17-Ø30X3	
21	813540	24	SEKSKANTSKRUE M10X40-8.8 ELZN	HEX. BOLT M10X40-8.8 GALV.	
21	860160	24	BRIKKE Ø10.5-Ø21X2 ELZN	WASHER Ø10.5-Ø21X2	
21	852160	24	NYLOCKMUTTER M10 ELZN.	NYLOCK NUT M10 GALV.	
22	813520	18	SEKSKANTSKRUE M10X20-8.8 ELZN	HEX. BOLT M10X20-8.8 GALV.	
22	860160	18	BRIKKE Ø10.5-Ø21X2 ELZN	WASHER Ø10.5-Ø21X2	
22	852160	18	NYLOCKMUTTER M10 ELZN.	NYLOCK NUT M10 GALV.	
23	214734	2	LOKK	COVER	
24a	214600	5	STøTTEHYLSE SV.	SUPPORTING COLLAR	3336-3340
24b	214600	3	STøTTEHYLSE SV.	SUPPORTING COLLAR	3375-3385
25	214601	2	STøTTEHYLSE SV.M/AKSEL V.	SUPPORTING COLLAR W/AXLE LH	
26	214602	1	STøTTEHYLSE SV.M/AKSEL H.	SUPPORTING COLLAR W/AXLE RH	
27a	821630	24	LÅSESKRUE M12X30-8.8 ELZN.	CARRIAGE BOLT M12X30-4.6	3336-3340
27a	860163	24	BRIKKE Ø13-Ø24X2.5 ELZN	WASHER Ø13-Ø24X2.5	"
27a	852162	24	NYLOCKMUTTER M12 ELZN.	NYLOCK NUT M12 GALV	"
27b	821630	16	LÅSESKRUE M12X30-8.8 ELZN.	CARRIAGE BOLT M12X30-4.6	3375-3385
27b	821640	16	LÅSESKRUE M12X40-4.6 ELZN.	CARRIAGE BOLT M12X40-4.6 GALV	"
27b	860163	16	BRIKKE Ø13-Ø24X2.5 ELZN	WASHER Ø13-Ø24X2.5	"
28	821640	8	LÅSESKRUE M12X40-4.6 ELZN.	CARRIAGE BOLT M12X40-4.6 GALV	
28	860163	8	BRIKKE Ø13-Ø24X2.5 ELZN	WASHER Ø13-Ø24X2.5	
28	852162	8	NYLOCKMUTTER M12 ELZN.	NYLOCK NUT M12 GALV	

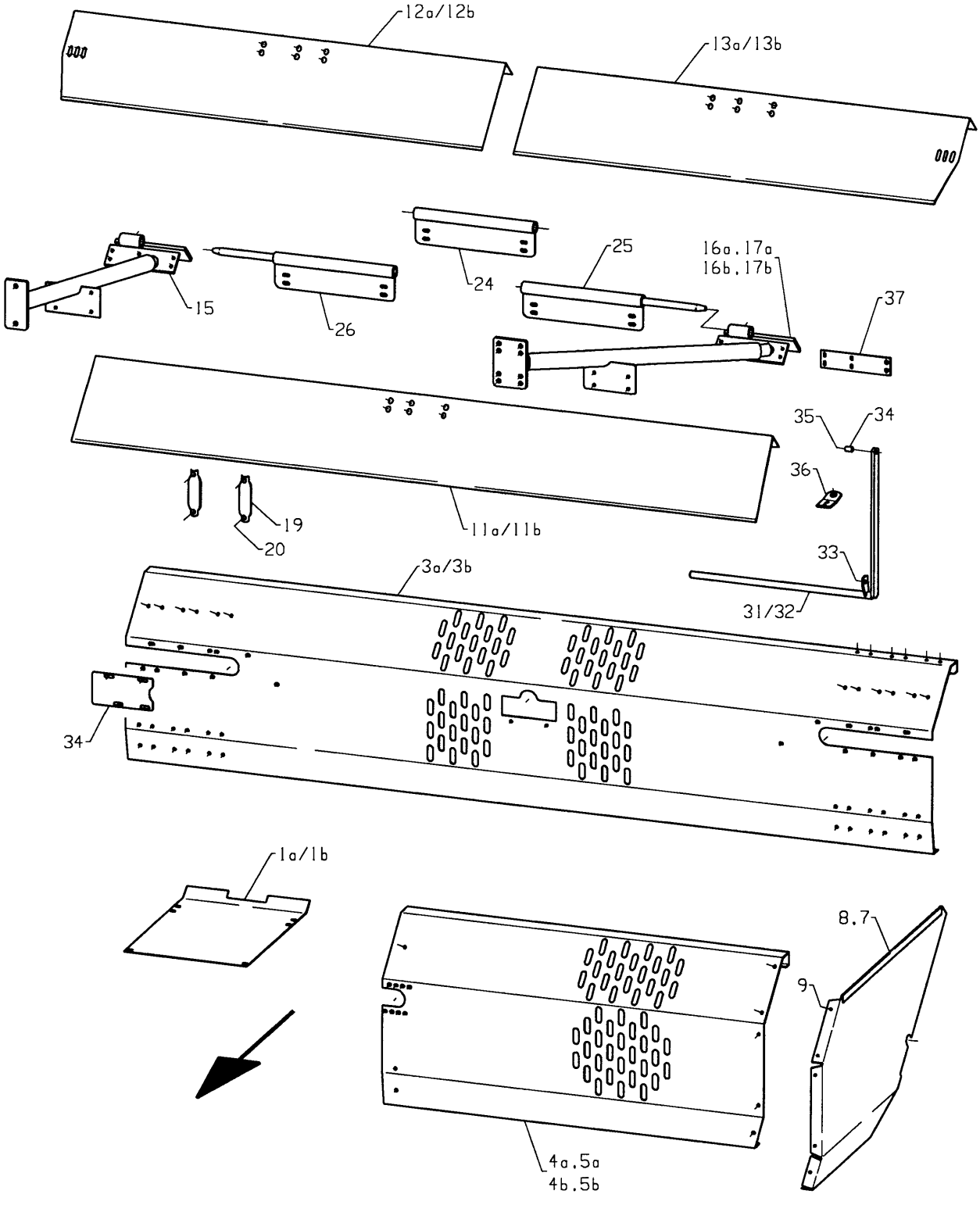
12a/12b
13a/13b
15
26
24
25
16a.17a
16b.17b
37
35
34
36
19
20
11a/11b
33
31/32
3a/3b
34
1a/1b
8.7
9
4a.5a
4b.5b

Fig. 12

Utgave: / Issue:	1	Redskap: / Implement:	POTETSETTER SLEPT 6-RADS / POTATO PLANTER TRAILED 6-ROWS	3300 / 3300	Kverneland
Dato: / Date:	95-03	Enhet / Unit	TANK FREMRE DEL / HOPPER FRONT SECTION		Fig nr.: 12

Ref. No.	Delenr. Part no.	Ant. Qty.	Gjenstand	Description	Anmerkning Note
29	**214614**	**1**	**HENGSLE KOMPL. V.**	**HINGE ASSY LH**	
30	**214615**	**1**	**HENGSLE KOMPL. H.**	**HINGE ASSY RH**	
31	214608	1	HENGSLE SV. V.	HINGE LH	
32	214609	1	HENGSLE SV. H.	HINGE RH	
33	821520	1	LÅSESKRUE M10X20-4.6 ELZN.	CARRIAGE BOLT M10X20-4.6 GALV	
33	852160	1	NYLOCKMUTTER M10 ELZN.	NYLOCK NUT M10 GALV.	
34	219656	1	HYLSE Ø11.4-Ø17.2X24	COLLAR Ø11.4-Ø17.2X24	
35	821550	1	LÅSESKRUE M10X50-4.6 ELZN.	CARRIAGE BOLT M10X50-4.6 GALV	
35	860160	1	BRIKKE Ø10.5-Ø21X2 ELZN	WASHER Ø10.5-Ø21X2	
35	852160	1	NYLOCKMUTTER M10 ELZN.	NYLOCK NUT M10 GALV.	
36	214591	4	FESTE YTRE	OUTER BRACKET	
37	214737	8	SKIMS	PLATE	

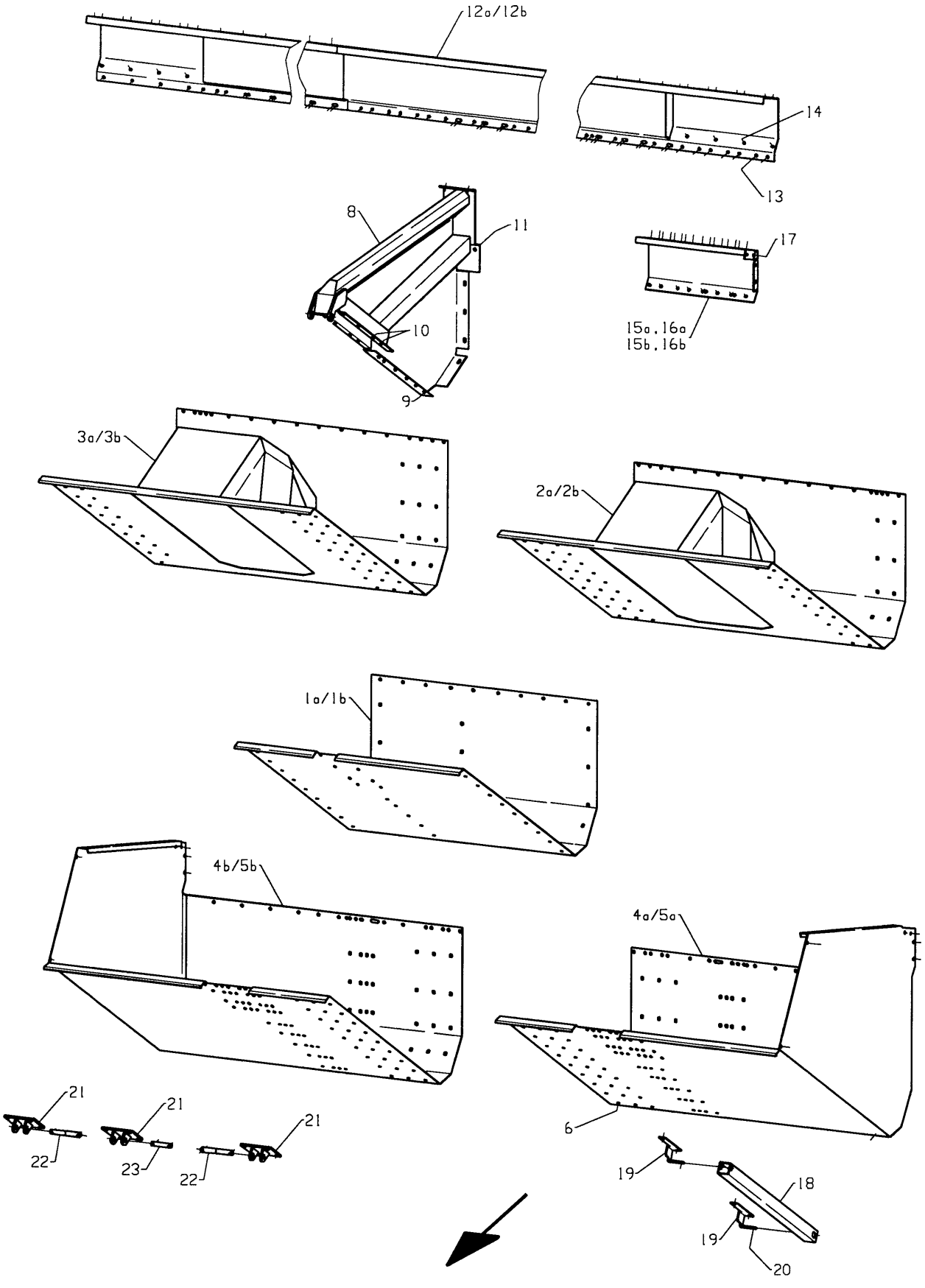
12a/12b
14
13
8
11
10
9
17
15a, 16a
15b, 16b
3a/3b
2a/2b
1a/1b
4b/5b
4a/5a
6
21
22
23
19
18
20

Fig. 13

Utgave: / Issue:	1	Redskap: / Implement:	POTETSETTER SLEPT 6-RADS / POTATO PLANTER TRAILED 6-ROWS	3300 / 3300	Kverneland
Dato: / Date:	95-03	Enhet / Unit	TANK BAKRE DEL / HOPPER REAR SECTION		Fig nr.: 13

Ref. No.	Delenr. Part no.	Ant. Qty.	Gjenstand	Description	Anmerkning Note
1a	214062	1	TANKPLATE MIDT	TANK PLATE CENTRE	3336-3340
1b	214757	1	TANKPLATE MIDT	TANK PLATE CENTRE	3375-3385
2a	214500	1	MELLOMPLATE SV. V.	INTERMEDIATE PLATE LH	3336-3340
3a	214501	1	MELLOMPLATE SV. H.	INTERMEDIATE PALTE RH	"
2b	214760	1	MELLOMPLATE SV. V.	INTERMEDIATE PLATE LH	3375-3385
3b	214761	1	MELLOMPLATE SV. H.	INTERMEDIATE PLATE RH	"
4a	214622	1	TANKSIDE SV. V.	TANK SIDE LH	3336-3340
5a	214623	1	TANKSIDE SV. H.	TANK SIDE RH	"
4b	214752	1	TANKSIDE SV. V.	TANK SIDE LH	3375-3385
5b	214753	1	TANKSIDE SV. H.	TANK SIDE RH	"
6	821520	52	LÅSESKRUE M10X20-4.6 ELZN.	CARRIAGE BOLT M10X20-4.6 GALV	
6	852160	52	NYLOCKMUTTER M10 ELZN.	NYLOCK NUT M10 GALV.	
6	231500	52	BRIKKE Ø13.5-Ø25X5	WASHER Ø13.5-Ø25X5	
7	821525	8	LÅSESKRUE M10X25-4.6 ELZN.	CARRIAGE BOLT M10X25-4.6 GALV.	
7	852160	8	NYLOCKMUTTER M10 ELZN.	NYLOCK NUT M10 GALV.	
7	231500	8	BRIKKE Ø13.5-Ø25X5	WASHER Ø13.5-Ø25X5	
8	214454	3	TANKAVSTIVER SV.	TANK REINFORCEMENT	
9	821520	30	LÅSESKRUE M10X20-4.6 ELZN.	CARRIAGE BOLT M10X20-4.6 GALV	
9	852160	30	NYLOCKMUTTER M10 ELZN.	NYLOCK NUT M10 GALV.	
9	231500	30	BRIKKE Ø13.5-Ø25X5	WASHER Ø13.5-Ø25X5	
10	813625	12	SEKSKANTSKRUE M12X25-8.8 ELZN	HEX. BOLT M12X25-8.8 GALV	
10	852162	12	NYLOCKMUTTER M12 ELZN.	NYLOCK NUT M12 GALV	
10	860163	12	BRIKKE Ø13-Ø24X2.5 ELZN	WASHER Ø13-Ø24X2.5	
11	813635	12	SEKSKANTSKRUE M12X35-8.8 ELZN	HEX. BOLT M12X35-8.8 GALV	
11	852162	12	NYLOCKMUTTER M12 ELZN.	NYLOCK NUT M12 GALV	
11	860163	12	BRIKKE Ø13-Ø24X2.5 ELZN	WASHER Ø13-Ø24X2.5	
12a	214040	1	TANKKANAL SV.	TANK BRACKET	3336-3340
12b	214765	1	TANKKANAL SV.	TANK BRACKET	3375-3385
13	813625	37	SEKSKANTSKRUE M12X25-8.8 ELZN	HEX. BOLT M12X25-8.8 GALV	
13	852162	37	NYLOCKMUTTER M12 ELZN.	NYLOCK NUT M12 GALV	
13	860163	37	BRIKKE Ø13-Ø24X2.5 ELZN	WASHER Ø13-Ø24X2.5	
14	813630	12	SEKSKANTSKRUE M12X30-8.8 ELZN	HEX. BOLT M12X30-8.8 GALV.	
14	852162	12	NYLOCKMUTTER M12 ELZN.	NYLOCK NUT M12 GALV	
14	860163	12	BRIKKE Ø13-Ø24X2.5 ELZN	WASHER Ø13-Ø24X2.5	
15a	214046	1	YTTERPROFIL V.	OUTER PROFILE LH	3336-3340
16a	214047	1	YTTERPROFIL H.	OUTER PROFILE RH	"
15b	214769	1	YTTERPROFIL V.	OUTER PROFILE LH	3375-3385
16b	214770	1	YTTERPROFIL H.	OUTER PROFILE RH	"
17	821520	8	LÅSESKRUE M10X20-4.6 ELZN.	CARRIAGE BOLT M10X20-4.6 GALV	
17	852160	8	NYLOCKMUTTER M10 ELZN.	NYLOCK NUT M10 GALV.	
17	860160	8	BRIKKE Ø10.5-Ø21X2 ELZN	WASHER Ø10.5-Ø21X2	
18	214627	2	LåSESTAG	STAY	
19	214636	4	LåSESTAGHOLDER	BRACEKT	
20	867056	4	RINGPINNE Ø6 ELZN	RING PIN 6 GALV	
21	214306	3	BRAKETT SV.	BRACEKT	
22	214625	2	BOLT Ø22-Ø8.4/143/12	BOLT Ø22-Ø8.4/143/12	
23	214628	1	BOLT Ø20-Ø8.4/69/Ø8.4	BOLT Ø20-Ø8.4/69/Ø8.4	
24	865440	4	SPLINT 8X40 GALV.	SPLIT PIN 8X40 GALV.	

Kverneland

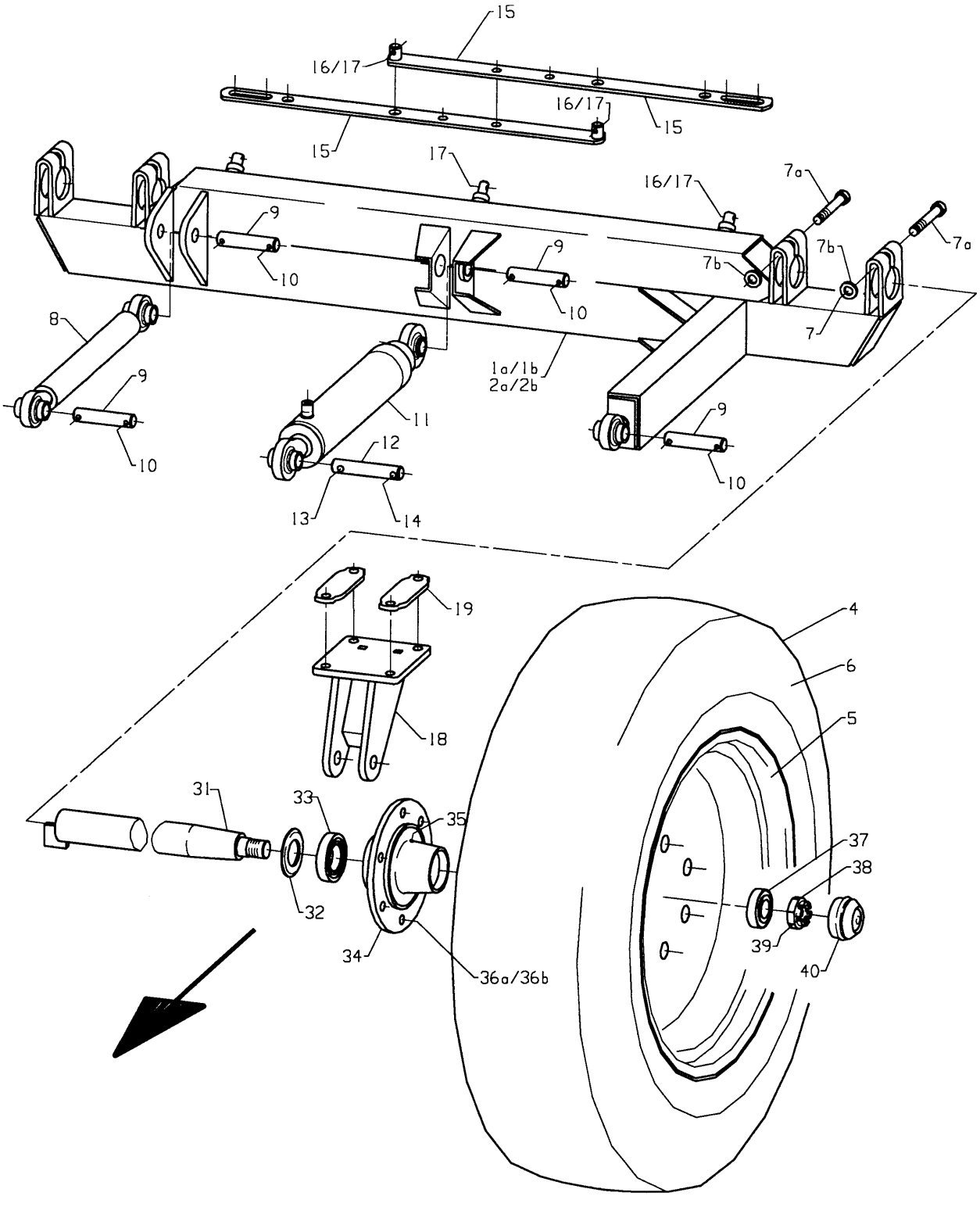

Fig. 14

Utgave: / Issue:	1	Redskap: / Implement:	POTETSETTER SLEPT 6-RADS / POTATO PLANTER TRAILED 6-ROWS	3300 / 3300	Kverneland
Dato: / Date:	95-03	Enhet / Unit	BÆREHJUL / LAND WHEELS		Fig nr.: 14

Ref. No.	Delenr. Part no.	Ant. Qty.	Gjenstand	Description	Anmerkning Note
1a-40	**214010**	**1**	**HJULOPPHENG KOMPL. V.**	**WHEEL SUSPENSION ASSY LH**	
1b-40	**214009**	**1**	**HJULOPPHENG KOMPL. H.**	**WHEEL SUSPENSION ASSY RH**	
1a	214012	1	HJULOPPHENG V. SV.	WHEEL SUSPENSION LH	
1b	214011	1	HJULOPPHENG H. SV.	WHEEL SUSPENSION RH	
2a-40	**214439**	**1**	**HJULOPPHENG KOMPL. V.**	**WHEEL SUSPENSION ASSY LH**	
2b-40	**214440**	**1**	**HJULOPPHENG KOMPL. H.**	**WHEEL SUSPENSION ASSY RH**	
2a	214441	1	HJULOPPHENG SV. V.	WHEEL SUSPENSION LH	
2b	214442	1	HJULOPPHENG SV. H.	WHEEL SUSPENSION RH	
4a-6	**217620**	**1**	**HJUL 11.2-24 8 LAG V. M/RIBBER**	**WHEEL W/RIM 11.2-24 LUGGED L.**	
4b-6	**217621**	**1**	**HJUL 11.2-24 8 LAG H. M/RIBBER**	**WHEEL W/RIM 11.2-24 LUGGED R.**	
4	217622	1	DEKK 11.2-24 8 LAG M/RIBBER	TYRE 11.2-24 LUGGED	
5	217624	1	FELG W10X24	RIM W10X24	
6	310098	1	SLANGE 12.4X24	TUBE 12.4X24	
7a	813903	4	SEKSKANTSKRUE M16X130-8.8 ELZN	HEX. BOLT M16x130-8.8 GALV.	
7b	281415	8	BRIKKE Ø17-Ø32X6	WASHER Ø17-Ø32X6	
7	850166	4	SEKSKANTMUTTER M16-8 ELZN.	HEX. NUT M16 GALV	
8	214007	1	BÆREAKSEL SV.	SUPPORTING AXLE	
9	306883	4	BOLT Ø25-Ø8.4/88/Ø8.4	BOLT Ø25-Ø8.4/88/Ø8.4	
10	865440	8	SPLINT 8X40 GALV.	SPLIT PIN 8X40 GALV.	
11	214250	1	SYLINDER EV ø70/ø70X630+250	CYLINDER EV ø70/ø70X630+250	
12	219821	1	BOLT Ø25-Ø12/105/Ø12	DRAWBAR CONNECTION BOLT	
13	866645	1	SPENNHYLSE 12X45	LOCK PIN 12X45	
14	867061	1	RINGPINNE Ø12 (7/16") ELZN	RING PIN 12 (7/16") GALV.	
15	214586	2	STAG SV.	STAY	
16	860170	2	BRIKKE Ø21-Ø37X3 ELZN	WASHER Ø21-Ø37X3	
17	867056	4	RINGPINNE Ø6 ELZN	RING PIN 6 GALV	
18	214002	2	KLAVE SV.	CLAMP	
19	215005	4	KLAMMER	CLAMP	
20	813906	8	SEKSKANTSKRUE M16X160-8.8 ELZN	HEX. BOLT M16X160-8.8 GALV.	
20	860166	8	BRIKKE Ø17-Ø30X3 ELZN	WASHER Ø17-Ø30X3	
20	852166	8	NYLOCKMUTTER M16 ELZN.	NYLOCK NUT M16 GALV	
30	**401013**	**2**	**AKSEL LANG M/NAV F.A.D.**	**LONG SHAFT W/HUB F.A.D.**	
31	401016	1	AKSEL LANG SVEISET F.A.D.	LONG SHAFT	
32	401023	1	TETNINGSBRIKKE F.A.D.	SEAL	
33	401021	1	LAGER,INDRE F.A.D. SKF 30210	BEARING	
34	401020	1	NAVHUS F.A.D.	HUB	
35	873540	1	SMØRENIPPEL M6 RETT	GREASE NIPPLE M6	
36a	401026	6	RILLEBOLT F.A.D. 18X1.5X49	WHEEL BOLT F.A.D. M18X1,5X49	
36b	401027	6	HJULMUTTER M18X1.5 M.R16KULE	WHEEL NUT F.A.D. M18X1.5	
37	401022	1	LAGER,YTRE F.A.D. SKF 30207	BEARING	
38	401024	1	KRONEMUTTER F.A.D. M33X2	NUT M33X2	
39	401043	1	SPLINT 5X50MM	SPLIT PIN 5X50	
40	401025	1	NAVKAPSEL F.A.D.	HUB CUP F.A.D.	

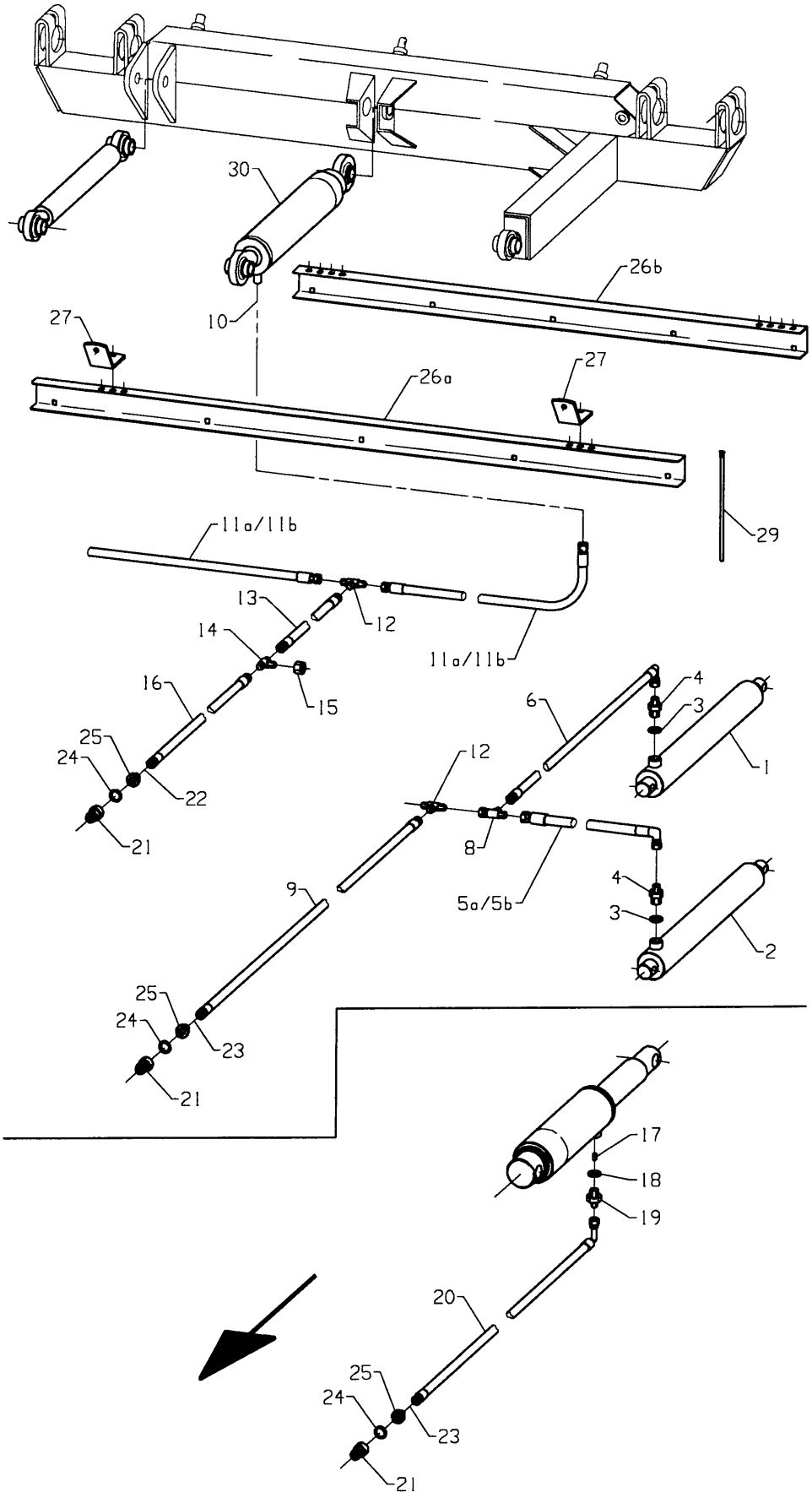
30
10
26b
27
26a
27
29
11a/11b
13
12
14
11a/11b
16
15
6
4
3
1
25
24
22
12
21
8
5a/5b
4
3
2
9
25
24
23
21
17
18
19
20
25
24
23
21

Fig. 15

Utgave: / Issue: 1	Redskap: / Implement: POTETSETTER SLEPT 6-RADS / POTATO PLANTER TRAILED 6-ROWS	3300	Kverneland
Dato: / Date: 95-03	Enhet / Unit HYDRAULIKKANLEGG / HYDRAULICS		Fig nr.: 15

Ref. No.	Delenr. Part no.	Ant. Qty.	Gjenstand	Description	Anmerkning Note
1	217134	1	SYLINDER EV Ø60/Ø60X680+500	CYLINDER SA Ø60/Ø60X680+500	
*	217133		SYLINDERPAKNINGGSETT Ø60/Ø60	CYLINDER SEAL KIT Ø60/Ø60	
2	217135	2	SYLINDER EV Ø50/Ø50X680+500	CYLINDER SA Ø50/Ø50X680+500	
*	219581		SYLINDERPAKNINGSSETT Ø50/Ø50	CYLINDER SEAL KIT Ø50/Ø50	
3	219669	3	PAKNINGSRING 1/2" BOND SEAL	SEAL 1/2" PP 45-D	
4	410747	3	ANSATS 3/8"-1/2" BSP UU	MALE ADAPTOR 3/8"-1/2"	
5a	214677	2	HYD.SL.3/8"2500 I06I06-90GALBU	HYDR. HOSE 3/8" 2500	3336-3340
5b	214687	2	HYD.SL.3/8"2400 I06I06-90GALBU	HYDR. HOSE 3/8" 2400	3375-3385
6	214678	1	HYD.SL.3/8"750 I06I06-90G ALBU	HYDR. HOSE 3/8" 750	
7	410784	1	T-KOPLING 3/8" BSP UUU	T. CONNECTION 3/8" BSP	
8	411885	1	T-KOPLING 3/8" BSP UIU	T-COUPLING 3/8" BSP	
9	214675	1	HYD.SL.3/8" 5500 I06I06-0G	HYDR. HOSE 3/8" 5500	
10	300953	2	STRUPENIPPEL Ø1 KVK	RESTRICTOR M8 Ø1	
11a	214679	2	HYD.SL.3/8" 2250 I06I06-0G	HYDR. HOSE 3/8" 2250	3336-3340
11b	214688	2	HYD.SL.3/8" 2150 I06I06-0G	HYDR. HOSE 3/8" 2150	3375-3385
12	410784	1	T-KOPLING 3/8" BSP UUU	T. CONNECTION 3/8" BSP	
13	430820	1	HYD.SL.3/8" 1530 I06I06-0G	HYDR.HOSE 3/8" 1530 II0DEG.	
14	410784	1	T-KOPLING 3/8" BSP UUU	T. CONNECTION 3/8" BSP	
15	217652	1	HETTE R3/8" INNV. GJ.	CAP R3/8"	
16	214676	1	HYD.SL.3/8" 4000 I06I06-0G	HYDR. HOSE 3/8" 4000	
17	300953	1	STRUPENIPPEL Ø1 KVK	RESTRICTOR M8 Ø1	
18	219669	1	PAKNINGSRING 1/2" BOND SEAL	SEAL 1/2" PP 45-D	
19	410735	1	ANS.1/2"-3/8"BSP UU STRUP KVK	ADAPTOR 1/2"-3/8" 60 DEG.	
20	214671	1	HYD.SL.3/8" 3800 I06I06-90G	HYDR. HOSE 3/8" 3800	
21	410755	3	HURTIGKOPLING 1/2" MALE	QUICK COUPLING 1/2" MALE	
22	410723	1	STØVBESKYTTER GUL	DUST CAP YELLOW	
23	410724	2	STØVBESKYTTER BLÅ	DUST CAP BLUE	
24	219669	3	PAKNINGSRING 1/2" BOND SEAL	SEAL 1/2" PP 45-D	
25	410747	3	ANSATS 3/8"-1/2" BSP UU	MALE ADAPTOR 3/8"-1/2"	
26a	214690	2	SLANGEFØRINGSPROFIL MIDTRE US	CENTRE HOSE GUIDING PROFILE US	3336-3340
26b	214691	2	SLANGEFØRINGSPROFIL MIDTRE EU	CENTRE HOSE GUIDING PROFILE EU	3375-3385
27	214696	4	SLANGEFØRINGSFESTE	HOSE GUIDING BRACKET	
28	821525	4	LÅSESKRUE M10X25-4.6 ELZN.	CARRIAGE BOLT M10X25-4.6 GALV.	
28	860160	4	BRIKKE Ø10.5-Ø21X2 ELZN	WASHER Ø10.5-Ø21X2	
28	852160	4	NYLOCKMUTTER M10 ELZN.	NYLOCK NUT M10 GALV.	
29	257772	10	BUNTEBAND 7X250	STRAP 7X250	
30	214250	1	SYLINDER EV ø70/ø70X630+250	CYLINDER EV ø70/ø70X630+250	
*	219583		SYLINDERPAKNINGSSETT Ø70/Ø70	CYLINDER SEAL KIT Ø70/Ø70	

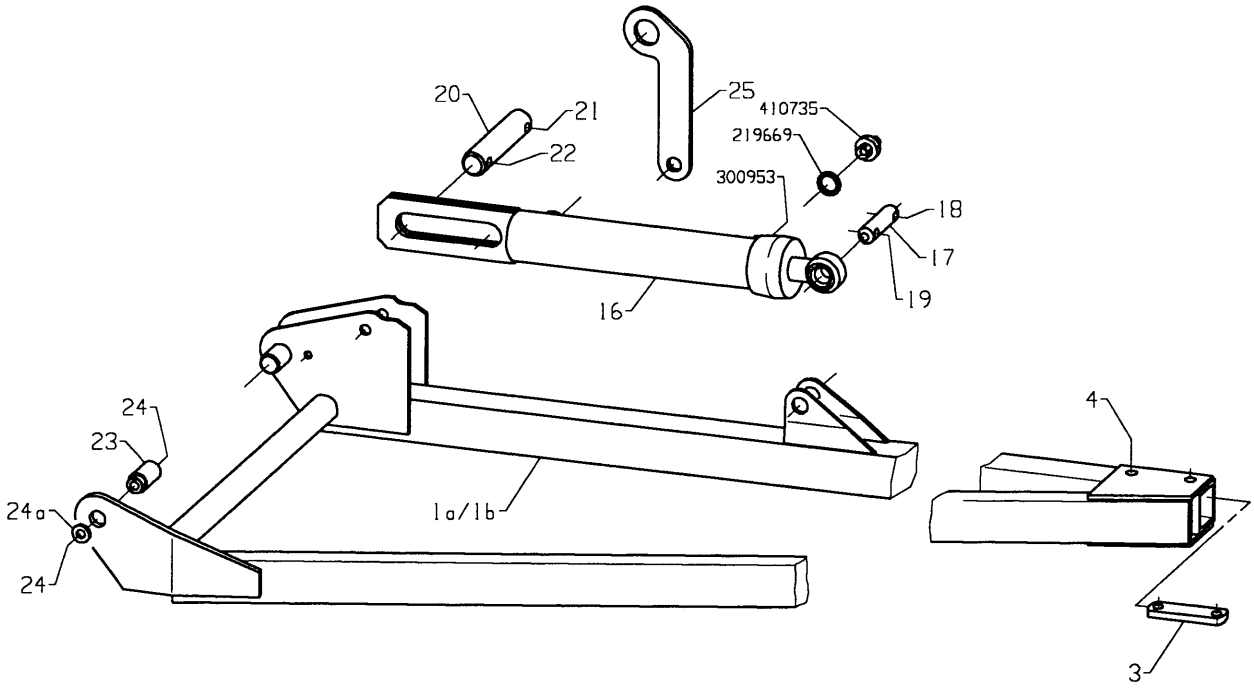
20
21
22
25
410735
219669
300953
18
17
19
16
24
23
24a
24
1a/1b
4
3

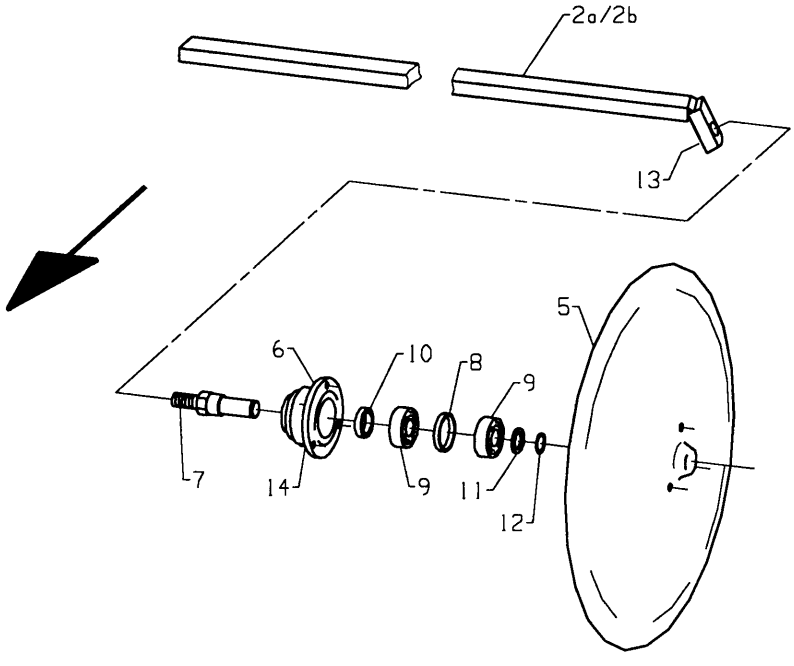
2a/2b
13
5
6
10
8
9
7
14
9
11
12

Fig. 16

Utgave: / Issue:	1	Redskap: / Implement:	POTETSETTER SLEPT 6-RADS / POTATO PLANTER TRAILED 6-ROWS	3300 / 3300	Kverneland
Dato: / Date:	95-03	Enhet / Unit	SPORMARKØRER / TRACK MARKERS		Fig nr.: 16

Ref. No.	Delenr. Part no.	Ant. Qty.	Gjenstand	Description	Anmerkning Note
1a-26	**214420**	**1**	**MARKØR KOMPL. V.**	**MARKER ASSY LH**	
1b-26	**214421**	**1**	**MARKØR KOMPL. H.**	**MARKER ASSY RH**	
1a	214422	1	MARKØR SV. V.	MARKER LH	
1b	214423	1	MARKØR SV. H.	MARKER RH	
2a	214435	1	STANG SV. V.	STAY LH	
2b	214436	1	STANG SV. H.	STAY RH	
3	255889	1	LASK 32X8-M12/70/M12	CLAMP 32X10-M12/70/M12	
4	813640	2	SEKSKANTSKRUE M12X40-8.8 ELZN	HEX. BOLT M12X40-8.8 GALV	
5-15	**271248**	**1**	**RULLESKJÆR 450 M/KULELAGER KPL**	**DISC ROLLER 450 ASSY.**	
5	271250	1	RULLESKJÆRPLATE 450	DISC 450	
6-15	**271252**	**1**	**KULELAGERBOSS M16 AKSEL**	**BALL BEARING BOSS M16 SHAFT**	
6	271253	1	BOSS	BOSS	
7	271254	1	AKSEL	SHAFT	
8	271255	1	AVSTANDSRING	SPACER	
9	870720	2	KULELAGER 6204	BALL BEARING 6204	
10	871254	1	TETNINGSRING 2535/7	OIL SEAL 25357	
11	868604	1	STØTTERING 20X28X2	SUPPORT RING 20X28X2.0	
12	868420	1	LÅSERING UTV. A20X1.2	CIRCLIP A20X1.2	
13	850166	1	SEKSKANTMUTTER M16-8 ELZN.	HEX. NUT M16 GALV	
14	873540	1	SMØRENIPPEL M6 RETT	GREASE NIPPLE M6	
15	813416	3	SEKSKANTSKRUE M8X16-8.8 ELZN	HEX. BOLT M8X16-8.8 GALV.	
16	300819	1	SYLINDER DV Ø50/28X400+215	CYLINDER DA Ø50/28X400+215	
*	300828		SYLINDERPAKNINGSSETT Ø50/Ø28	CYLINDER SEAL KIT Ø50/Ø28	
17	410213	1	BOLT Ø20-Ø12/60/Ø12	PIN Ø20-Ø12/60/Ø12	
18	867061	1	RINGPINNE Ø12 (7/16") ELZN	RING PIN 12 (7/16") GALV.	
19	866645	1	SPENNHYLSE 12X45	LOCK PIN 12X45	
20	214434	1	BOLT ø30-ø12/125/ø12	BOLT Ø30-Ø12/125/12	
21	867061	1	RINGPINNE Ø12 (7/16") ELZN	RING PIN 12 (7/16") GALV.	
22	866645	1	SPENNHYLSE 12X45	LOCK PIN 12X45	
23	214448	1	BØSSING Ø10.2X54-Ø20/11	BUSHING Ø10.2X54-Ø20/11	
24	813580	1	SEKSKANTSKRUE M10X80-8.8 ELZN	HEX. BOLT M10X80-8.8 GALV.	
24a	231499	1	BRIKKE Ø11-Ø22X5	WASHER Ø11-Ø22X5	
24	852160	1	NYLOCKMUTTER M10 ELZN.	NYLOCK NUT M10 GALV.	
25	214447	1	LÅSESTAG	STAY	
26	867056	1	RINGPINNE Ø6 ELZN	RING PIN 6 GALV	

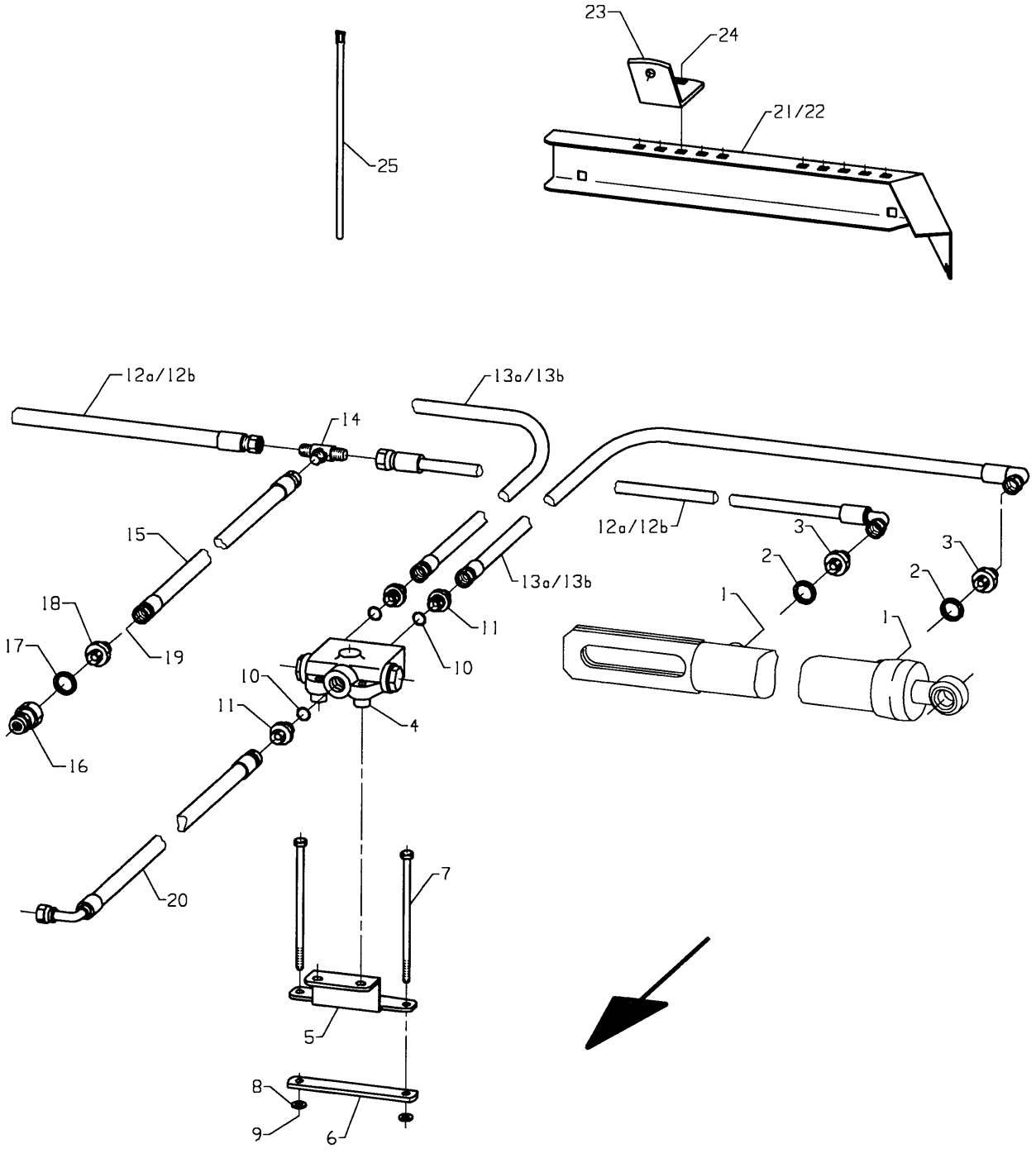

Fig. 17

Utgave: / Issue: 1	Redskap: / Implement: POTETSETTER SLEPT 6-RADS / POTATO PLANTER TRAILED 6-ROWS	3300	Kverneland
Dato: / Date: 95-03	Enhet / Unit HYDRAULIKK FOR MARKØRER / HYDRAULICS FOR MARKERS		Fig nr.: 17

Ref. No.	Delenr. Part no.	Ant. Qty.	Gjenstand	Description	Anmerkning Note
1	300953	4	STRUPENIPPEL Ø1 KVK	RESTRICTOR M8 Ø1	
2	219669	4	PAKNINGSRING 1/2" BOND SEAL	SEAL 1/2" PP 45-D	
3	410735	4	ANS.1/2"-3/8"BSP UU STRUP KVK	ADAPTOR 1/2"-3/8" 60 DEG.	
4	217995	1	SEKVENSVENTIL 2 POS. 3 VEIS	SEQUENTIAL VALVE	
5	214656	1	VENTILFESTE	BRACKET	
6	214657	1	LASK 25X5-4KT9/130/4KT9	CLAMP	
7	813505	2	SEKSKANTSKRUE M8X150-8.8 ELZN	HEX. BOLT M8X150-8.8 GALV.	
8	860158	4	BRIKKE Ø8.4-17X1.6 ELZN	WASHER Ø8.4-Ø17X1.6	
9	852158	2	NYLOCKMUTTER M8 ELZN.	NYLOCK NUT M8 GALV.	
10	872015	3	O-RING 15.30X2.40	O-RING 15.30X2.40	
11	217996	3	ANSATS 3/8"-3/4" BSP/SAE UU	NIPPLE R3/8"-3/5"UNF(SAE)	
12a	214680	2	HYD.SL.1/4" 3550 I06I06-90G	HYDR. HOSE 1/4" 3550	3336-3340
12b	214673	2	HYD.SL.1/4" 3150 I06I06-90G	HYDR. HOSE 1/4" 3150	3375-3385
13a	218010	2	HYD.SL.1/4"3950 I06I06-90GALBU	HYDR. HOSE 1/4" 3900	3336-3340
13b	214674	2	HYD.SL.1/4" 3550 I06I06-90G	HYDR. HOSE 1/4" 3550	3375-3385
14	410784	1	T-KOPLING 3/8" BSP UUU	T. CONNECTION 3/8" BSP	
15	214670	1	HYD.SL.3/8" 5150 I06I06-0G	HYDR. HOSE 3/8" 5150	
16	410755	1	HURTIGKOPLING 1/2" MALE	QUICK COUPLING 1/2" MALE	
17	219669	1	PAKNINGSRING 1/2" BOND SEAL	SEAL 1/2" PP 45-D	
18	410747	1	ANSATS 3/8"-1/2" BSP UU	MALE ADAPTOR 3/8"-1/2"	
19	410723	1	STØVBESKYTTER GUL	DUST CAP YELLOW	
20	411884	1	HYD.SL.3/8" 840 I06I06-90G	HYDR. HOSE 3/8" 840	
21	214693	1	SLANGEFØRINGSPROFIL YTRE V.	OUTER HOSE GUIDING PROFILE LH	
22	214694	1	SLANGEFØRINGSPROFIL YTRE H.	OUTER HOSE GUIDING PROFILE RH	
23	214696	4	SLANGEFØRINGSFESTE	HOSE GUIDING BRACKET	
24	821525	4	LÅSESKRUE M10X25-4.6 ELZN.	CARRIAGE BOLT M10X25-4.6 GALV.	
24	860160	4	BRIKKE Ø10.5-Ø21X2 ELZN	WASHER Ø10.5-Ø21X2	
24	852160	4	NYLOCKMUTTER M10 ELZN.	NYLOCK NUT M10 GALV.	
25	257772	8	BUNTEBAND 7X250	STRAP 7X250	

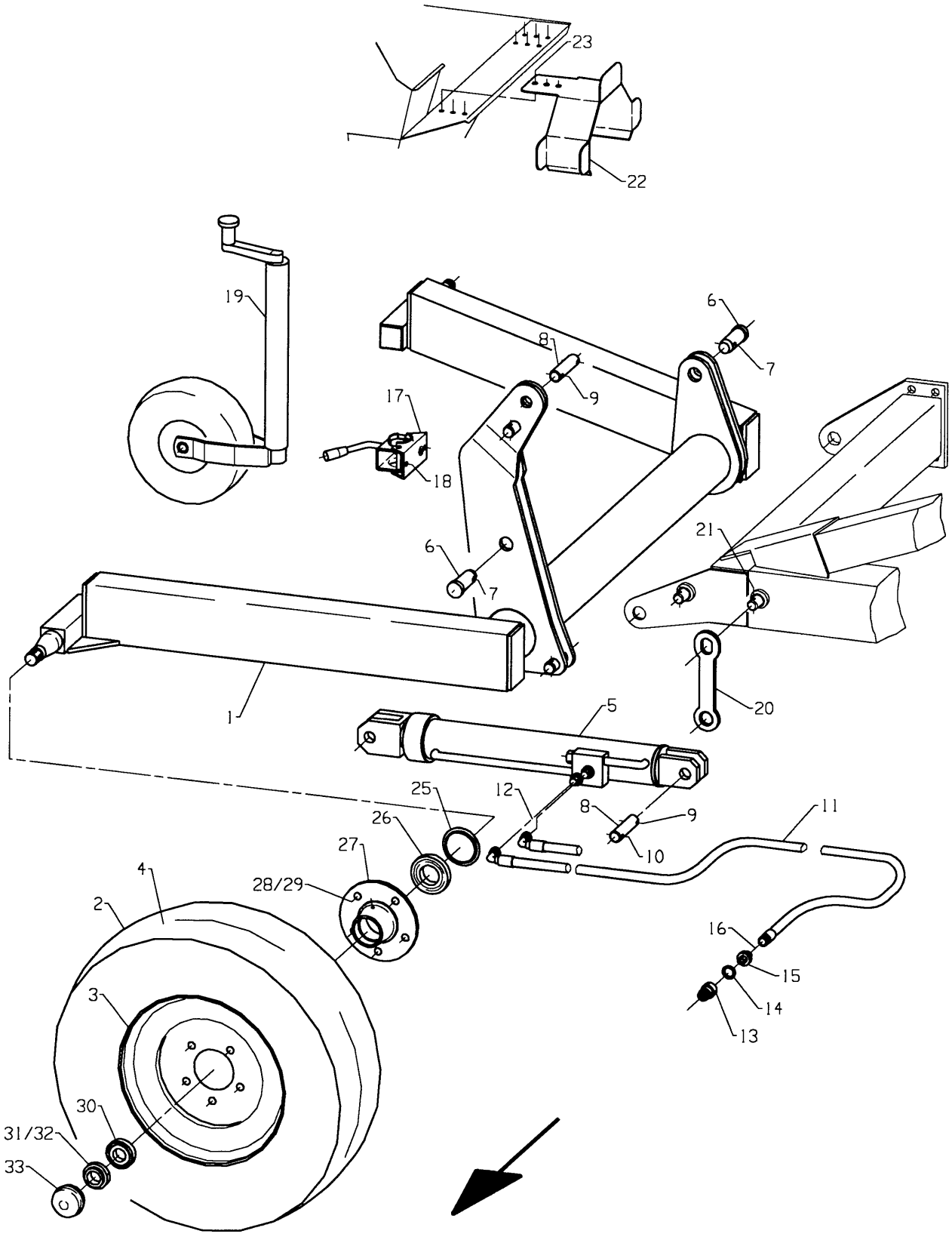
23
22
19
6
8
7
9
17
18
6
7
21
1
20
5
25
12
8
9
11
26
27
10
4
28/29
2
16
15
3
14
13
30
31/32
33

Fig. 18

Utgave: / Issue:	1	Redskap: / Implement:	POTETSETTER SLEPT 6-RADS / POTATO PLANTER TRAILED 6-ROWS	3300 / 3300	Kverneland
Dato: / Date:	95-03	Enhet / Unit	TRANSPORTHJUL / ROAD TRANSPORTING WHEELS		Fig nr.: 18

Ref. No.	Delenr. Part no.	Ant. Qty.	Gjenstand	Description	Anmerkning Note
1	214401	1	TRANSPORTHJULRAMME SV.	TRANSPORT WHEEL FRAME	
2-4	**215696**	**2**	**HJUL 215/75-R14**	**WHEEL 215/75-R14**	
2	215697	2	DEKK 215/75-R14	TYRE 215/75-R14	
3	215698	2	FELG 7JX14	RIM 7JX14	
4	215699	2	SLANGE FOR 215/75-R14	TUBE FOR TYRE 215/75-R14	
5	410708	1	SYLINDER DV Ø75/Ø36X670+400	CYLINDER DV Ø75/Ø36X670+400	
*	411171		SYLINDERPAKNINGSSETT Ø75/Ø36	CYLINDER SEAL KIT Ø75/Ø36	
6	214449	2	BOLT M/HODE Ø30X61	BOLT W/HEAD Ø30X61	
7	867061	2	RINGPINNE Ø12 (7/16") ELZN	RING PIN 12 (7/16") GALV.	
8	306883	2	BOLT Ø25-Ø8.4/88/Ø8.4	BOLT Ø25-Ø8.4/88/Ø8.4	
9	865432	3	SPLINT 8X32 GALV.	SPLIT PIN 8X32 GALV.	
10	867056	1	RINGPINNE Ø6 ELZN	RING PIN 6 GALV	
11	214672	2	HYD.SL.3/8" 10500 I06I06-90G	HYDR. HOSE 3/8" 10500	
12	300953	2	STRUPENIPPEL Ø1 KVK	RESTRICTOR M8 Ø1	
13	410755	2	HURTIGKOPLING 1/2" MALE	QUICK COUPLING 1/2" MALE	
14	219669	2	PAKNINGSRING 1/2" BOND SEAL	SEAL 1/2" PP 45-D	
15	410747	2	ANSATS 3/8"-1/2" BSP UU	MALE ADAPTOR 3/8"-1/2"	
16	410723	2	STØVBESKYTTER GUL	DUST CAP YELLOW	
17	214908	1	NESEHJULKLEMME 49MM	SUPPORT WHEEL BRACKET 49MM	
18	813525	2	SEKSKANTSKRUE M10X25-8.8 ELZN	HEX. BOLT M10X25-8.8 GALV.	
18	860160	2	BRIKKE Ø10.5-Ø21X2 ELZN	WASHER Ø10.5-Ø21X2	
18	852160	2	NYLOCKMUTTER M10 ELZN.	NYLOCK NUT M10 GALV.	
19	214907	1	NESEHJUL 260/85	SUPPORT WHEEL 260/85	
20	213987	1	LåSESTAG	STAY BRACKET	
21	867056	1	RINGPINNE Ø6 ELZN	RING PIN 6 GALV	
22	214698	1	SLANGEOPPHENGSTROMMEL	HOSE SUSPENSION	
23	813520	1	SEKSKANTSKRUE M10X20-8.8 ELZN	HEX. BOLT M10X20-8.8 GALV.	
23	860160	2	BRIKKE Ø10.5-Ø21X2 ELZN	WASHER Ø10.5-Ø21X2	
25	411907	1	TETNINGSRING	SEAL	
26	411905	1	LAGER INDRE 45X85X20,75	INNER BEARING	
27	411904	1	NAV HUS	HUB	
28	411910	1	RILLEBOLT M16X1.5X43	WHEEL BOLT	
29	411911	1	HJULMUTTER M16X1.5	WHEEL NUT	
30	411906	1	LAGER YTRE 30X62X17,25	OUTER BEARING	
31	411908	1	KRONEMUTTER Ø25	NUT	
32	865250	1	SPLINT 4X50 GALV.	SPLIT PIN 4X50 GALV	
33	411909	1	NAVKAPSEL (LIK 410521)	CAP	

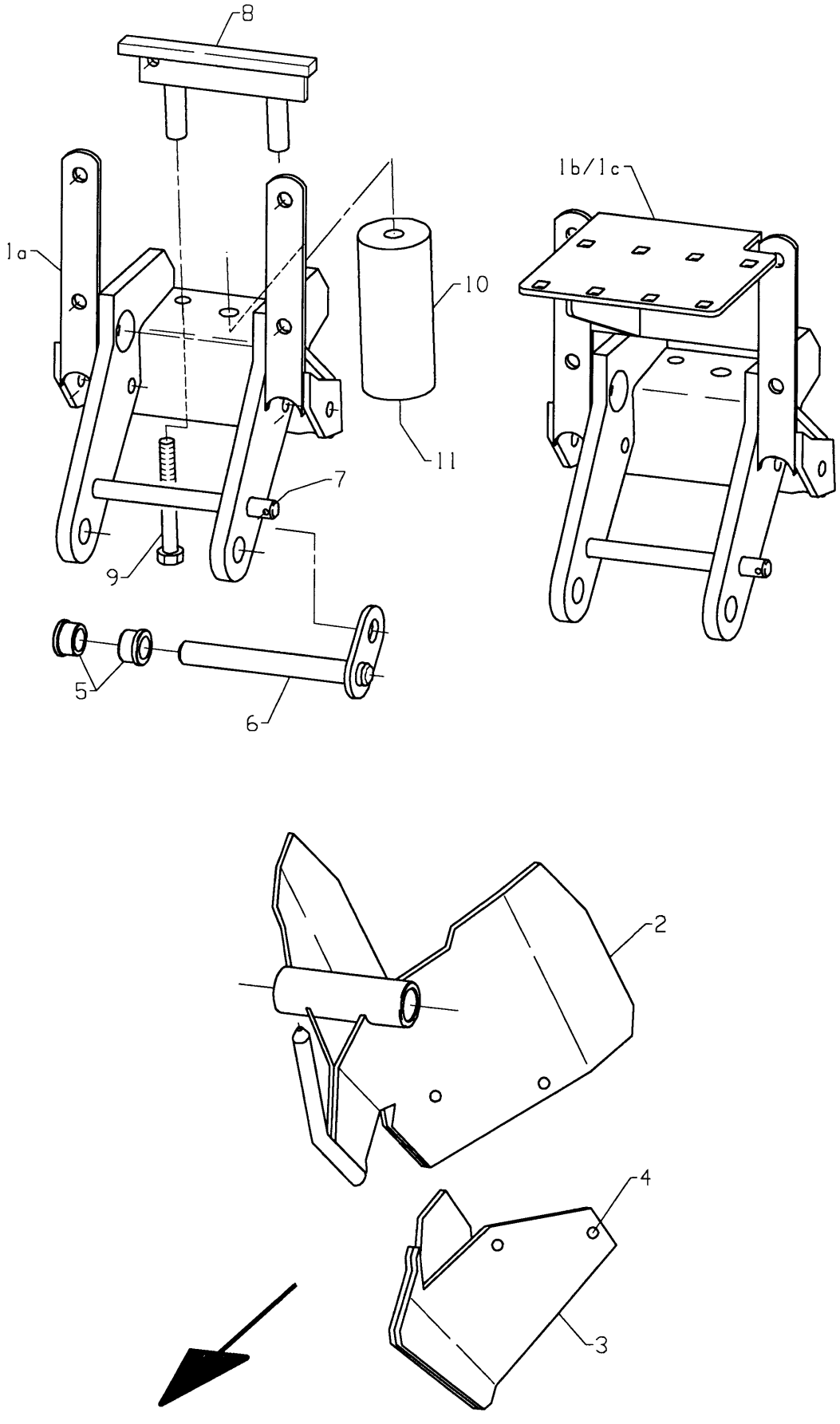

Fig. 19

Utgave: / Issue:	1	Redskap: / Implement:	POTETSETTER SLEPT 6-RADS / POTATO PLANTER TRAILED 6-ROWS	3300 / 3300	Kverneland
Dato: / Date:	95-03	Enhet / Unit	SETTESKJÆR HD M/SJOKKDEMPER / IMPACT FURROW OPENERS		Fig nr.: 19

Ref. No.	Delenr. Part no.	Ant. Qty.	Gjenstand	Description	Anmerkning Note
1a-11	**218050**	**4**	**SETTESKJÆR HD M/SJOKKD. KOMPL.**	**IMPACT FURROW OPENER HD ASSY**	
1b-11	**218078**	**1**	**SETTESKJÆR HD M/FESTE V.KOMPL.**	**IMPACT FURROW OPENER LH ASSY**	
1c-11	**218079**	**1**	**SETTESKJÆR HD M/FESTE H.KOMPL.**	**IMPACT FURROW OPENER RH ASSY**	
1a	218060	1	SKJÆROPPHENG HD SV.	SHARE SUSPENSION STAY	
1b	218080	1	SKJÆROPPHENG HD M/FESTE SV.V.	SHARE SUSP. STAY W/LH BRACKET	
1c	218081	1	SKJÆROPPHENG HD M/FESTE SV.H.	SHARE SUSP. STAY W/RH BRACKET	
2	218052	1	SETTESKJÆRKROPP HD M/SJ.D. SV.	SHARE BODY HD W/SPRING	
3	217626	1	SLITESPISS HD SV.	WEARING SHARE	
4	823525	4	PLOGSKRUE M10X25 8.8 ELZN.	PLOUGH BOLT M10X25 8.8 GALV.	
4	270448	4	BRIKKE Ø11-Ø30X4 GALV	WASHER Ø11-Ø30X4	
4	852160	4	NYLOCKMUTTER M10 ELZN.	NYLOCK NUT M10 GALV.	
5	410389	2	LAGERFORING Ø25X21-Ø35/16	BUSHING Ø25X21-Ø35/16	
6	218065	1	AKSEL Ø25 SV.	SHAFT Ø25	
7	865332	1	SPLINT 6.3X32 GALV.	SPLIT PIN 6,3 X 32	
8	218070	1	OPPHENGSFESTE SV.	SUSPENSION BRACKET	
9	813901	2	SEKSKANTSKRUE M16X110-8.8 ELZN	HEX. BOLT M16X110-8.8 GALV	
9	860166	2	BRIKKE Ø17-Ø30X3 ELZN	WASHER Ø17-Ø30X3	
10	218075	1	FJØRELEMENT Ø80X170 PLAST	SPRING ELEMENT Ø80X170 PLASTIC	
11	814132	1	SEKSKANTSKRUE M20X220-8.8 ELZN	HEX. BOLT M20X220-8.8	
11	852167	1	NYLOCKMUTTER M20 ELZN.	NYLOCK NUT M20 GALV	

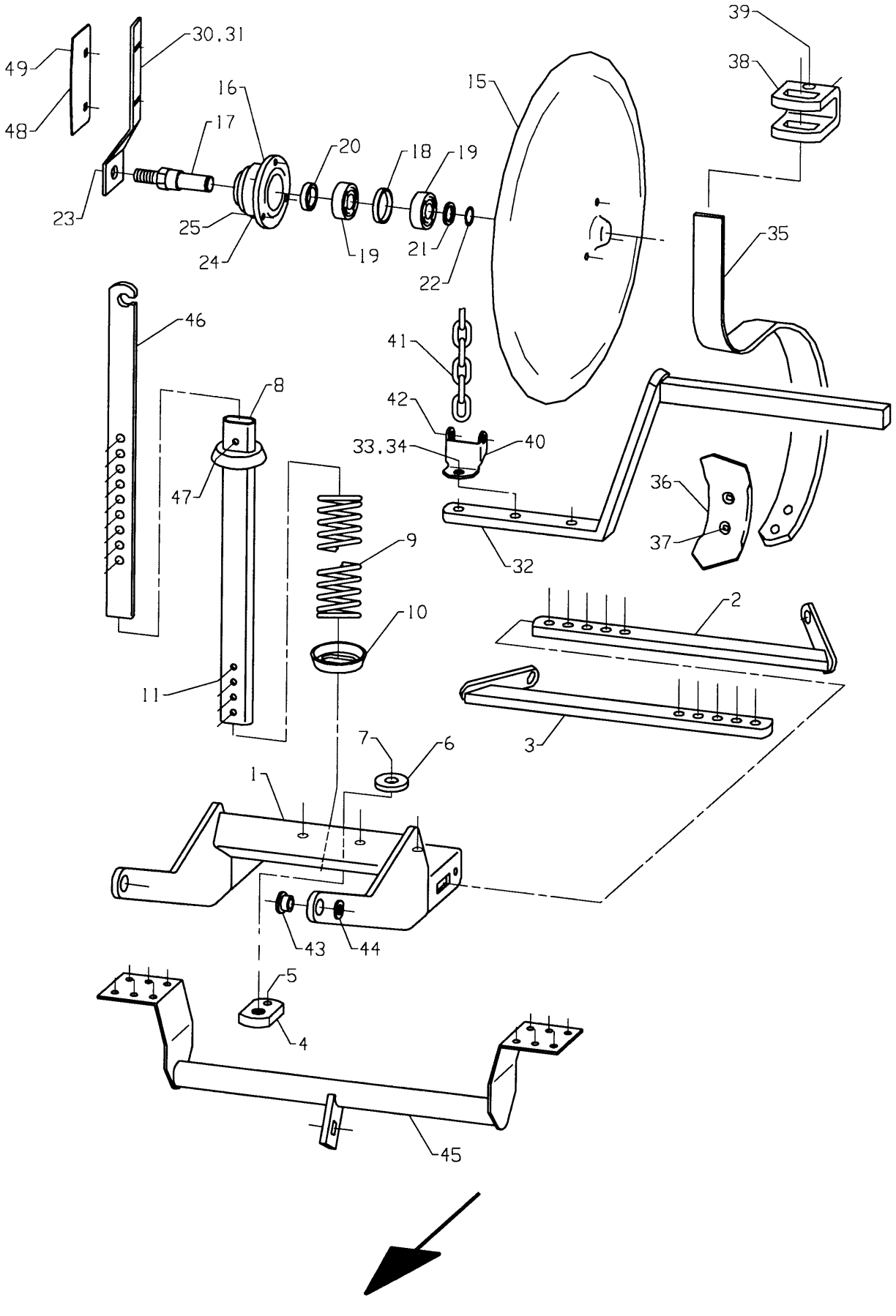
49
48
30.31
16
17
23
25
24
20
18
19
19
21
22
15
39
38
35
46
41
42
33.34
40
8
47
9
10
11
36
37
32
2
3
7
6
1
43
44
5
4
45

Fig. 20

Utgave: / Issue:	1	Redskap: / Implement:	POTETSETTER SLEPT 6-RADS / POTATO PLANTER TRAILED 6-ROWS	3300 / 3300	Kverneland
Dato: / Date:	95-03	Enhet / Unit	RULLESKJÆR / DISC COVERERS		Fig nr.: 20

Ref. No.	Delenr. Part no.	Ant. Qty.	Gjenstand	Description	Anmerkning Note
1-47	**214232**	**6**	**REGULERINGSRAMME KPL.**	**REGULATING FRAME ASSY**	
1	214233	1	RULLESKJÆRRAMME SV..	REGULATING FRAME	
2	214240	1	RULLESKJÆRARM V. SV.	LEFT DISC ROLLER ARM	
3	214241	1	RULLESKJÆRARM H. SV.	RIGHT DISC ROLLER ARM	
4	214245	1	MUTTERBRIKKE M16-Ø10	NUT WASHER	
5	866540	1	SPENNHYLSE 10X40	LOCK PIN 10X40	
6	410334	1	BRIKKE Ø17-Ø43X5 spesial	WASHER Ø17-Ø43X5 special	
7	813850	1	SEKSKANTSKRUE M16X50-8.8 ELZN	HEX. BOLT M16X50-8.8 GALV.	
8	214203	1	REGULERHYLSE SV.	COLLAR REGULATING	
9	223494	1	TRYKKFJØR Ø7-Ø52X370	TENSION SPRING Ø7-Ø52X370	
10	215241	1	SKIVE Ø23X44-Ø60 M/KOPPFORM	WASHER	
11	867086	2	RØRPINNE Ø10X40XØ36	PIN Ø10XØ40XØ36	
15-25	**271248**	**12**	**RULLESKJÆR 450 M/KULELAGER KPL**	**ROLLER DISCS 450 ASSY.**	
15	271250	1	RULLESKJÆRPLATE 450	DISC 450	
16-24	**271252**	**1**	**KULELAGERBOSS M16 AKSEL**	**BALL BEARING BOSS M16 SHAFT**	
16	271253	1	BOSS	BOSS	
17	271254	1	AKSEL	SHAFT	
18	271255	1	AVSTANDSRING	SPACER	
19	870720	2	KULELAGER 6204	BALL BEARING 6204	
20	871254	1	TETNINGSRING 2535/7	OIL SEAL 25357	
21	868604	1	STØTTERING 20X28X2	SUPPORT RING 20X28X2.0	
22	868420	1	LÅSERING UTV. A20X1.2	CIRCLIP A20X1.2	
23	852166	1	NYLOCKMUTTER M16 ELZN.	NYLOCK NUT M16 GALV	
24	873540	1	SMØRENIPPEL M6 RETT	GREASE NIPPLE M6 STRAIGHT	
25	813416	3	SEKSKANTSKRUE M8X16-8.8 ELZN	HEX. BOLT M8X16-8.8 GALV.	
30	214226	6	RULLESKJÆRAVSKRAPER V.	SCRAPER LEFT	
31	214227	6	RULLESKJÆRAVSKRAPER H.	SCRAPER RIGHT	
32	215464	2	FESTESTANG SV.	ATACHING BAR	
33	813640	6	SEKSKANTSKRUE M12X40-8.8 ELZN	HEX. BOLT M12X40-8.8 GALV	
33	860163	12	BRIKKE Ø13-Ø24X2.5 ELZN	WASHER Ø13-Ø24X2.5	
33	852162	6	NYLOCKMUTTER M12 ELZN.	NYLOCK NUT M12 GALV	
34	813625	4	SEKSKANTSKRUE M12X25-8.8 ELZN	HEX. BOLT M12X25-8.8 GALV	
34	852162	4	NYLOCKMUTTER M12 ELZN.	NYLOCK NUT M12 GALV	
35	223190	2	TINDE	TINE	
36	288821	2	SPISS 63	POINT 63MM	
37	823525	4	PLOGSKRUE M10X25 8.8 ELZN.	PLOUGH BOLT M10X25 8.8 GALV.	
37	860160	4	BRIKKE Ø10.5-Ø21X2 ELZN	WASHER Ø10.5-Ø21X2	
37	850160	4	SEKSKANTMUTTER M10-8 ELZN.	HEX. NUT M10-8 GALV.	
38	288776	2	FESTE 25-40 FLATT	TOOLBAR CLAMP 25-38 FLAT	
39	813830	4	SEKSKANTSKRUE M16X30-8.8 ELZN	HEX. BOLT M16X30-8.80 GALV.	
40	217407	6	LØFTEØRE	LIFTING BRACKET	
41	217416	6	KJETTING Ø6.5-24X504	CHAIN 6.5-24X504	
42	867091	6	RØRPINNE Ø10X57X38 M/LÅS	PIN	
43	215198	12	LAGERFORING Ø12.7X15-Ø20/11.5	BEARING LINING Ø12.7X15	
44	860163	12	BRIKKE Ø13-Ø24X2.5 ELZN	WASHER Ø13-Ø24X2.5	
44	813640	12	SEKSKANTSKRUE M12X40-8.8 ELZN	HEX. BOLT M12X40-8.8 GALV	
45	217410	6	FJØRFESTE SV.	SPRING BRACKET	
46	215235	6	REGULERSTANG RULLESKJÆR	REGULATING BAR DISC ROLLER	
47	867086	6	RØRPINNE Ø10X40XØ36	PIN Ø10XØ40XØ36	
48	214229	4	AVSKRAPERPLATE	ATTACHING BAR	EXTRA
49	821416	8	LÅSESKRUE M8X16-4.6 ELZN.	CARRIAGE BOLT M8X16-4.6 GALV.	
49	860158	8	BRIKKE Ø8.4-17X1.6 ELZN	WASHER Ø8.4-Ø17X1.6	
49	850158	8	SEKSKANTMUTTER M8-8 ELZN.	HEX. NUT M8-8 GALV.	

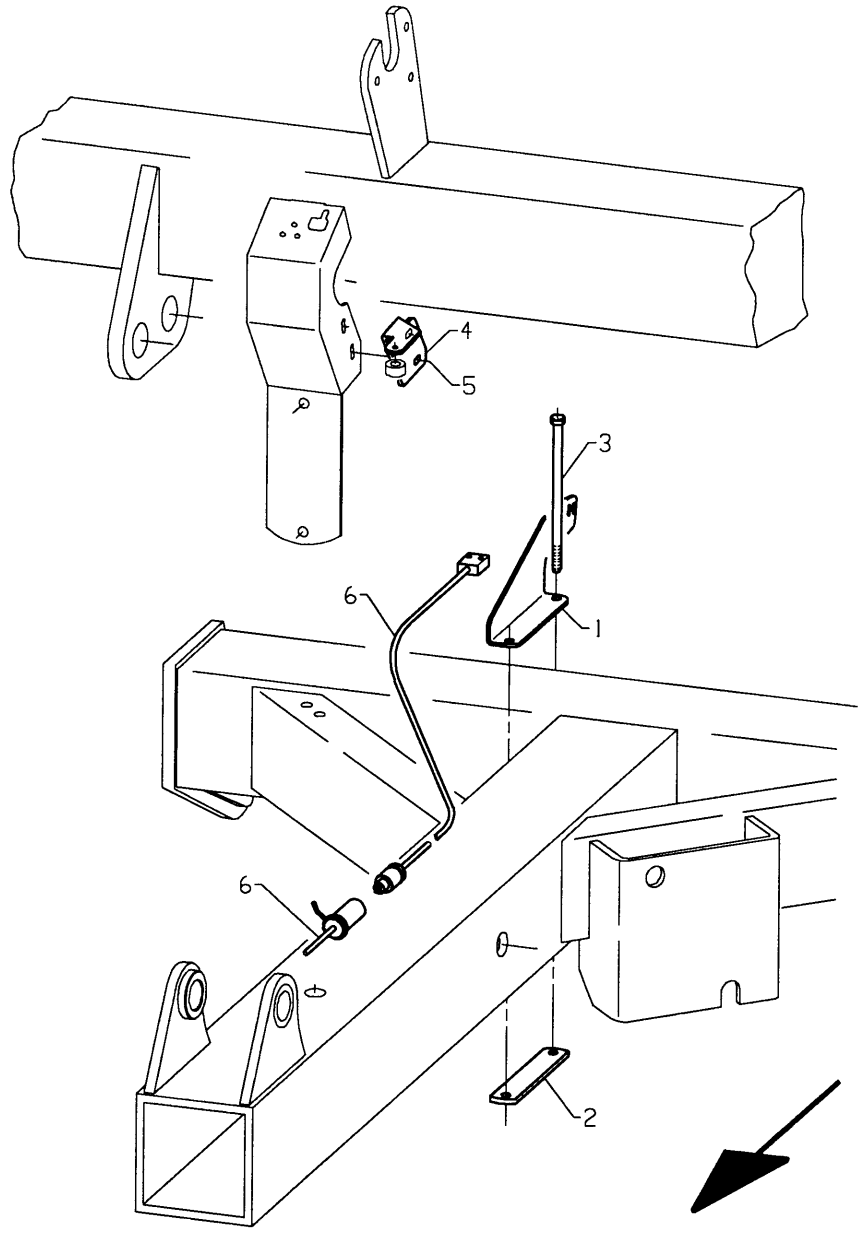

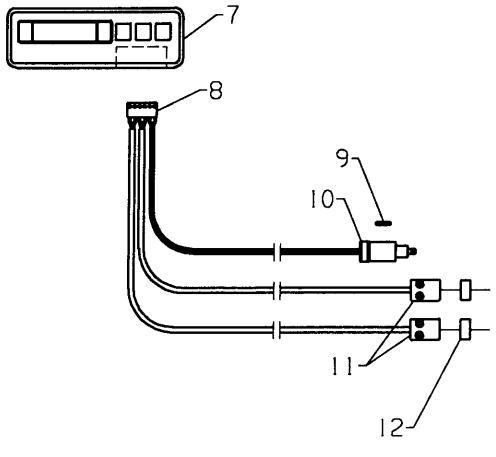

Fig. 21

Utgave: / Issue:	1	Redskap: / Implement:	POTETSETTER SLEPT 6-RADS / POTATO PLANTER TRAILED 6-ROWS	3300 / 3300	Kverneland
Dato: / Date:	95-03	Enhet / Unit	AREAL OG HASTIGHETSMÅLER / AREA AND SPEED METER		Fig nr.: 21

Ref. No.	Delenr. Part no.	Ant. Qty.	Gjenstand	Description	Anmerkning Note
1	216137	1	AVBRUDDSENSORHOLDER 6R	SENSOR BRACKET 6R	
2	214657	1	LASK 25X5-4KT9/130/4KT9	CLAMP	
3	813505	2	SEKSKANTSKRUE M8X150-8.8 ELZN	HEX. BOLT M8X150-8.8 GALV.	
3	860158	4	BRIKKE Ø8.4-17X1.6 ELZN	WASHER Ø8.4-Ø17X1.6	
3	852158	2	NYLOCKMUTTER M8 ELZN.	NYLOCK NUT M8 GALV.	
4	216138	1	MAGNETHOLDER 6R	MAGNET BRACKET 6R	
5	813316	2	SEKSKANTSKRUE M6X16-8.8 ELZN	HEX. BOLT M6X16-8.8 GALV.	
5	860156	4	BRIKKE Ø6.6-Ø12X1.5 ELZN	WASHER Ø6.6-Ø12X1.5	
5	852156	2	NYLOCKMUTTER M6 ELZN.	NYLOCK NUT M6 GALV.	
6	216099	1	EKSTRA AVBRUDDSENSOR F/AREALM.	EXTRA SENSOR FOR ACREAGE METER	
7	216145	1	AREALMÅLER PANEL	ACREAGE METER PANEL	
8	216146	1	6-POLET MULTISTØPSEL	6 PIN SOCKET	
9	216068	1	SIKRING 500mA	FUSE, 500mA	
10	302234	1	STØPSEL	PLUG	
11	216093	2	SENSOR M/5M KABEL	SENSOR W/5M CABLE	
12	216147	2	MAGNET Ø20MMX10X4	MAGNET	

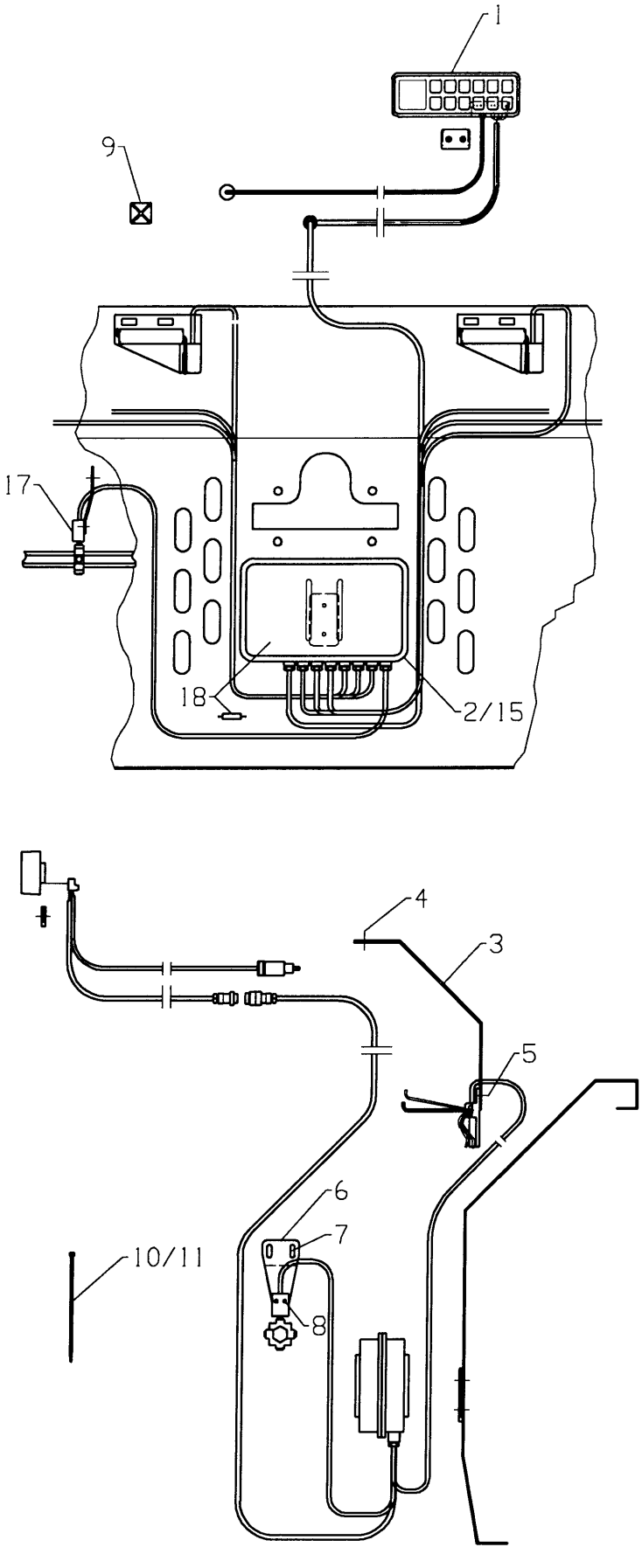

Fig. 22

Utgave: / Issue:	1	Redskap: / Implement:	POTETSETTER SLEPT 6-RADS / POTATO PLANTER TRAILED 6-ROWS	3300 / 3300	Kverneland
Dato: / Date:	95-03	Enhet / Unit	SETTEKONTROLL / PLANTING MONITOR		Fig nr.: 22

Ref. No.	Delenr. Part no.	Ant. Qty.	Gjenstand	Description	Anmerkning Note
1	216151	1	MONITOR MX222	MONITOR MX222	
2	216160	1	COMPUTER M/SENSORER 6-R	COMPUTER M/SENSORER 6-R	
3	216076	6	POTETSENSORHOLDER	POTATO SENSOR HOLDER	
4	821420	12	LÅSESKRUE M8X20-4.6 ELZN.	CARRIAGE BOLT M8X20-4.6 GALV.	
4	860158	12	BRIKKE Ø8.4-17X1.6 ELZN	WASHER Ø8.4-Ø17X1.6	
4	852158	12	NYLOCKMUTTER M8 ELZN.	NYLOCK NUT M8 GALV.	
5	821316	12	LÅSESKRUE M6X16-4.6 ELZN.	CARRIAGE BOLT M6X16-4.6 GALV.	
5	860155	12	BRIKKE Ø6.4-Ø18X1.5 ELZN	WASHER Ø6.6-Ø18X1.5	
5	852156	12	NYLOCKMUTTER M6 ELZN.	NYLOCK NUT M6 GALV.	
6	216063	1	REFERANSESENSORHOLDER	PLASTIC DIE SENSORHOLDER	
7	813320	2	SEKSKANTSKRUE M6X20-8.8 ELZN	HEX. BOLT M6X20-8.8 GALV	
7	860155	2	BRIKKE Ø6.4-Ø18X1.5 ELZN	WASHER Ø6.6-Ø18X1.5	
7	852156	2	NYLOCKMUTTER M6 ELZN.	NYLOCK NUT M6 GALV.	
8	837220	2	SYL.SKRUE M/SPOR M4X20 ELZN.	PAN SCREW M4X20	
8	860150	2	BRIKKE Ø4.3-Ø9X0.8 ELZN	WASHER Ø4.3-Ø9X0.8	
8	850154	2	SEKSKANTMUTTER M4-8 ELZN.	HEX. NUT M4 GALV.	
9	216072	20	KABELBÅNDFESTE SJØLKLEBENDE	FIXING TAPE BRACKET	
10	216071	22	BUNTEBAND 3.5X150	HOSE STIP 3.5X150	
11	257772	4	BUNTEBAND 7X250	STRAP 7X250	
15	216055	1	SETTESENSORER 4-R	PLANTING SENSORS 4-R	
16	216088	1	POTETSENSOR M95 M/KABEL 3.6M	POTATO SENSOR W/CABLE 3.6M	
17	216062	1	REFERANSESENSOR M/KABEL	REFERENCE SENSOR W/CABLE	
18	216068	1	SIKRING 500mA	FUSE, 500mA	

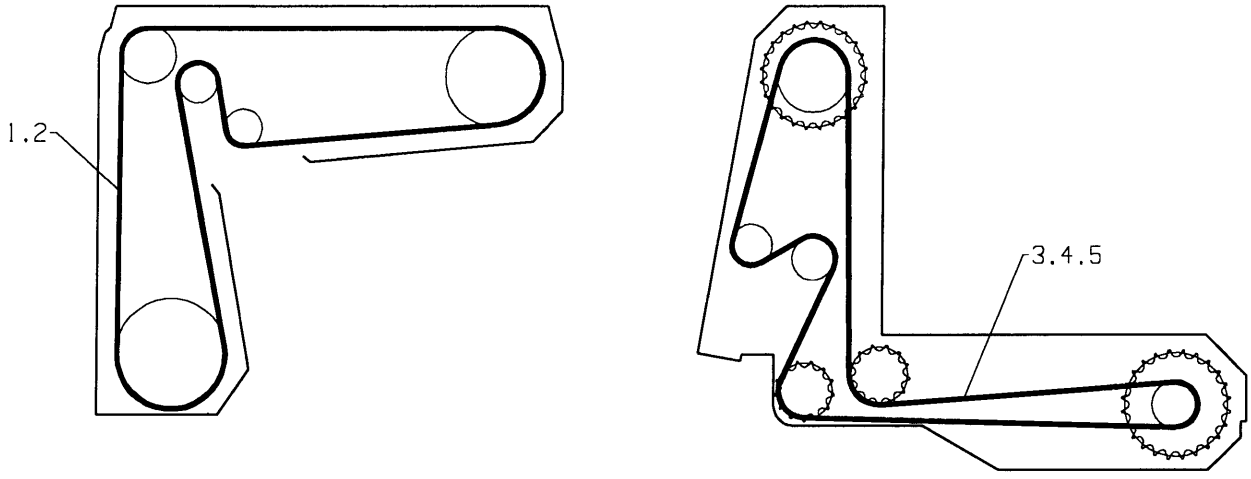

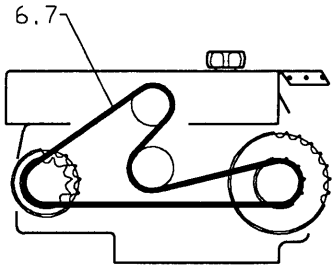

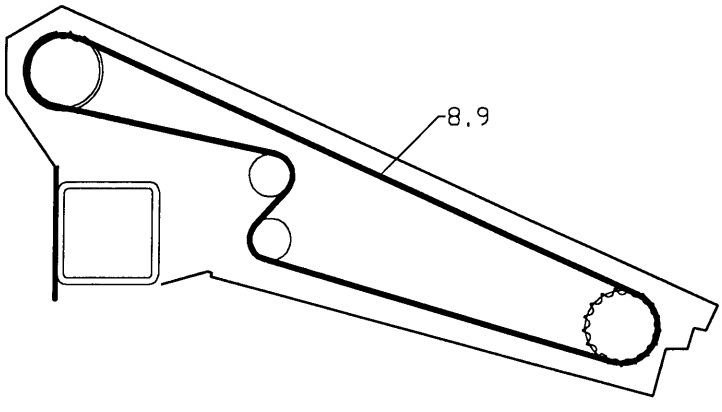

Fig. 23

Utgave: / Issue: 1	Redskap: / Implement: POTETSETTER SLEPT 6-RADS 3300 / POTATO PLANTER TRAILED 6-ROWS 3300	Kverneland
Dato: / Date: 95-03	Enhet / Unit DRIVKJEDER / DRIVE ROLLER CHAINS	Fig nr.: 23

Ref. No.	Delenr. Part no.	Ant. Qty.	Gjenstand	Description	Anmerkning Note
			PRIMÆRDRIFT	**PRIMARY DRIVE**	
1	901649	1	RULLEKJEDE 5/8"X1984	ROLLER CHAIN 5/8"X1984	
2	901602	1	RULLEKJEDELÅS 5/8"	CONNECTING LINK 5/8"	
			SEKUNDÆRDRIFT	**SECONDARY DRIVE**	
3	901647	1	RULLEKJEDE 5/8"X1952	CHAIN 5/8"X1952	
4	901605	1	RULLEKJEDE 5/8"X48	CHAIN 5/8"X45	
5	901602	1	RULLEKJEDELÅS 5/8"	CONNECTING LINK 5/8"	
			GEARKASSE	**GEAR BOX**	
6	901633	1	RULLEKJEDE 5/8"X905	ROLLER CHAIN 5/8"X905	
7	901602	1	RULLEKJEDELÅS 5/8"	CONNECTING LINK 5/8"	
			SKAKEDRIFT	**AGITATOR DRIVE**	
8	901646	1	RULLEKJEDE 5/8"X1794	CHAIN 5/8"X1794	
9	901602	1	RULLEKJEDELÅS 5/8"	CONNECTING LINK 5/8"	

Numerisk deleregister/Numerical parts index

Delenr. Partno.	Fig/Ref Fig/Ref
205286	11/11
213710	10/1-12
213714	10/1
213716	10/8
213720	10/11
213725	8/70
213730	10/20a-38
213731	10/20b-38
213735	10/20a
213736	10/20b
213738	10/21
213740	10/25a
213741	10/25b
213743	10/38a
213744	10/38b
213750	8/1a-50
213751	8/1b-50
213752	8/1c-50
213753	8/1d-50
213754	8/1
213756	8/38
213758	8/34
213760	8/8
213762	8/22
213764	8/49
213800	7/1a-46
213801	7/1b-46
213804	7/13a
213805	7/13b
213806	7/1a
213807	7/1b
213808	7/40
213810	7/42
213815	7/44
213820	7/14a
213821	7/14b
213830	7/2
213850	6/1a-53
213851	6/1b-53
213852	6/1a
213853	6/1b
213855	6/11-18
213856	6/11
213860	6/17
213865	6/26
213870	6/40a-44
213871	6/40b-44
213872	6/40a
213873	6/40b
213875	6/41
213876	6/42
213877	6/43
213880	6/37a
213881	6/37b
213951	1/1
213954	1/9
213958	1/2
213964	1/7
213967	1/25
213987	18/20
214002	14/18
214007	14/8
214009	14/1b-40
214010	14/1a-40
214011	14/1b
214012	14/1a
214023	2/12a
214024	2/13a
214035	12/3a
214036	12/4a
214037	12/5a
214040	13/12a
214042	12/8
214043	12/7
214046	13/15a
214047	13/16a
214062	13/1a
214067	12/11a
214072	12/12a
214073	12/13a
214083	12/1a
214117	1/18
214121	2/1a
214128	2/6a
214131	2/1b
214138	2/6b
214169	2/7
214170	2/8
214180	2/2
214183	2/3
214203	20/8
214226	20/30
214227	20/31
214229	20/48
214232	20/1-47
214233	20/1
214240	20/2
214241	20/3
214245	20/4
214250	14/11
214281	2/17a
214282	2/18a
214287	2/15a
214288	2/14a
214290	11/19a-21
214291	11/19b-21
214292	11/19a
214293	11/19b
214295	11/20
214300	2/4
214301	2/5
214306	13/21
214310	11/1b
214311	11/1a
214320	11/1b-31
214321	11/1a-31
214323	11/3
214326	11/12
214327	11/10
214330	11/4
214333	11/29
214335	11/8
214337	11/9
214340	11/2
214341	11/5
214366	11/50a-52
214367	11/50b-52
214368	11/50a
214369	11/50b
214370	11/51
214371	11/52
214388	8/27
214389	8/28
214390	7/31
214391	7/32
214395	8/2
214396	8/9
214397	8/10
214401	18/1
214420	16/1a-26
214421	16/1b-26
214422	16/1a
214423	16/1b
214434	1/3
214435	16/2a
214436	16/2b
214439	14/2a-40
214440	14/2b-40
214441	14/2a
214442	14/2b
214447	16/25
214448	16/23
214449	18/6
214454	13/8
214475	8/61a
214495	10/29b-31
214496	10/29b
214499	7/11
214500	13/2a
214501	13/3a
214507	12/15
214512	12/17a
214513	12/16a
214528	9/1a
214529	9/2a
214530	10/2
214532	9/6a
214550	8/60a-64
214552	8/60a
214586	14/15
214591	12/36
214595	4/4
214600	12/24a
214601	12/25
214602	12/26
214608	12/31
214609	12/32
214614	12/29
214615	12/30
214622	13/4a
214623	13/5a
214625	13/22
214626	2/25
214627	13/18
214628	13/23
214629	2/24
214636	13/19
214656	17/5
214657	17/6
214670	17/15
214671	15/20
214672	18/11
214673	17/12b
214674	17/13b
214675	15/9
214676	15/16
214677	15/5a
214678	15/6
214679	15/11a
214680	17/12a
214687	15/5b
214688	15/11b
214690	15/26a
214691	15/26b
214693	17/21
214694	17/22
214696	15/27
214698	18/22
214703	2/17b
214704	2/18b
214705	2/12b
214706	2/13b
214708	2/15b
214709	2/14b
214718	12/3b
214719	12/4b
214720	12/5b
214722	12/11b
214723	12/12b
214724	12/13b
214725	12/1b
214727	12/17b
214728	12/16b
214734	12/23
214737	12/37
214752	13/4b
214753	13/5b
214757	13/1b
214760	13/2b
214761	13/3b
214765	13/12b
214769	13/15b
214770	13/16b
214781	9/1b
214782	9/2b
214783	9/11b
214784	9/14b
214795	8/60b-64
214796	8/60b
214798	8/61b
214907	18/19
214908	18/17
215005	12/19
215010	3/1
215025	3/14
215026	3/17
215032	3/26
215033	3/32
215035	3/10
215049	3/15
215058	3/34
215060	3/35
215063	4/15
215065	4/16
215081	3/7
215090	3/23-30
215091	3/23
215092	3/28
215093	3/27
215095	3/50-53
215096	3/50
215101	6/23
215102	10/4
215103	7/24
215104	6/20
215120	3/33
215125	3/19
215131	3/18
215141	8/63
215151	5/1
215154	5/7
215156	5/2
215158	5/5
215174	4/7-12
215175	4/7
215180	4/9
215185	4/14
215190	4/1
215193	4/2
215198	20/43
215199	7/33
215235	20/46
215241	20/10
215255	10/29b-31
215256	10/29a
215257	10/32
215260	6/34
215261	6/2
215269	6/33
215272	6/3
215288	10/35
215295	2/21
215464	20/32
215635	3/2-5a
215636	3/2
215645	3/3
215646	3/4
215649	3/5a
215671	7/46
215696	18/2-4
215697	18/2
215698	18/3
215699	18/4
216055	22/15
216062	22/17
216063	22/6
216068	21/9
216071	22/10
216072	22/9
216076	22/3
216088	22/16
216093	21/11
216099	21/6
216137	21/1
216138	21/4
216145	21/7
216146	21/8
216147	21/12
216151	22/1
216160	22/2
216459	7/16a-21
216460	7/16b-21
216461	7/16
216464	7/21
216465	7/20b
216466	7/20a
217134	15/1
217135	15/2
217170	9/12
217173	9/14a
217185	9/10a
217187	9/15
217189	9/16
217215	11/16a
217216	11/16b
217271	1/5
217280	1/16
217283	1/13
217407	20/40
217410	20/45
217416	20/41
217620	14/4a-6
217621	14/4b-6
217622	14/4
217624	14/5
217626	19/3
217652	15/15
217675	1/20
217676	1/22
217995	17/4
217996	17/11
218005	7/19
218007	7/17
218010	17/13a
218050	19/1a-11
218052	19/2
218060	19/1a
218065	19/6
218070	19/8
218075	19/10
218078	19/1b-11
218079	19/1c-11
218080	19/1b
218081	19/1c
219250	3/29
219656	12/34
219658	4/10
219669	15/18
219821	14/12
221316	3/26
221519	7/30
222599	3/8
222621	3/25
222628	3/24
222640	3/38
222667	4/5
222726	10/30
222821	5/9a
222822	5/6a
222823	5/6b

Numerisk deleregister/Numerical parts index

Delenr. Partno.	Fig/Ref Fig/Ref
222825	5/9b
223190	20/35
223494	20/9
229219	4/12
231231	6/13
231499	16/24a
231500	13/6
241341	3/12
241438	3/52
255889	16/3
256571	6/35
257772	15/29
258749	10/22
258975	6/15
259345	1/21
270448	19/4
271248	16/5-15
271250	16/5
271252	16/6-15
271253	16/6
271254	16/7
271255	16/8
281415	14/7b
281633	6/24
288776	20/38
288821	20/36
300819	16/16
300953	15/10
301267	1/23
301274	1/10-12
301275	1/10
301276	1/11
302234	21/10
306883	14/9
310098	14/6
311745	10/34
401013	14/30
401016	14/31
401020	14/34
401021	14/33
401022	14/37
401023	14/32
401024	14/38
401025	14/40
401026	14/36a
401027	14/36b
401043	14/39
410213	16/17
410328	7/23
410334	20/6
410389	19/5
410521	11/41
410708	18/5
410723	15/22
410724	15/23
410735	15/19
410747	15/25
410755	15/21
410784	15/12
411884	17/20
411885	15/8
411904	11/35
411905	11/36
411906	11/37
411907	11/38
411908	11/39
411909	18/33
411910	18/28
411911	11/42
430820	15/13
700029	6/12
700081	6/12c
700089	6/12g
700095	6/12f
700107	6/12i
700126	6/12d
700128	6/12e
700334	6/12a
700335	6/12b
703151	11/26
703152	11/27
813316	21/5
813320	22/7
813416	12/2
813420	10/26
813425	10/27
813430	3/53
813450	3/13
813470	10/28
813490	7/41
813500	7/43
813501	8/50
813502	8/50
813505	17/7
813520	12/22
813525	1/19
813530	12/6
813540	12/21
813580	16/24
813601	11/6
813605	10/24
813620	3/21
813625	13/10
813630	13/14
813635	13/11
813640	16/4
813650	10/31
813700	8/30
813701	7/34
813705	2/22
813706	1/26
813830	20/39
813850	20/7
813901	19/9
813903	14/7a
813905	11/25
813906	14/20
814050	11/21
814130	2/11
814132	19/11
821316	22/5
821416	20/49
821420	22/4
821430	3/39
821520	12/33
821525	13/7
821535	3/37
821550	12/35
821630	12/10
821640	12/27b
823525	19/4
827220	6/18
831516	6/14
831616	8/64
831716	10/10
837220	22/8
839316	5/3
839420	3/31
850154	22/8
850156	3/51
850158	20/49
850160	20/37
850166	14/7
852156	21/5
852158	10/26
852160	1/19
852162	1/26
852166	11/25
852167	11/15
855378	4/3
855380	6/51
860150	22/8
860155	22/5
860156	21/5
860158	10/26
860160	1/19
860163	1/26
860166	11/25
860169	4/13
860170	11/14
860175	11/30
862057	8/40
862058	10/23
862059	6/44
862063	5/8
865250	11/40
865332	19/7
865432	18/9
865440	13/24
866336	8/62
866440	11/31
866540	20/5
866545	10/9
866550	10/12
866645	1/14
867013	3/16
867053	1/8
867056	1/24
867061	1/15
867081	6/4
867086	20/11
867091	20/42
868420	16/12
868430	8/14
868435	7/28
868445	1/12
868580	6/12h
868604	16/11
868712	10/33
870632	3/30
870636	7/27
870637	8/5
870647	6/19
870718	3/20
870720	16/9
870727	6/5
870732	10/5
870822	6/21
871254	16/10
872015	17/10
873540	11/13
873545	11/7
901602	10/37
901605	23/4
901633	23/6
901646	10/36
901647	23/3
901649	23/1
911301	2/23