Spare parts list
Two row potato harvesters
Kverneland Underhaug 2607 - 2632

UH124223

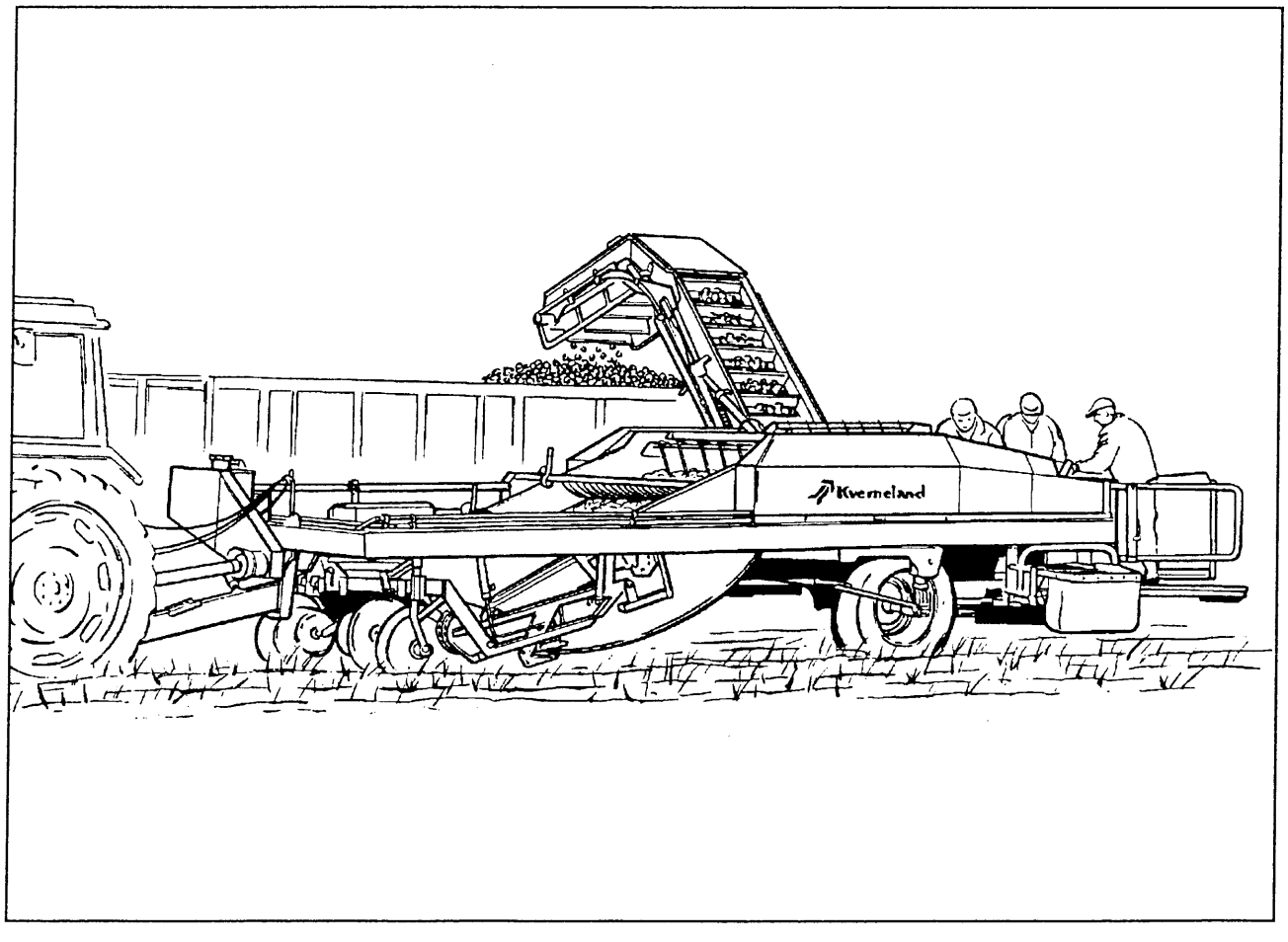

Reservedelsliste
Potethøstere modellgruppe 2600
Spare parts catalogue
Two row potato harvester model group 2600

Gyldig fra serienr./Valid from serial no.:	260268 →

⚠ Viktig!

Alle referanser til retningene høgre og venstre henviser til delenes posisjon når en står bak maskinen og ser i farts-retningen.

Ved bestilling av deler må en merke seg følgende:

Oppgi alltid maskinens serienummer. Dette står på identifikasjonsskiltet på maskinen.
Delens nummer (6 siffer) og navn må oppgis.
Referansenummeret brukes bare for å sammenholde deletegning og betegnelse i lista; og skal derfor ikke oppgis.

Pilen på illustrasjonen viser maskinens kjøreretning.

⚠ Important!

All references to right and left hand side apply to the view of the machine when standing behind and facing the direction of travel.

Please note the following when ordering spare parts:

It should always be referred to serial number. This is found on the machine's identification plate.
The spare part's catalogue number and description should be used.
The reference number is used only to help identifying the spare part on the illustration.

The arrow on the illustration shows the direction of travel

Supplied by:

kverneland group

Kverneland Nærbø AS
Torlandsvegen 3,
N-4365 Nærbø,
Norway

Table for content
Innholdsfortegnelse

		Fig.	Page/Side
Drawbar	Drag	1	2
Main drive	Drivverk	2	4
PTO-shaft	Kraftoverføringsaksel	3	8
PTO-shaft w/clutch	Kraftoverføringsaksel m/kopling	4	10
Wheel shaft	Hjulaksel	5	12
Diaboler	Diabolos	6	16
Roller discs	Rulleskjær	7	20
Digging unit	Opptaksorgan	8	22
Full width share	Skjær for seng	9	26
Full width 2-piece share	Skjær 2-delt fullbredde	10	28
Flat bottom centre share for bed	Skjær flat bunn	11	32
Lifting elevator w/belt agitator	Sålderenne m/mek.skaking	12	34
Web drive rh	Beltedrift v.	13	38
Web drive lh	Beltedrift h.	14	44
Haulm rollers	Risruller	15	48
Fall damper	Falldemper	16	50
Protection plates	Verneplater	17	52
1. Webs	1. Belter	18	54
2. Webs	2. Belter	19	60
Axial cleaning rollers	Aksialrenseruller	20	64
Elevator 900	Elevator 900	21	68
Elevator 1100	Elevator 1100	22	80
Chute canvas	Falldemper	23	92
Non-stop harvesting kits 900	Non-stop-utstyr 900	24	94
Non-stop harvesting kits 1100	Non-stop-utstyr 1100	25	96
Web elevator 900	Belte elevator 900	26	98
Web elevator 1100	Belte elevator 1100	27	100
Picking table upper section	Sorterbord øvre del	28	102
Picking table lower section	Sorterbord nedre del	29	106
Picking table 165	Sorterbord 165	30	110
Webs picking table	Belter sorterbord	31	114
Hydraulic, picking table 165	Hydraulikk, sorterbord 165cm	32	116
Guards	Skjermer	33	118
Hydraulics, tractor side	Hydraulikk, traktorside	34	122
Hydraulics elevator 1100	Hydraulikk elevator 1100	35	126
Hydraulic valve bank	Hydraulikksentral	36	130
Hydraulic working brake	Hydraulisk brems	37	132
3. Webs for 2627 - 2637	3. Belter for 2627 - 2637	38	134
Riselevator	Haulm elevator	39	136
Third web	Tredje belte	40	140
Webs	Belter	41	144
Hydraulic, haulm elevator	Hydraulikk, riselevator	42	146
Star roller	Stjerneruller	43	148
Distributor	Elevator fordeler	44	158
Sieving channel w/flight conveyor	Sålderenne medbringerbelte	45	162
Sieving channel w/flight conveyor	Sålderenne medbringerbelte	46	164
Hydraulics 3. Belte 2627 - 2637	Hydraulikk 3. Belte 2627 - 2637	47	166
Electric control	Elektrisk styring	48	168
Electronic control	Elektronisk styring	49	170
Road lights	Lysutstyr	50	172
Stickers	Skilt	51	174

Wheel drive – hydraulics	Hjuldrift - hydraulikk	52	176
PTO-shaft	Kraftoverføringsaksel	53	180
Hydraulics	Hydraulikk	54	182
Oil tank – Hydraulics	Oljetank - Hydraulikk	55	186
Web distributor	Beltefordeler	56	188
Drive shaft - teleweb	Drivverk – telebelte	57	194
Haulm rollers – falld. teleweb	Risruller – falldemper telebelte	58	198
Lower axle – teleweb	Nedre aksel – telebelte	59	200
Axial rollers	Aksialruller	60	202
Axial rollers	Aksialruller	61	206
Haulm roller unit	Risrullenhet	62	208
Web draw	Beltetrekker	63	212
Protection guard	Verneskjerm	64	214
Hydraulic pump side	Hydraulikk pumpeside	65	218
Expansion tank	Ekspansjonstank	66	220
Hydraulics tractor side	Hydraulics tractor side	67	222
Hydraulic valve bank	Hydraulikk sentral	68	226
Hydraulics rollers	Hydraulikk aksialruller	69	228
Picking table – teleweb	Sorterbord – telebelte	70	230

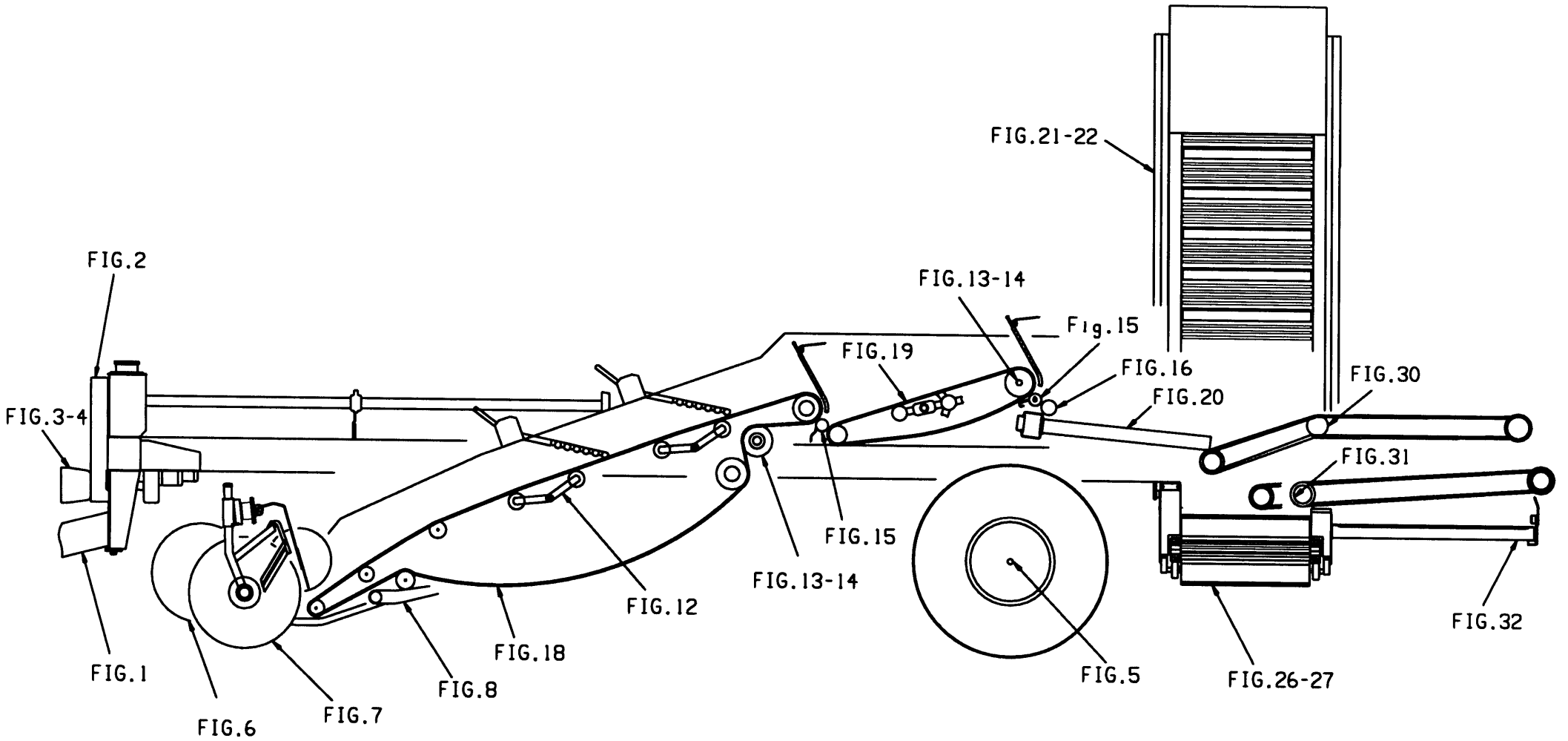
FIG.21-22
FIG.2
FIG.13-14
Fig.15
FIG.19
FIG.16
FIG.30
FIG.3-4
FIG.20
FIG.31
FIG.15
FIG.13-14
FIG.12
FIG.32
FIG.1
FIG.18
FIG.5
FIG.26-27
FIG.8
FIG.7
FIG.6

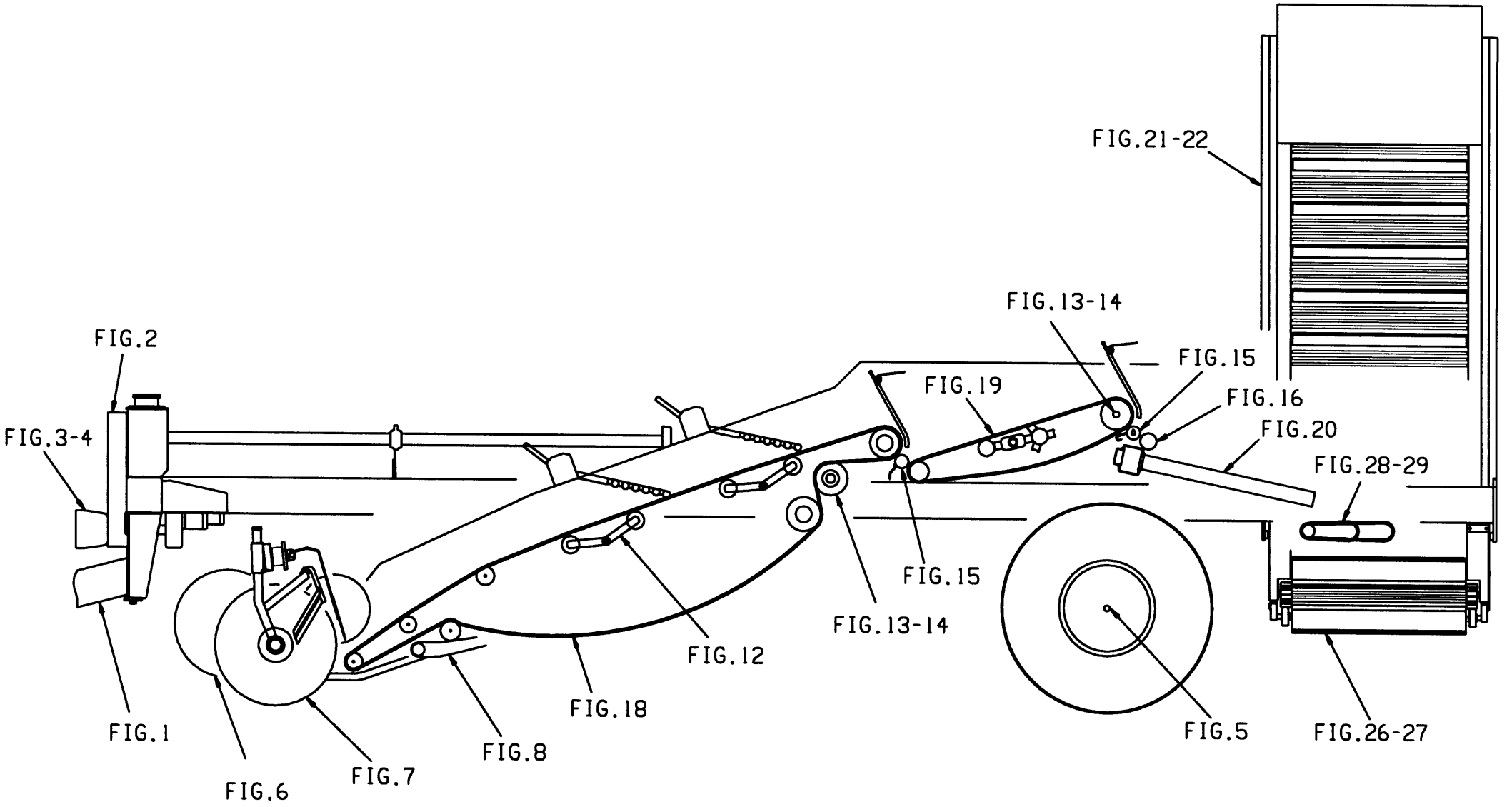
FIG.21-22
FIG.13-14
FIG.15
FIG.16
FIG.19
FIG.20
FIG.2
FIG.3-4
FIG.28-29
FIG.15
FIG.13-14
FIG.12
FIG.18
FIG.1
FIG.6
FIG.7
FIG.8
FIG.5
FIG.26-27

FORDELER STJERNERULLER/DISTRIBUTOR STAR ROLLER

TELEBELTE/TELEWEB

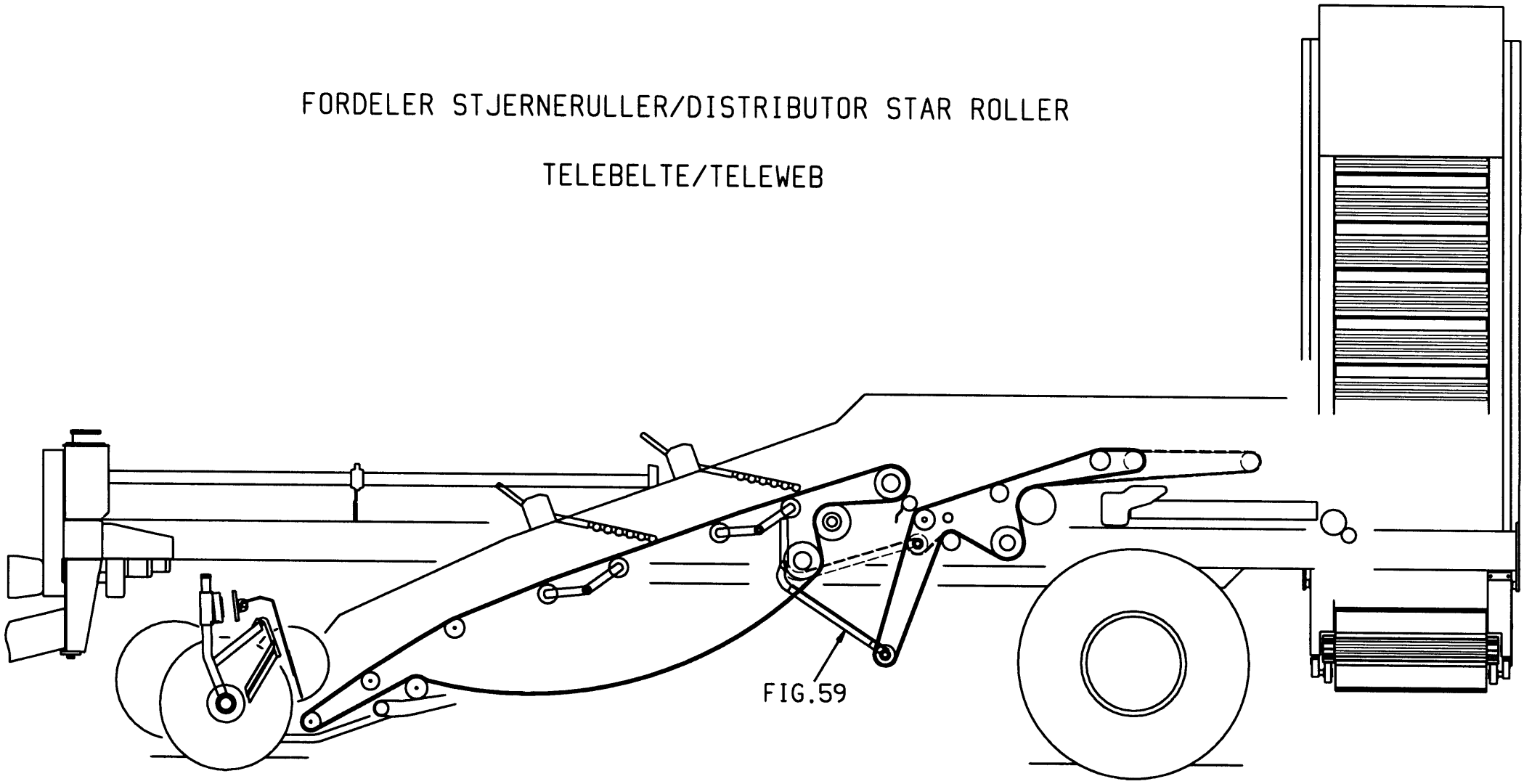

FIG.59

TELEBELTE/TELEWEB

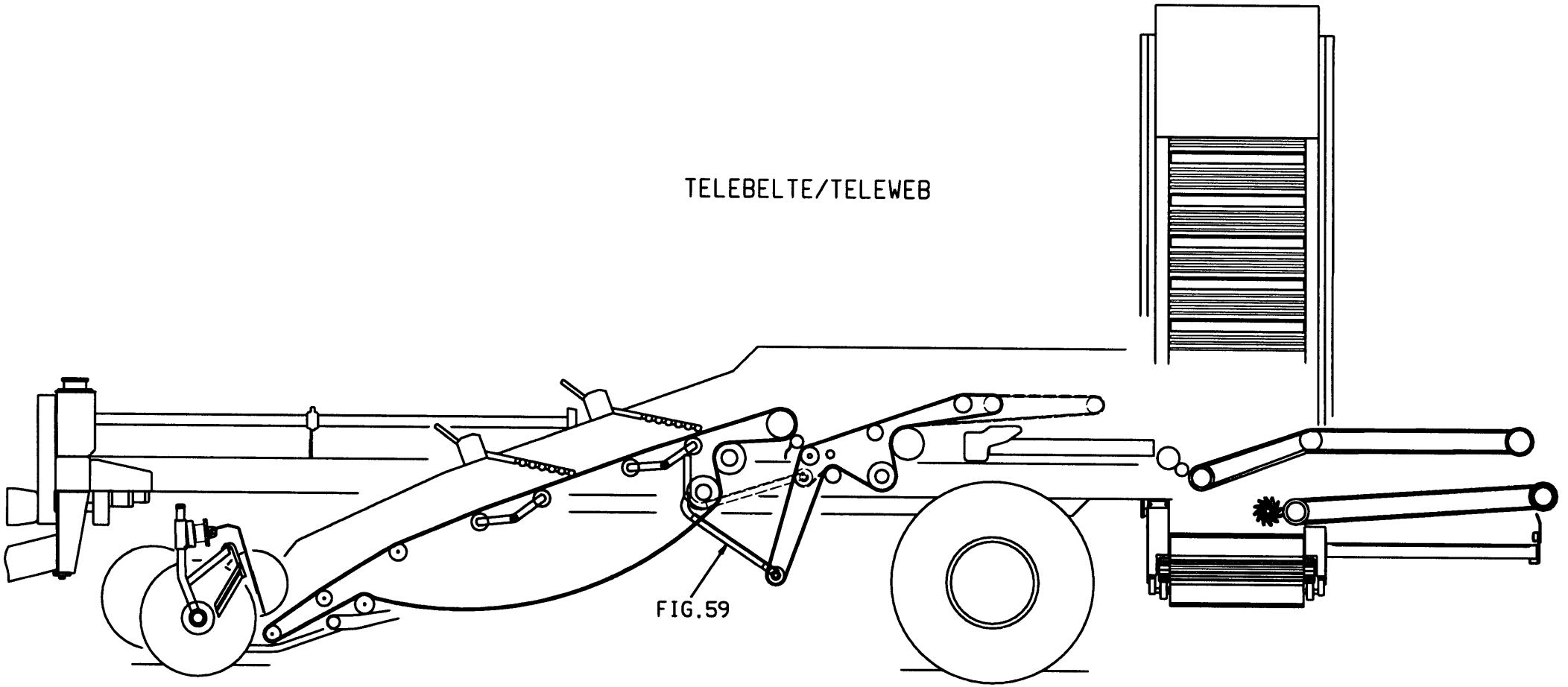

FIG.59

Kverneland

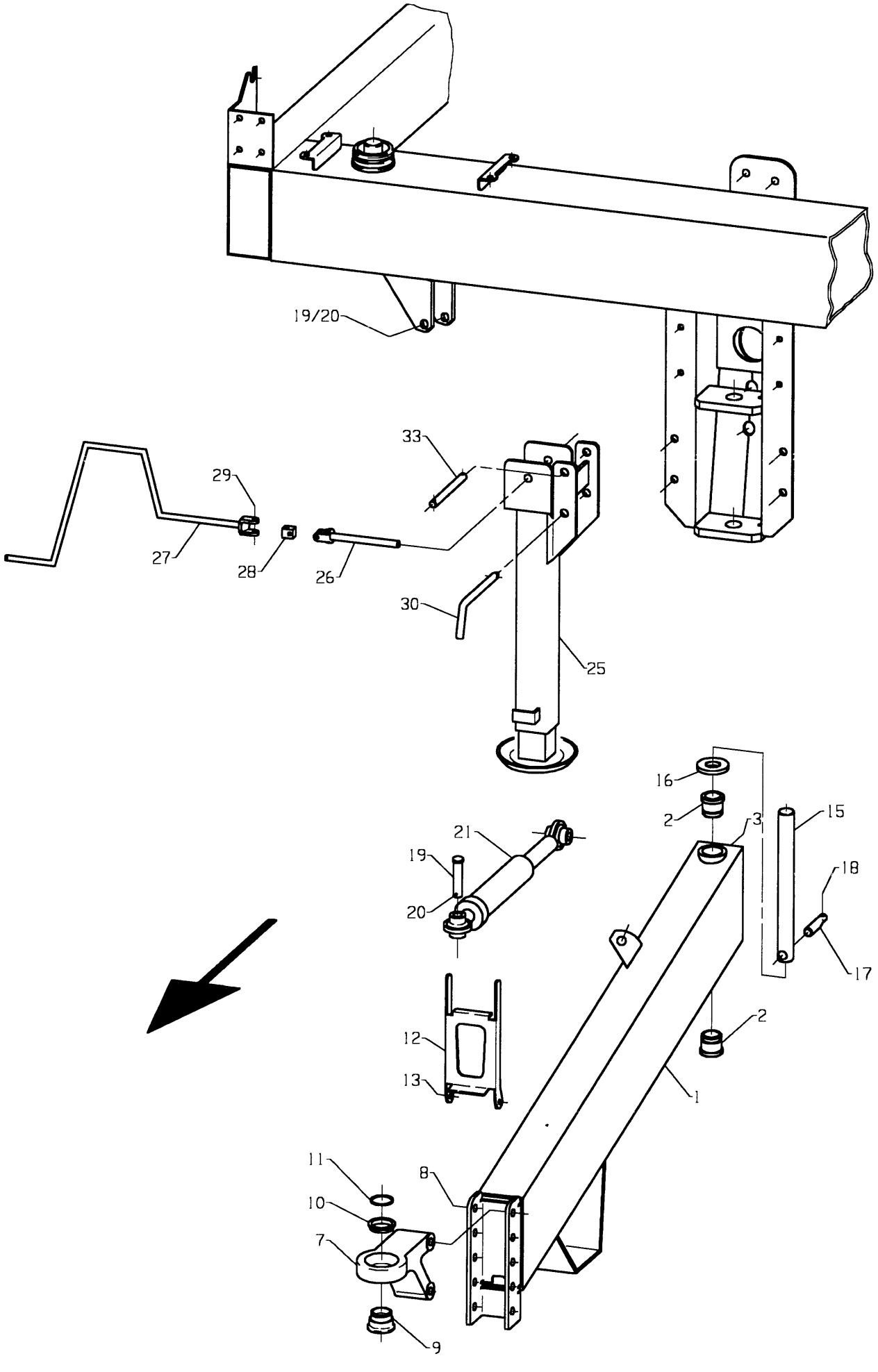

Fig. 1

Utgave: / Issue: 5	Redskap: / Implement: POTETHØSTER 2600 / POTATO HARVESTER 2600	Kverneland
Dato: / Date: 02-06	Enhet / Unit: DRAG / DRAWBAR	Fig nr.: 1

Ref. No.	Delenr. Part no.	Ant. Qty.	Gjenstand	Description	Anmerkning Note
1-13	**323000**		**DRAG KOMPL.**	**DRAWBAR ASSY**	
1	323001	1	DRAG SV.	DRAWBAR	
2	412344	2	LAGERFORING Ø35X40-Ø45/32	BEARING LINING	
3	873540	1	SMØRENIPPEL M6 RETT	GREASE NIPPLE M6	
4	301267	1	FOT KOMPL. SV.	PARKING LEG ASSY	
5	410493	2	DEKKHYLSE Ø12 FOR PARK.FOT	SPACER Ø12, PARKING LEG	
6	867056	1	RINGPINNE Ø6 ELZN	RING PIN 6 GALV	
7	300425	1	DRAGØYE	DRAWBAR YOKE	
8	813901	2	SEKSKANTSKRUE M16X110-8.8 ELZN	HEX. BOLT M16X110-8.8 GALV	
8	852166	2	NYLOCKMUTTER M16 ELZN.	NYLOCK NUT M16 GALV	
9-11	**301274**	**1**	**DRAGØYEFORING KOMPL.**	**YOKE BUSHING ASSY**	
9	301275	1	FORING	BUSHING	
10	301276	1	RING	RING	
11	868445	1	LÅSERING UTV. A45X1.75	CIRCLIP A45X1.75	
12	305196	1	STØTTE F./DRIVAKSEL	PTO SHAFT SUPPORT	
13	813603	1	SEKSKANTSKRUE M10X130-8.8 ELZN	HEX. BOLT M10X130-8.8 ELZN	
13	860160	2	BRIKKE Ø10.5-Ø21X2 ELZN	WASHER Ø10.5-Ø21X2	
13	852160	1	NYLOCKMUTTER M10 ELZN.	NYLOCK NUT M10 GALV.	
15	305199	1	AKSEL	AXLE	
16	419011	1	BRIKKE Ø35.2-Ø70X8	WASHER Ø35.2-Ø70X8	
17	305198	1	AKSELLÅS	AXLE LOCK	
18	813840	1	SEKSKANTSKRUE M16X40-8.8 ELZN	HEX. BOLT M16X40-8.8 GALV.	
18	852160	1	NYLOCKMUTTER M10 ELZN.	NYLOCK NUT M10 GALV.	
19	301266	2	BOLT M/HODE Ø19.1X71	BOLT Ø19.1X71	
20	867014	2	FJØRPINNE Ø4.0X75 ELZN	SPRING PIN Ø4.0X75 GALV	
21	300814	1	SYLINDER DV Ø50/Ø28X600+200	CYLINDER DA Ø55/Ø28X600+200	
*	300828		SYLINDERPAKNINGSSETT Ø50/Ø28	CYLINDER SEAL KIT Ø50/Ø28	
25-30	**323004**	**1**	**PARKERINGSFOT KOMPL.**	**PARKING LEG ASSY**	
25	310604	1	PARKERINGSFOT SV.	PARKING LEG	
26	310610	1	AKSEL SV.	SHAFT	
27	310613	1	SVEIV SV.	CRANK	
28	272979	1	FIRKANTSTYKKE	JOINT	
29	866436	2	SPENNHYLSE 8X36	SPLIT PIN 8X36	
30	310617	1	BOLT	BOLT	
33	270864	1	SPLINTBOLT	SPLIT PIN BOLT	

Kverneland

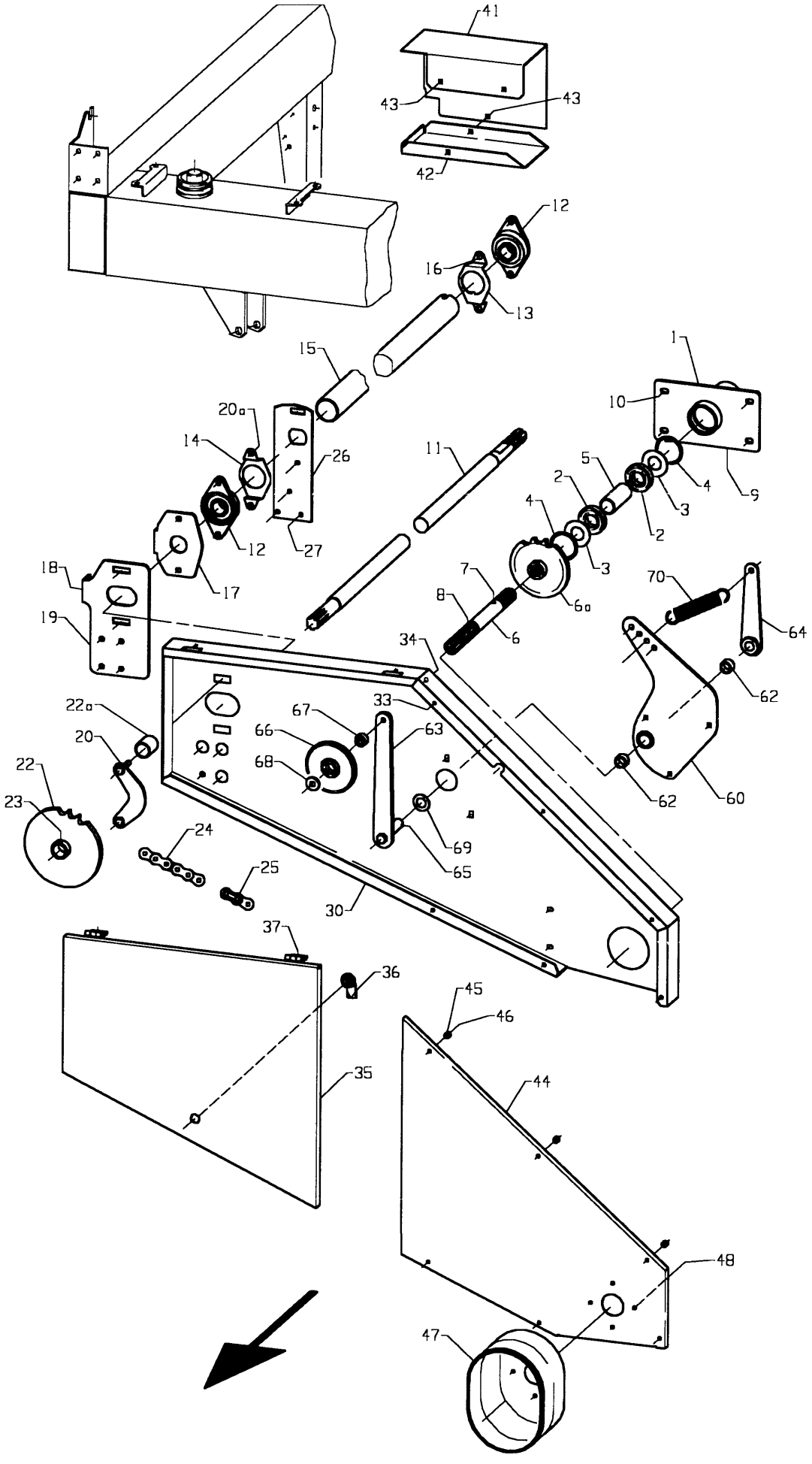

Fig. 2

Utgave: / Issue: 5	Redskap: / Implement: POTETHØSTER 2600 / POTATO HARVESTER 2600	Kverneland
Dato: / Date: 02-06	Enhet / Unit: DRIVVERK / MAIN DRIVE	Fig nr.: 2

Ref. No.	Delenr. Part no.	Ant. Qty.	Gjenstand	Description	Anmerkning Note
1-9	**323054**	**1**	**KRAFTINNTAKSAKSEL KPL.**	**MAIN DRIVE SHAFT ASSY**	
1	323056	1	LAGERHUS SV.	BEARING HOUSING	
2	870735	2	KULELAGER 6207	BALL BEARING 6207	
3	402547	2	BRIKKE Ø36-Ø71.5X2	WASHER Ø36-Ø71.5X2	
4	868572	2	LÅSERING INNV. I 72X2.5	CIRCLIP I72X2.5	
5	306088	1	HYLSE Ø36-Ø42.4X115	SPACER Ø36-Ø42.4X115	
6	306086	1	AKSEL	SHAFT	
6a	300388	1	KJEDEHJUL 1" 19T. SV.	SPROCKET 1" 19T.	
7	866545	1	SPENNHYLSE 10X45	TENSION PIN 10X45X2.0	
8	866450	1	SPENNHYLSE 8X50	TENSION PIN 8X50X1.5	
9	873541	1	SMØRENIPPEL M6-45GR.	GREASE NIPPLE M6-45DEG.	
10	813635	4	SEKSKANTSKRUE M12X35-8.8 ELZN	HEX. BOLT M12X35-8.8 GALV	
10	860163	8	BRIKKE Ø13-Ø24X2.5 ELZN	WASHER Ø13-Ø24X2.5	
10	852162	4	NYLOCKMUTTER M12 ELZN.	NYLOCK NUT M12 GALV	
11	321703	1	SPLINEAKSEL		
12	870146	2	KULELAGER SKF-FYTB35TF	BALL BEARING SKF-FYTB35TF	
13	306067	1	HYLSEHOLDER M/LÅS	BRACKET W/LOCK	
14	306066	1	HYLSEHOLDER FRAMRE	FRONT BRACKET	
15	321705	1	DEKKHYLSE	COVER TUBE	
16	813645	2	SEKSKANTSKRUE M12X45-8.8 ELZN	HEX. BOLT M12X45-8.8 GALV	
16	860163	4	BRIKKE Ø13-Ø24X2.5 ELZN	WASHER Ø13-Ø24X2.5	
16	852162	2	NYLOCKMUTTER M12 ELZN.	NYLOCK NUT M12 GALV	
17	306062	1	STRAMMEPLATE	BRACKET	
18	813670	1	SEKSKANTSKRUE M12X70-8.8 ELZN	HEX. BOLT M12x70-8.8 GALV.	
18	860163	1	BRIKKE Ø13-Ø24X2.5 ELZN	WASHER Ø13-Ø24X2.5	
18	852162	2	NYLOCKMUTTER M12 ELZN.	NYLOCK NUT M12 GALV	
19	306060	1	LAGERPLATE	BEARING BRACKET	
20	306064	1	SKRUEHOLDER SV.	BRACKET	
20a	860163	2	BRIKKE Ø13-Ø24X2.5 ELZN	WASHER Ø13-Ø24X2.5	
20a	852162	2	NYLOCKMUTTER M12 ELZN.	NYLOCK NUT M12 GALV	
21	813630	4	SEKSKANTSKRUE M12X30-8.8 ELZN	HEX. BOLT M12X30-8.8 GALV.	
21	860163	8	BRIKKE Ø13-Ø24X2.5 ELZN	WASHER Ø13-Ø24X2.5	
21	852162	4	NYLOCKMUTTER M12 ELZN.	NYLOCK NUT M12 GALV	
22	300390	1	KJEDEHJUL 1" 25T SV.	SPROCKET 1" 25T	
22a	300304	1	HYLSE Ø36-Ø42.4X54	COLLAR Ø36-Ø42	
23	866445	2	SPENNHYLSE 8X45	TENSION PIN 8X45X1.5	
24	902018	1	RULLEKJEDE 1"X2870	CHAIN 1"X2870	
25	902002	1	RULLEKJEDELÅS 1"	CHAIN CONNECTOR 1"	
26	303001	1	LAGERPLATE MIDTRE	BEARING BRACKET	
27	813630	3	SEKSKANTSKRUE M12X30-8.8 ELZN	HEX. BOLT M12X30-8.8 GALV.	
27	852162	3	NYLOCKMUTTER M12 ELZN.	NYLOCK NUT M12 GALV	
30	323070	1	KRAFTINNTAKSSKJERM SV.	MAIN DRIVE SHAFT ASSY	
31	410842	2	BRIKKE Ø10.5-Ø22X4	WASHER	
32	813535	2	SEKSKANTSKRUE M10X35-8.8 ELZN	HEX. BOLT M10X35-8.8 GALV.	
32	860160	2	BRIKKE Ø10.5-Ø21X2 ELZN	WASHER Ø10.5-Ø21X2	
32	813525	2	SEKSKANTSKRUE M10X25-8.8 ELZN	HEX. BOLT M10X25-8.8 GALV.	
32	860160	2	BRIKKE Ø10.5-Ø21X2 ELZN	WASHER Ø10.5-Ø21X2	
32	852160	2	NYLOCKMUTTER M10 ELZN.	NYLOCK NUT M10 GALV.	
33	813440	6	SEKSKANTSKRUE M8X40-8.8 ELZN	HEX. BOLT M8X40-8.8 GALV.	
33	850158	6	SEKSKANTMUTTER M8-8 ELZN.	HEX. NUT M8-8 GALV.	
34	813420	1	SEKSKANTSKRUE M8X20-8.8 ELZN	HEX. BOLT M8X20-8.8 GALV	
34	860158	2	BRIKKE Ø8.4-17X1.6 ELZN	WASHER Ø8.4-Ø17X1.6	
34	852158	1	NYLOCKMUTTER M8 ELZN.	NYLOCK NUT M8 GALV.	
35	323076	1	LUKE SV.		
36	306202	1	HAKELÅS KOMPL.	LOCK ASSY	
37	813420	2	SEKSKANTSKRUE M8X20-8.8 ELZN	HEX. BOLT M8X20-8.8 GALV	
37	860158	4	BRIKKE Ø8.4-17X1.6 ELZN	WASHER Ø8.4-Ø17X1.6	
37	852158	2	NYLOCKMUTTER M8 ELZN.	NYLOCK NUT M8 GALV.	

Kverneland

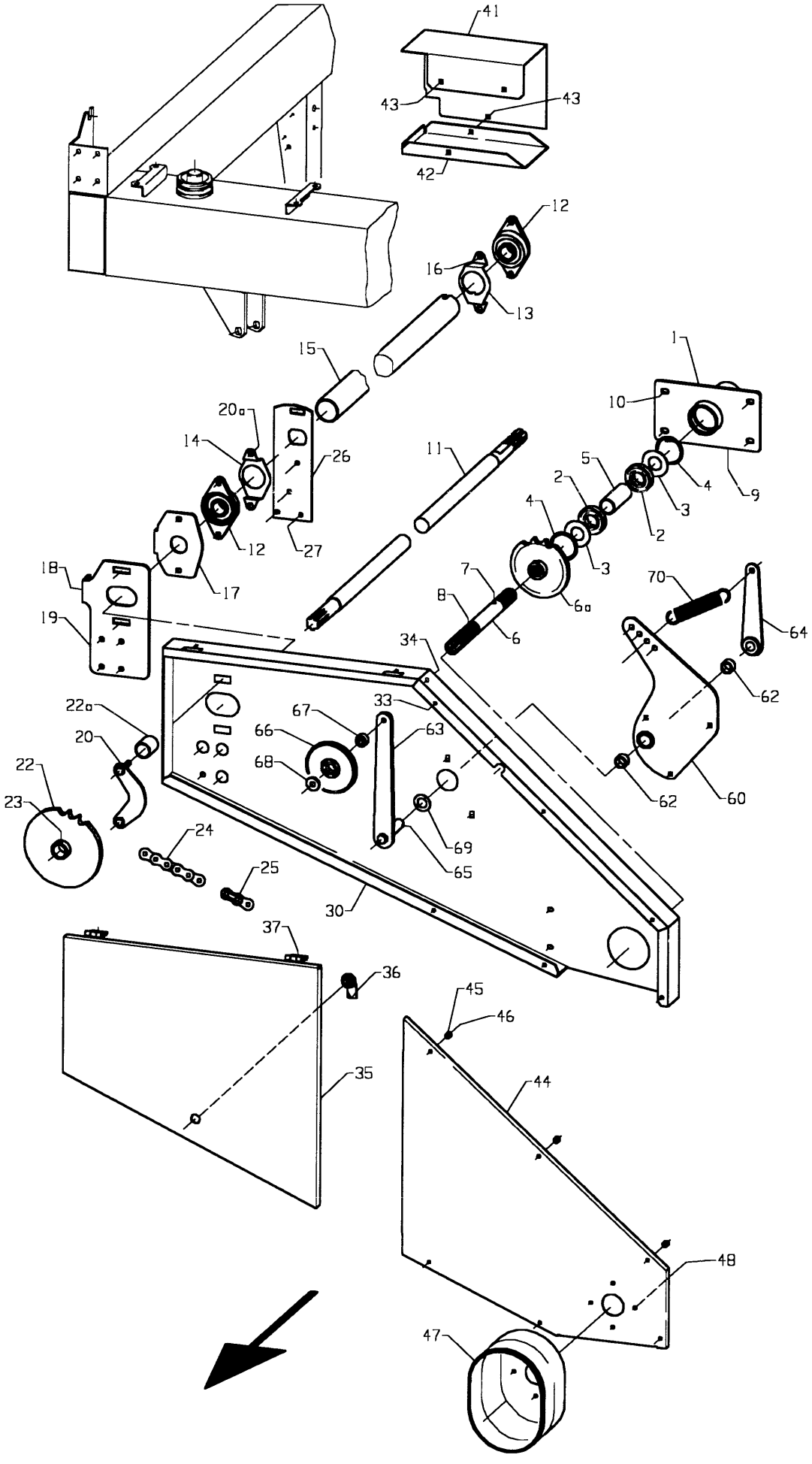

Fig. 2

Utgave: / Issue: 5	Redskap: / Implement: POTETHØSTER 2600 / POTATO HARVESTER 2600	Kverneland
Dato: / Date: 02-06	Enhet / Unit: DRIVVERK / MAIN DRIVE	Fig nr.: 2

Ref. No.	Delenr. Part no.	Ant. Qty.	Gjenstand	Description	Anmerkning Note
41-43	**306315**	**1**	**STYREPANELVERN KOMPL.**	**CONTROL PANEL GUARD ASSY**	
41	306316	1	STYREPANELVERN	CONTROL PANEL GUARD	
42	306317	1	BUNNPLATE	BOTTOM PLATE	
43	821420	4	LÅSESKRUE M8X20-4.6 ELZN.	CARRIAGE BOLT M8X20-4.6 GALV.	
43	231499	4	BRIKKE Ø11-Ø22X5	WASHER Ø11-Ø22X5	
43	860158	4	BRIKKE Ø8.4-17X1.6 ELZN	WASHER Ø8.4-Ø17X1.6	
43	852158	4	NYLOCKMUTTER M8 ELZN.	NYLOCK NUT M8 GALV.	
44	323074	1	DEKSEL		
45	306297	6	HYLSE Ø9-Ø14X14	COLLAR Ø9-Ø14X14	
46	813440	6	SEKSKANTSKRUE M8X40-8.8 ELZN	HEX. BOLT M8X40-8.8 GALV.	
46	860158	6	BRIKKE Ø8.4-17X1.6 ELZN	WASHER Ø8.4-Ø17X1.6	
46	852158	6	NYLOCKMUTTER M8 ELZN.	NYLOCK NUT M8 GALV.	
47	306261	1	PLASTSKJERM	PLASTIQ GUARD	
48	813416	4	SEKSKANTSKRUE M8X16-8.8 ELZN	HEX. BOLT M8X16-8.8 GALV.	
48	860158	4	BRIKKE Ø8.4-17X1.6 ELZN	WASHER Ø8.4-Ø17X1.6	
48	852158	4	NYLOCKMUTTER M8 ELZN.	NYLOCK NUT M8 GALV.	
	323130		**KJEDESTRAMMER FRONTKJEDE**	**TENSION ROLLER**	
60	323132	1	BRAKETT SV.	BRACKET	
61	873540	1	SMØRENIPPEL M6 RETT	GREASE NIPPLE M6 STRAIGHT	
62	214340	2	LAGERFORING Ø25-Ø32X20	BEARING LINING Ø25-Ø32X20	
63	323136	1	ARM SV.	ARM	
64	323140	1	FJÆRARM SV.	ARM	
65	866445	1	SPENNHYLSE 8X45	TENSION PIN 8X45	
66	305851	1	KJEDEHJUL 1" 16T M/LAGER	SPROCKET 1" 16T W/BEARING	
67	402570	1	BØSSING Ø13X22-24.8/4.5	BUSHING Ø13X22-Ø24.8/4.5	
68	228577	1	BRIKKE Ø13.5-Ø35X5	WASHER Ø13.5-Ø35X5	
69	323144	3	BRIKKE Ø25.8-Ø45X2	WASHER Ø25.8-Ø45X2	
70	300336	1	STREKKFJØR Ø4-Ø31X165	TESNION PIN Ø4-Ø31X165	

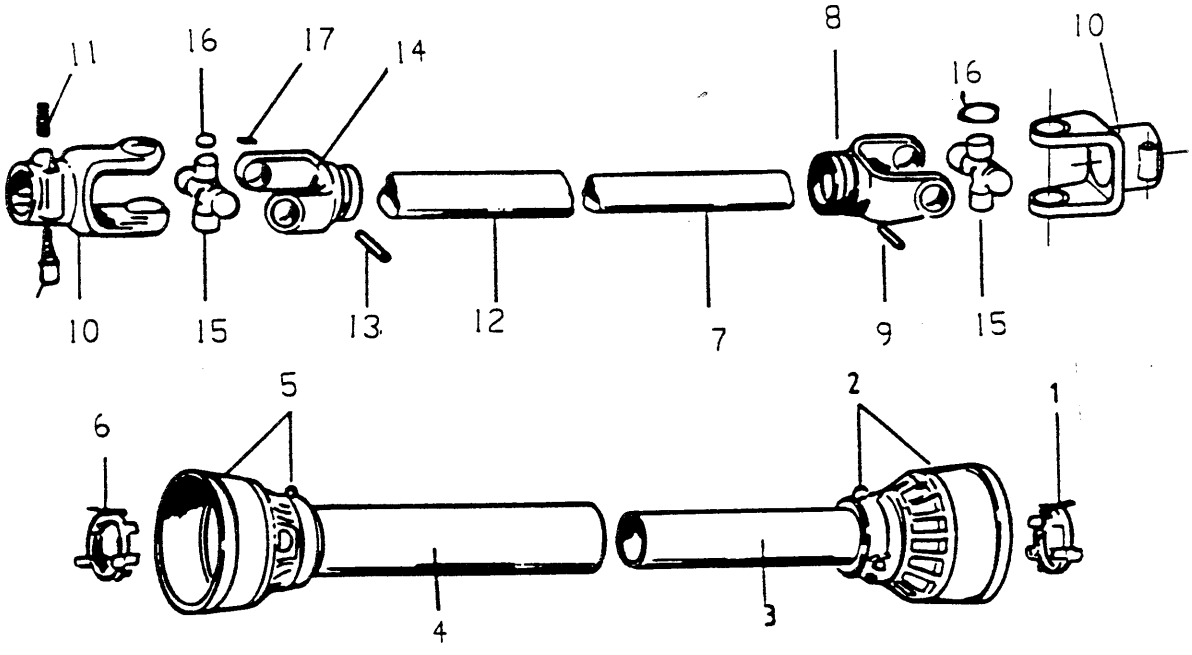

Fig. 3

Utgave: / Issue: 5	Redskap: / Implement: POTETHØSTER 2600 / POTATO HARVESTER 2600	Kverneland
Dato: / Date: 02-06	Enhet / Unit: KRAFTOVERF.AKSEL / PTO SHAFT	Fig nr.: 3

Ref. No.	Delenr. Part no.	Ant. Qty.	Gjenstand	Description	Anmerkning Note
*	710043		KRAFTOVERF.AKSEL 1010 U.KOPLIN	PTO-SHAFT 1010 WITHOUT CLUTCH	7106101ce007007
*	710044		INDRE AKSELHALVDEL 1010	INNER HALF SHAFT 1010	
1-3	710070	1	VERNEHYLSE KOMPL. INDRE	INNER SHAFT GUARD ASSY	5FI6101FF
1	710071	1	GLIDERING	I.BEARING 6-7	255060006
2	710072	1	SKJERM	I.CONE SETS F5-6-7	517050020
3	710090	1	VERNERØR INDRE	CM.SAFETY TUBE	236820786
4-6	710074	1	VERNEHYLSE KOMPL. YTRE	OUTER SHAFT GUARD ASSY	5FE6101FF
4	710091	1	VERNERØR YTRE	OUTER SAFETY GUARD	236830786
5	710076	1	SKJERM	O.CONE SETS F4-6-7	517050030
6	710077	1	GLIDERING	O.BEARING 6-7	255060005
7	710092	1	PROFILRØR INDRE	INNER CARDAN TUBE	225160846
8	710093	1	INDRE RØRGAFFEL	INNER TUBE YOKE	204066852
9	710080	1	SPENNHYLSE	FLEXIBLE PIN	341043000
10	710094	1	RØRGAFFEL	YOKE	507060351
11	710082	1	LÅSEPINNE KOMPL.	COMPLETE PUSH BUTTON	403000001
12	710095	1	PROFILRØR YTRE	OUTER CARDAN TUBE	225210846
13	710084	1	SPENNHYLSE	FLEXIBLE PIN	341042000
14	710085	1	YTRE RØRGAFFEL	OUTER TUBE YOKE	204066851
15	710086	2	KRYSS KOMPL.	CROSS JOURNAL ASS	41206
16	710087	8	LÅSERING	CIRCLIP	338020000
17	710096	2	SMØRENIPPEL	GREASE NIPPLE	348004000
18	710089	2	LENKE KOMPL.	COMPLETE CHAIN	252000001

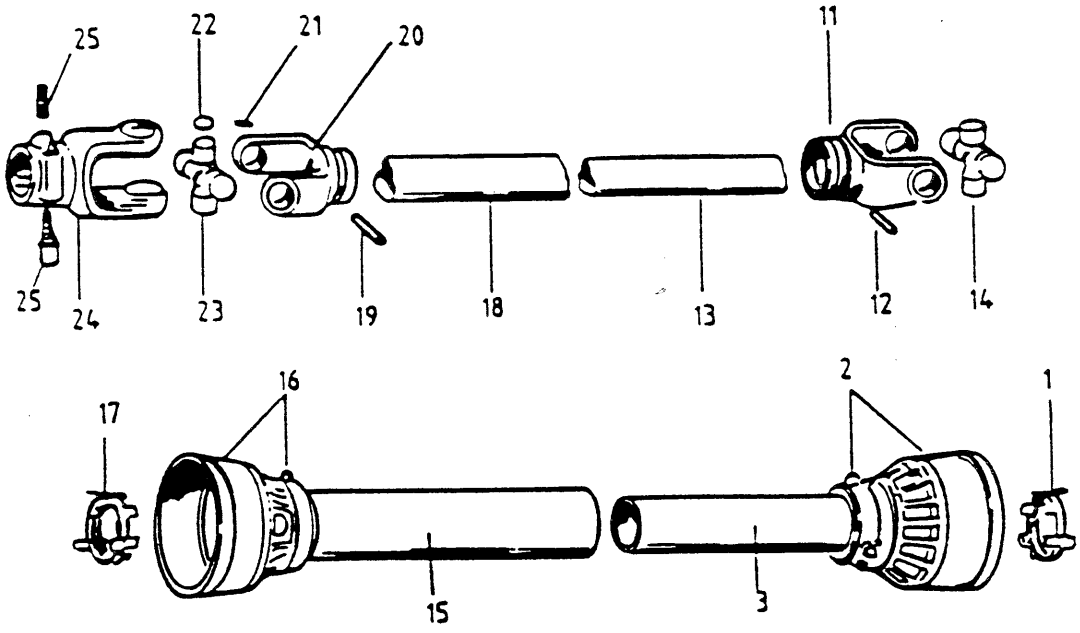

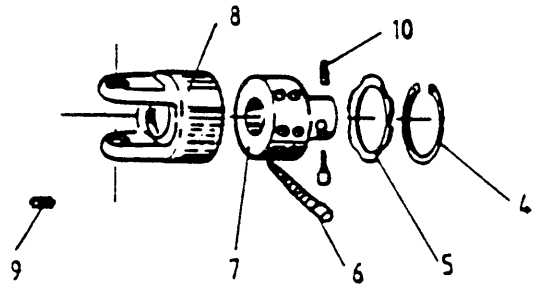

Fig. 4

Utgave: / Issue: 5	Redskap: / Implement: POTETHØSTER 2600 / POTATO HARVESTER 2600	Kverneland
Dato: / Date: 02-06	Enhet / Unit: KRAFTOVERF.AKSEL M/KOPLING / PTO SHAFT W/CLUTCH	Fig nr.: 4

Ref. No.	Delenr. Part no.	Ant. Qty.	Gjenstand	Description	Anmerkning Note
1-27	**710051**	**1**	**KRAFTOVERF.AKSEL 560 BYPY 800**	**PTO SHAFT 560 BYPY 800**	**7104056CE007136**
1-14	**710052**	**1**	**AKSELHALVDEL INNV.M/KOPL.800**	**INNER HALF SHAFT**	
1-3	**710306**	**1**	**VERNEHYLSE KPL.INDRE**	**INNER SHAFT GUARD ASSY**	**5FI4056FF**
1	710217	1	GLIDERING	O.BEARING 3-4	255040006
2	710216	1	SKJERM	I.CONE SETS F3-4	517040020
3	710307	1	VERNERØR INDRE	INNER SHAFT GUARD	236670367
4-11	**710275**	**1**	**SIKKERHETSKOPLING SA2/4**	**TORQUE LIM.SA2/4**	**613239002**
4	710225	1	LÅSERING	CIRCLIP	338005000
5	710224	1	TETNINGSRING	CLOSING PLATE	240000033
6	710223	12	TAPP OG FJØR	RATCHET W/SPRING	421340001
7	710222	1	NAV 1 3/8"	HUB C/W Q.D.	513350318
8	710221	1	KOPLINGSHUS M/GAFFEL	CLUTCH OUTR BODY	422032020
9	710220	1	SMØRENIPPEL	GREASE NIPPLE	348001000
10	710219	1	LÅSEPINNE KOMPL.	COMPLETE PUSH BUTTON	403000001
11	710210	1	INDRE RØRGAFFEL	INNER TUBE YOKE	204046852
12	710209	1	SPENNHYLSE	FLEXIBLE PIN	341048000
13	710309	1	PROFILRØR INDRE	INNER PROFIL TUBE	225100420
14	710202	2	KRYSS KOMPL.	CROSS JOURNAL ASSY	41204
15-25	**710053**	**1**	**AKSELHALVDEL UTV.M/GAFFEL**	**OUTER HALF SHAFT**	
15-17	**710310**	**1**	**VERNEHYLSE KPL.YTRE**	**OUTER SHAFT ASSY**	**5FE4056FF**
15	710311	1	VERNERØR YTRE	OUTER SHAFT GUARD	236680367
16	710213	1	SKJERM	O.CONE SETS	517040030
17	710212	1	GLIDERING	O.BEARING 3-4	255040005
18	710313	1	PROFILRØR YTRE	OUTER PROFIL TUBE	225120420
19	710206	1	SPENNHYLSE	FLEXIBLE PIN	341038000
20	710205	1	YTRE RØRGAFFEL	OUTER TUBE YOKE	204046851
21	710204	1	SMØRENIPPEL	GREASE NIPPLE	348004000
22	710203	4	LÅSERING	CIRCLIP	338017000
23	710202	1	KRYSS KOMPL.	CROSS JOURNAL ASSY	41204
24	710201	1	GAFFEL	YOKE WITH BUDGE	507040351
25	710219	1	LÅSEPINNE KOMPL.	COMPLETE PUSH BUTTON	403000001
27	**710218**	**2**	**LENKE KOMPL.**	**CHAIN ASSY**	**252000001**

Kverneland

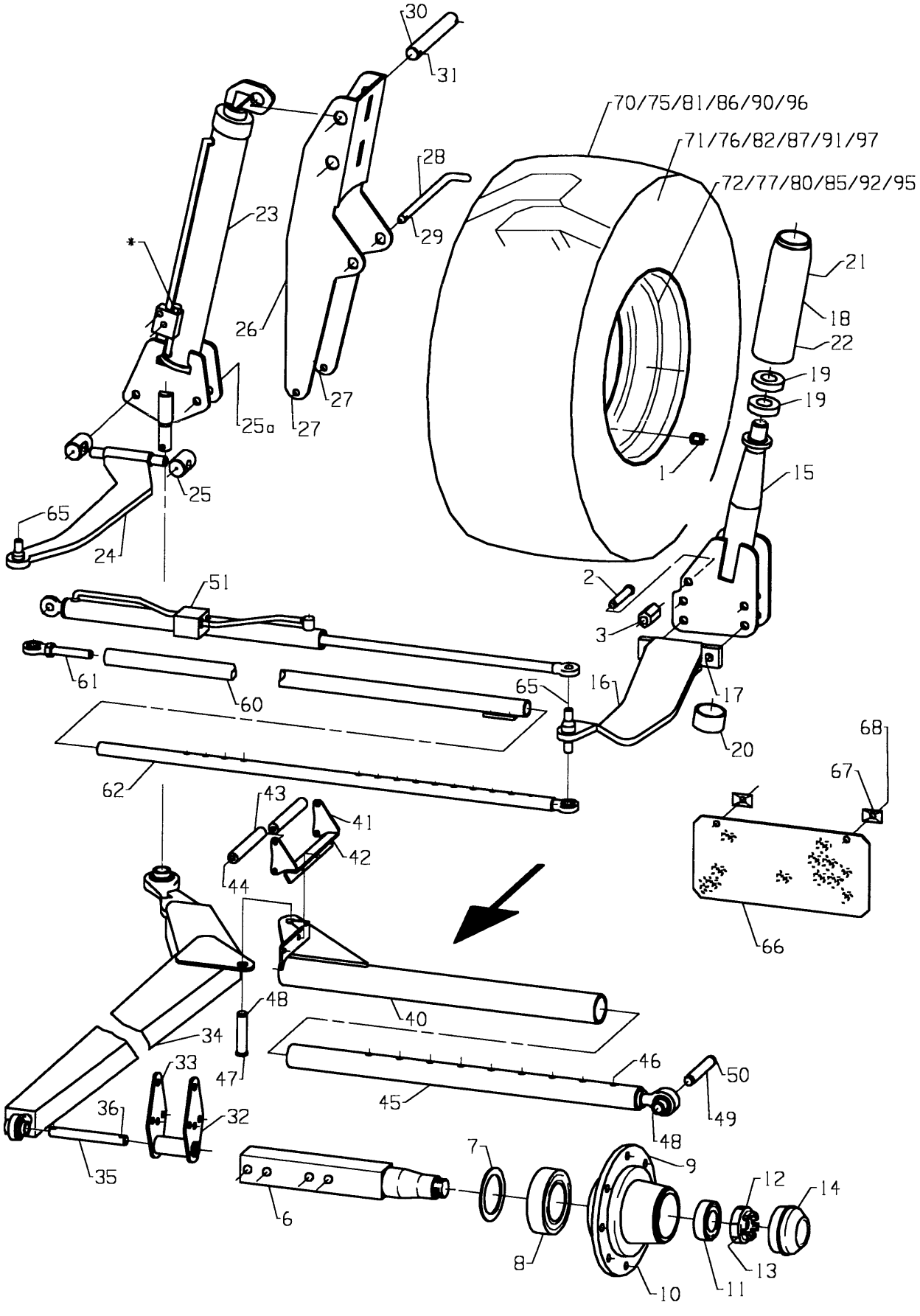

Fig. 5

Utgave: / Issue: 5	Redskap: / Implement: POTETHØSTER 2600 / POTATO HARVESTER 2600	Kverneland
Dato: / Date: 02-06	Enhet / Unit: HJULAKSEL / WHEEL SHAFT	Fig nr.: 5

Ref. No.	Delenr. Part no.	Ant. Qty.	Gjenstand	Description	Anmerkning Note
1	401027	16	HJULMUTTER M18X1.5 M.R16 KULE	WHEEL NUT M18X1.5 M.R16	
2	321198	1	BOLT M/HODE Ø20X117	BOLT Ø20X117	
3	321199	1	HYLSE 6KT.	COLLAR HEXAGON	
6-14	**321102**	**2**	**HJULNAV KOMPL.**	**WHEEL HUB ASSY**	
6	321103	1	HJULAKSEL	SHAFT	
7	321271	1	TETNING	SEAL	
8	321272	1	INDRE LAGER 30213	INNER BEARING 30213	
9	321273	1	NAV	HUB	
10	305527	8	HJULSKRUE M18-1.5X50	WHEEL BOLT M18-1.5X50	
10	401027	8	HJULMUTTER M18X1.5 M.R 16KULE	WHEEL NUT M18x1,5 W.R16KNOB	
11	321274	1	YTRE LAGER 32210	OUTER BEARING 32210	
12	321275	1	KRONEMUTTER	CROWN NUT	
13	321276	1	SPLINT	SPINDLE	
14	321277	1	NAVKOPP	CAP	
15	321109	1	AKSEL SV.	AXLE	
16	321176	1	SVINGARM V.SV.	SREERING ARM LH	
17	814105	2	SEKSKANTSKRUE M20X150-8.8 ELZN	HEX. BOLT M20X150-8.8 GALV	
17	860170	2	BRIKKE Ø21-Ø37X3 ELZN	WASHER Ø21-Ø37X3	
17	852167	2	NYLOCKMUTTER M20 ELZN.	NYLOCK NUT M20 GALV	
18	321113	1	HYLSE	COLLAR	
19	870742	2	KULELAGER 6208-2RS	BALL BEARING 6208-2RS	
20	321118	1	GLIDELAGER Ø80X40	SLIDING BEARING Ø80X40	
21	813825	1	SEKSKANTSKRUE M16X25-8.8 ELZNR	HEX. BOLT M16X25-8.8 GALV	
22	873540	1	SMØRENIPPEL M6 RETT	GREASE NIPPLE M6 STRAIGHT	
23	321133	1	SYLINDER SV.	CYLINDER	
*	411175		PILOTSTYRT TILBAKESLAGSVENTIL	PILOT ACTUATED CHECK VALVE	
*	411176		PAKN.SETT FOR P.ST. TILB.VENT	SEAL KIT FOR PILOT ACT. VALVE	
24	321182	1	SVINGARM H.SV.	STEERING ARM RH	
25	321187	2	MUTTER	NUT	
25	814102	2	SEKSKANTSKRUE M20X120-8.8 ELZN	HEX. BOLT M20X120-8.8 ELZN	
25	860170	2	BRIKKE Ø21-Ø37X3 ELZN	WASHER Ø21-Ø37X3	
26	321124	1	HJULSYLINDERFESTE	CYLINDER BRACKET	
27	813850	2	SEKSKANTSKRUE M16X50-8.8 ELZN	HEX. BOLT M16X50-8.8 GALV.	
27	860166	6	BRIKKE Ø17-Ø30X3 ELZN	WASHER Ø17-Ø30X3	
27	852166	2	NYLOCKMUTTER M16 ELZN.	NYLOCK NUT M16 GALV	
28	321115	1	BOLT Ø25X305	BOLT	
29	867056	1	RINGPINNE Ø6 ELZN	RING PIN 6 GALV	
30	321131	1	BOLT Ø35-Ø10/243/Ø10	BOLT	
31	865550	2	SPLINT 10X50 GALV.	SPLIT PIN 10 X 50	
32	321127	1	HJULAKSELFESTE SV.	WHEEL AXLE BRACKET	
33	813903	2	SEKSKANTSKRUE M16X130-8.8 ELZN	HEX. BOLT M16x130-8.8 GALV.	
33	852166	2	NYLOCKMUTTER M16 ELZN.	NYLOCK NUT M16 GALV	
33	860166	4	BRIKKE Ø17-Ø30X3 ELZN	WASHER Ø17-Ø30X3	
34	321152	1	HJULSTAG SV.	STAY	
35	321130	1	BOLT Ø25-Ø12/178/Ø12	BOLT Ø25-Ø12	
36	866650	3	SPENNHYLSE 12X50	TENSION PIN 12X50X2.5	
40-46	**321163**	**1**	**GAFFEL KOMPL.**	**FORK ASSY**	
40	321164	1	GAFFEL SV.	FORK	
41	321191	1	STØTTE SV.	SUPPORT	
42	813525	2	SEKSKANTSKRUE M10X25-8.8 ELZN	HEX. BOLT M10X25-8.8 GALV.	
42	860160	2	BRIKKE Ø10.5-Ø21X2 ELZN	WASHER Ø10.5-Ø21X2	
42	852160	2	NYLOCKMUTTER M10 ELZN.	NYLOCK NUT M10 GALV.	
43	321194	1	PLASTRØR	PLATE	
44	813611	2	SEKSKANTSKRUE M10X240-8.8 ELZN	HEX. BOLT M10X240-8.8 GALV	
44	860160	2	BRIKKE Ø10.5-Ø21X2 ELZN	WASHER Ø10.5-Ø21X2 GALV	
44	852160	2	NYLOCKMUTTER M10 ELZN.	NYLOCK NUT M10 GALV.	
45	321170	1	TELOSKOPSTAG SV.	TELESCOPE STAY	
46	813900	1	SEKSKANTSKRUE M16X100-8.8 ELZN	HEX. BOLT M16X100-8.8 GALV.	

Kverneland

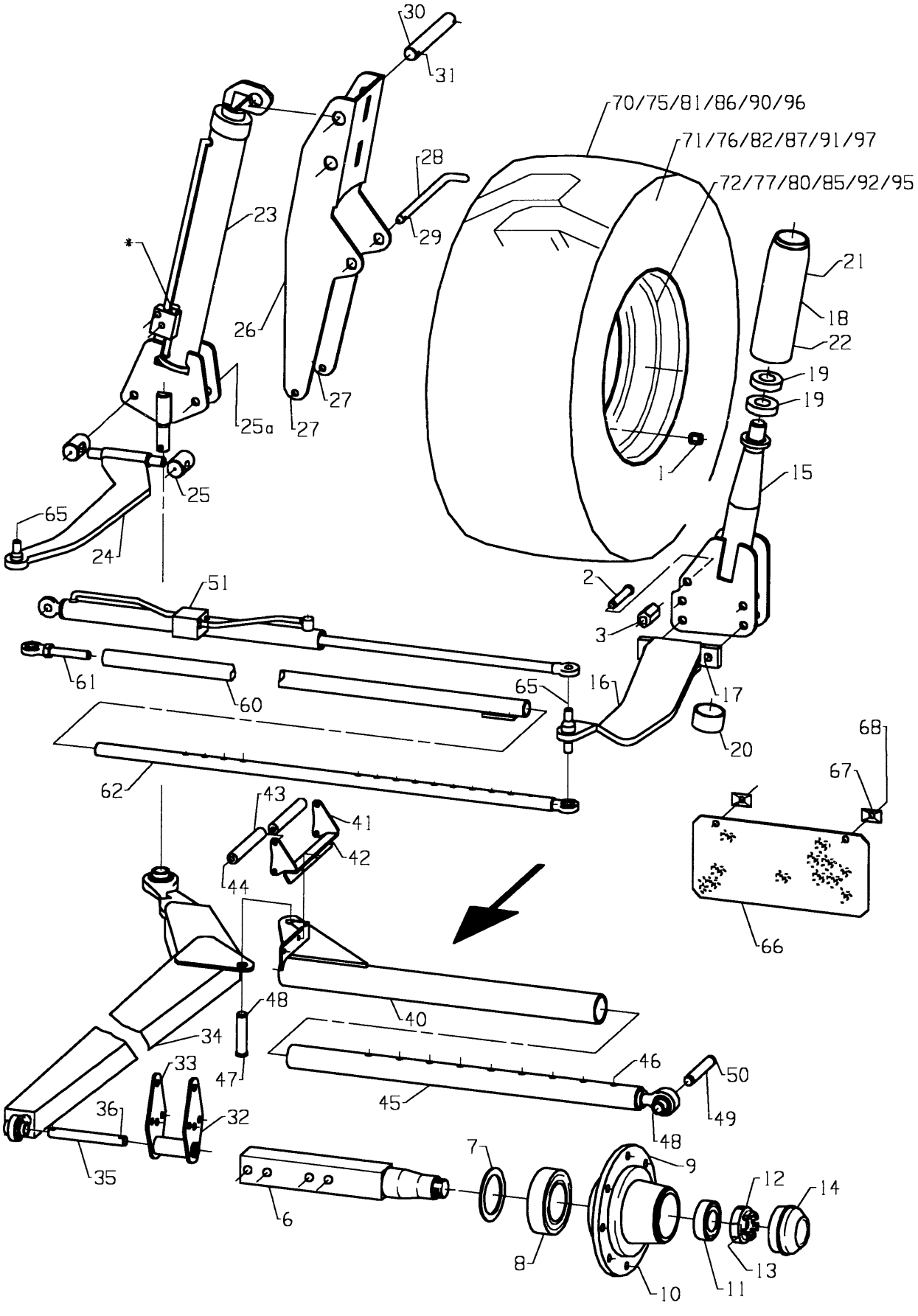

Fig. 5

Utgave: / Issue: 5	Redskap: / Implement: POTETHØSTER 2600 / POTATO HARVESTER 2600	Kverneland
Dato: / Date: 02-06	Enhet / Unit: HJULAKSEL / WHEEL SHAFT	Fig nr.: 5

Ref. No.	Delenr. Part no.	Ant. Qty.	Gjenstand	Description	Anmerkning Note
46	860166	1	BRIKKE Ø17-Ø30X3 ELZN	WASHER Ø17-Ø30X3	
46	852166	1	NYLOCKMUTTER M16 ELZN.	NYLOCK NUT M16 GALV	
47	321168	1	SPORBOLT M/HODE Ø25X95	PIN	
48	868420	1	LÅSERING UTV. A20X1.2	CIRCLIP A20X1.2	
49	410635	1	SPORBOLT Ø25X71.5 EL.GALV	CYLINDER PIN Ø25X71.5	
50	868420	2	LÅSERING UTV. A20X1.2	CIRCLIP A20X1.2	
51	321141	1	SYLINDER Ø40/ø25X730+570	CYLINDER	
52	866336	2	SPENNHYLSE 6X36	TENSION PIN 6X36X1.25	
60-64	**321200**	**1**	**STYRESTAG KPL.**	**WHEEL STEERING ASSY**	
60	321203	1	RØR SV.	TUBE	
61	321207	1	LENKEHODE SV.	LINK	
62	321206	1	STAG SV	STAY	
63	866445	1	SPENNHYLSE 8X45	TAPER 8X45	
64	813620	2	SEKSKANTSKRUE M12X20-8.8 ELZN	HEX. BOLT M12X20-8.8 GALV.	
65	866336	2	SPENNHYLSE 6X36	TENSION PIN 6X36X1.25	
66	321146	1	SKVETTLAPP	MUD GUARD	
67	300885	2	TOPPLATE 14-18 DOBBEL	TOP PLATE 14-18 DOUBLE	
68	813316	2	SEKSKANTSKRUE M6X16-8.8 ELZN	HEX. BOLT M6X16-8.8 GALV.	
68	860155	2	BRIKKE Ø6.4-Ø18X1.5 ELZN	WASHER Ø6.6-Ø18X1.5	
70a-72	**305285**	**1**	**HJUL 500/60-26.5 V. 8LAG,8HOL**	**WHEEL 500/60-26.5 8PLY LH 8H**	
70b-72	**305286**	**1**	**HJUL 500/60-26.5 H. 8LAG,8HOL**	**WHEEL 500/60-25.5 8PLY RH 8H**	
70	305287	1	DEKK 500/60-26.5 8LAG M.RIBBER	TYRE 500/60-26.5 8PLY LUGGED	
71	305288	1	SLANGE 500/60-26.5	TUBE 500/60-26.5	
72	305289	1	FELG 500-26.5 (8 HOL)	RIM 500-26.5	
75a-77	**305293**	**1**	**HJUL 600/55-26.5 V. 8LAG,8HOL**	**WHEEL 600/55-26.5 8PLY LH 8H**	
75b-77	**305294**	**1**	**HJUL 600/55-26.5 H. 8LAG,8HOL**	**WHEEL 600/55-26.5 8PLY RH 8H**	
75	305295	1	DEKK 600/55-26.5 8LAG M.RIBBER	TYRE 600/55-26.5 8PLY LUGGED	
76	305296	1	SLANGE 600/55-26.5	TUBE 600/55-26.5	
77	305297	1	FELG 600-26.5 (8 HOL)	RIM 600-26.5 8H	
80a-82	**305290**	**1**	**HJUL 500/60-22.5 V. 8LAG (8H)**	**WHEEL 500/60-22.5 8PLY LH 8H**	
80b-82	**305291**	**1**	**HJUL 500/60-22.5 H. 8LAG (8H)**	**WHEEL 500/60-22.5 8PLY RH 8H**	
80	305292	1	FELG 500-22.5	RIM 500-22.5	
81	303904	1	DEKK 500/60-22.5, 8 LAG	TYRE 500/60-22.5 8PLY	
82	300169	1	SLANGE 500-22.5	TUBE 500-22,5	
85a-87	**305280**	**1**	**HJUL 400/60-26.5 V. 8LAG (8H)**	**WHEEL 400/60-26.5 8PLY LH 8H**	
85b-87	**305281**	**1**	**HJUL 400/60-26.5 H.10LAG (8H)**	**WHEEL 400/60-26.5 8PLY RH 8H**	
85	305282	1	FELG 400-26.5	RIM 400-26.5	
86	305283	1	DEKK 400/60-26.5 8LAG	TYRE 400/60-26.5 8PLY	
87	305284	1	SLANGE 400/60-26.5	TUBE 400/60-26.5	
90-92	**305270**	**1**	**HJUL 13.6/12-28 10LAG TRAKTOR.**	**WHEEL 13.6/12-28 RH 10PLY 8H**	
90	305271	1	DEKK 13.6/12-28 10LAG TRAKTOR.	TYRE 13.6/12-28 10PLY	
91	305272	1	SLANGE 13.6-28	TUBE 13.6-28	
92	305273	1	FELG W12 X 28	RIM W12 X 28	
95a-97	**305290**	**1**	**HJUL 500/60 12 LAG V.**	**WHEEL 500/60 12PLY LH**	**ALTERNATIVE**
95b-97	**305291**	**1**	**HJUL 500/60 12 LAG H.**	**WHEEL 500/60 12PLY RH**	"
95	305292	1	FELG 500-22,5	RIM 500-22,5	
96	303912	1	DEKK 500/60-22,5 12 LAG	TYRE 500/60-22,5 12PLY	
97	300169	1	SLANGE 500-22.5	TUBE 500-22,5	

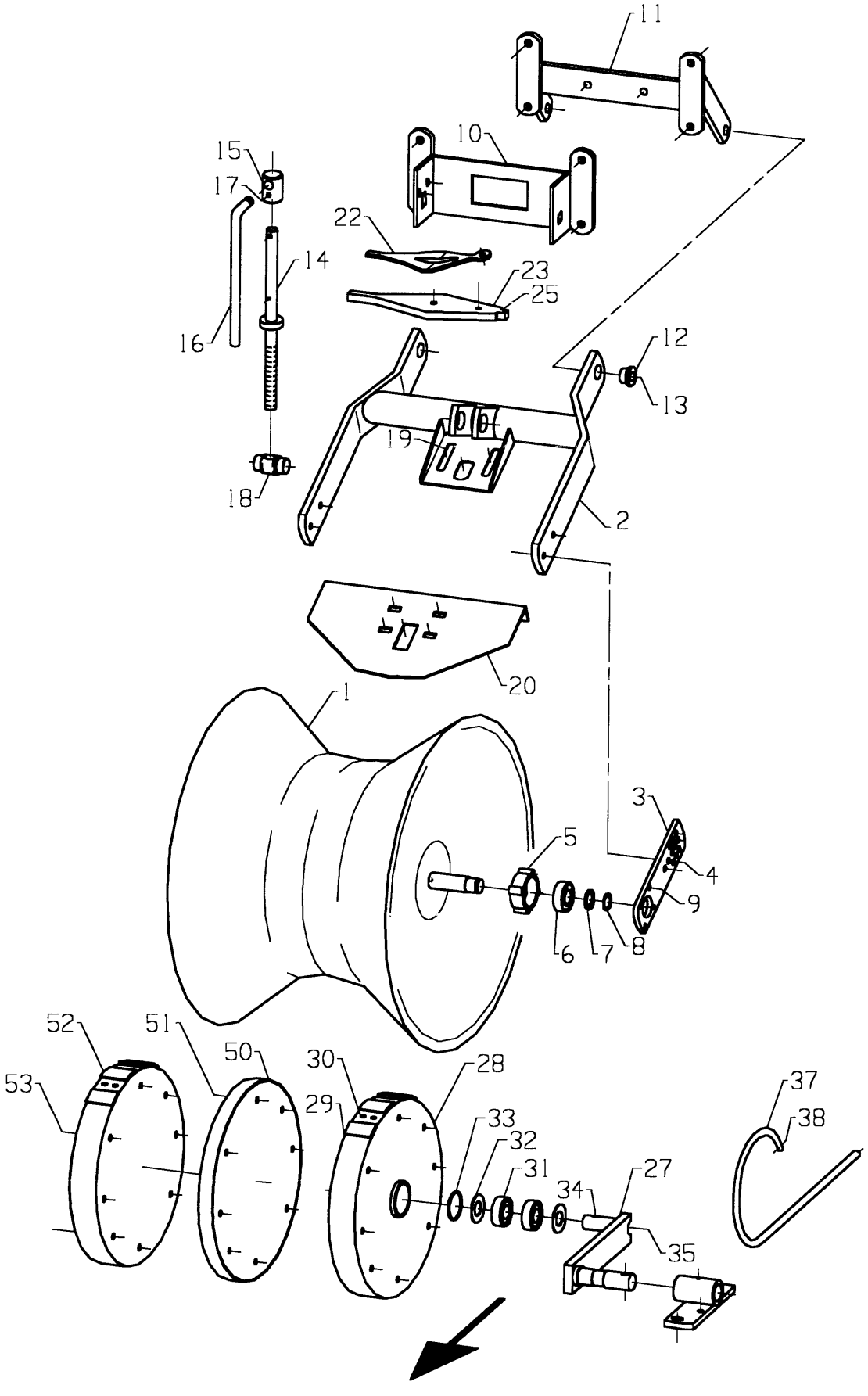
11
10
15
17
22
14
23
25
16
12
13
19
18
2
20
1
3
5
4
9
6
7
8
52
51
50
30
28
53
29
33
32
31
34
27
37
38
35

Fig. 6

Utgave: / Issue: 5	Redskap: / Implement: POTETHØSTER 2600 / POTATO HARVESTER 2600	Kverneland
Dato: / Date: 02-06	Enhet / Unit DIABOLER / DIABOLOS	Fig nr.: 6

Ref. No.	Delenr. Part no.	Ant. Qty.	Gjenstand	Description	Anmerkning Note
1-25	**330514**	**2**	**DIABOL KPL.**	**DIABOLO ASSY**	
1	300258	1	DIABOL PLAST	DEPTH ROLLER PLASTIC	
2	300269	1	DIABOLRAMME SV.	DEPTH ROLLER FORK	
3	300282	2	LAGERARM SV.	DEPTH ROLLER ARM	
4	813530	4	SEKSKANTSKRUE M10X30-8.8 ELZN	HEX. BOLT M10X35-8.8 GALV.	
4	852160	4	NYLOCKMUTTER M10 ELZN.	NYLOCK NUT M10 GALV.	
5	231044	2	LAGERHUS Ø52-Ø34	BEARING HOUSING Ø52-Ø34	
6	870728	2	KULELAGER 6205-2R-C3 SPESIAL	BALL BEARING 6205-2RS-C3 SPEC.	
7	868605	2	STØTTERING 25X35X2	SUPPORT RING 25X35X2.0	
8	868426	2	LÅSERING UTV. A25X2	CIRCLIP A25X2	
9	813416	8	SEKSKANTSKRUE M8X16-8.8 ELZN	HEX. BOLT M8X16-8.8 GALV.	
9	860158	1	BRIKKE Ø8.4-Ø17X1.6 ELZN	WASHER Ø8.4-Ø17X1.6 GALV	
10	322216	1	DIABOLFESTE FREMRE SV.	DEPTH ROLLER FRONT BRACKET	
11	300278	1	DIABOLFESTE BAKRE SV.	DEPTH ROLLER REAR BRACKET	
12	300285	2	BØSSING Ø16.5X18-Ø25/13	BUSHING Ø16.5X25-Ø25/13	
13	813850	2	SEKSKANTSKRUE M16X50-8.8 ELZN	HEX. BOLT M16X50-8.8 GALV.	
13	860166	2	BRIKKE Ø17-Ø30X3 ELZN	WASHER Ø17-Ø30X3 GALV	
13	852166	2	NYLOCKMUTTER M16 ELZN.	NYLOCK NUT M16 GALV	
14-17	**322240**	**1**	**STILLSKRUE KPL.**	**DEPTH ADJUSTING SCREW**	
14	322241	1	SKRUE SV.	SCREW	
15	322243	1	HODE	CAP	
16	300291	1	HÅNDTAK	HANDLE	
17	866436	1	SPENNHYLSE 8X36	TENSION PIN 8X36	
18	300286	1	STILLMUTTER	NUT	
19	813550	1	SEKSKANTSKRUE M10X50-8.8 ELZN	HEX. BOLT M10x50-8.8 GALV	
19	852160	1	NYLOCKMUTTER M10 ELZN.	NYLOCK NUT M10 GALV.	
20	330515	1	DIABOL AVSKRAPER	DIABOLO SCRAPER	
21	821525	2	LÅSESKRUE M10X25-4.6 ELZN.	CARRIAGE BOLT M10X25-4.6 GALV.	
21	860160	2	BRIKKE Ø10.5-Ø21X2 ELZN	WASHER Ø10.5-Ø21X2	
21	852160	2	NYLOCKMUTTER M10 ELZN.	NYLOCK NUT M10 GALV.	
22	322211	1	FJÆRPLATE	SPRING LEAF	
23	322210	1	TERS	CROSSPIECE	
24	813535	1	SEKSKANTSKRUE M10X35-8.8 ELZN	HEX. BOLT M10X35-8.8 GALV.	
24	852160	1	NYLOCKMUTTER M10 ELZN.	NYLOCK NUT M10 GALV.	
25	867014	1	FJØRPINNE Ø4.0X75 ELZN	SPRING PIN Ø4.0X75 GALV	
26	813701	8	SEKSKANTSKRUE M12X110-8.8 ELZN	HEX. BOLT M12X110-8.8 GALV.	
26	860163	8	BRIKKE Ø13-Ø24X2.5 ELZN	WASHER Ø13-Ø24X2.5	
26	852162	8	NYLOCKMUTTER M12 ELZN.	NYLOCK NUT M12 GALV	
27-36	**300725**	**2**	**RISTREKKEHJUL M/ARM KOMPL.**	**HAULM PULL IN ROLLER ASSY**	
27	300729	1	ARM SV.	ARM	
28-30	**300708**	**1**	**RISTREKKEHJUL M/BANE**	**HAULM PULL IN ROLLER**	
28	300709	1	RISTREKKEHJUL SV.	HAULM PULL IN ROLLER	
29	300710	1	BANE	HAULM ROLLER RUBBER	
30	862059	14	POPNAGLE Ø4.8X16.5 ALUMINIUM	POP RIVET Ø4.8X16.5 ALUMINIUM	
31	870726	2	KULELAGER 6205-RS	BALL BEARING 6205-RS	
32	255650	2	BRIKKE Ø26-Ø51X1.6	WASHER Ø26-Ø51X1.6	
33	868552	1	LÅSERING INNV. I 52X2	CIRCLIP I52X2.00	
34	866436	1	SPENNHYLSE 8X36	TENSION PIN 8X36	
35	873540	1	SMØRENIPPEL M6 RETT	GREASE NIPPLE M6 STRAIGHT	
26	827420	4	SENKSKRUE M/6KT.HOL M10X20	COUNTERSUNK M10X20	
37	300720	2	FJØR	BLADE SPRING	
38	867014	2	FJØRPINNE Ø4.0X75 ELZN	SPRING PIN Ø4.0X75 GALV	
39	813550	2	SEKSKANTSKRUE M10X50-8.8 ELZN	HEX. BOLT M10x50-8.8 GALV	
39	850160	2	SEKSKANTMUTTER M10-8 ELZN.	HEX. NUT M10-8 GALV.	
39	852160	2	NYLOCKMUTTER M10 ELZN.	NYLOCK NUT M10 GALV.	

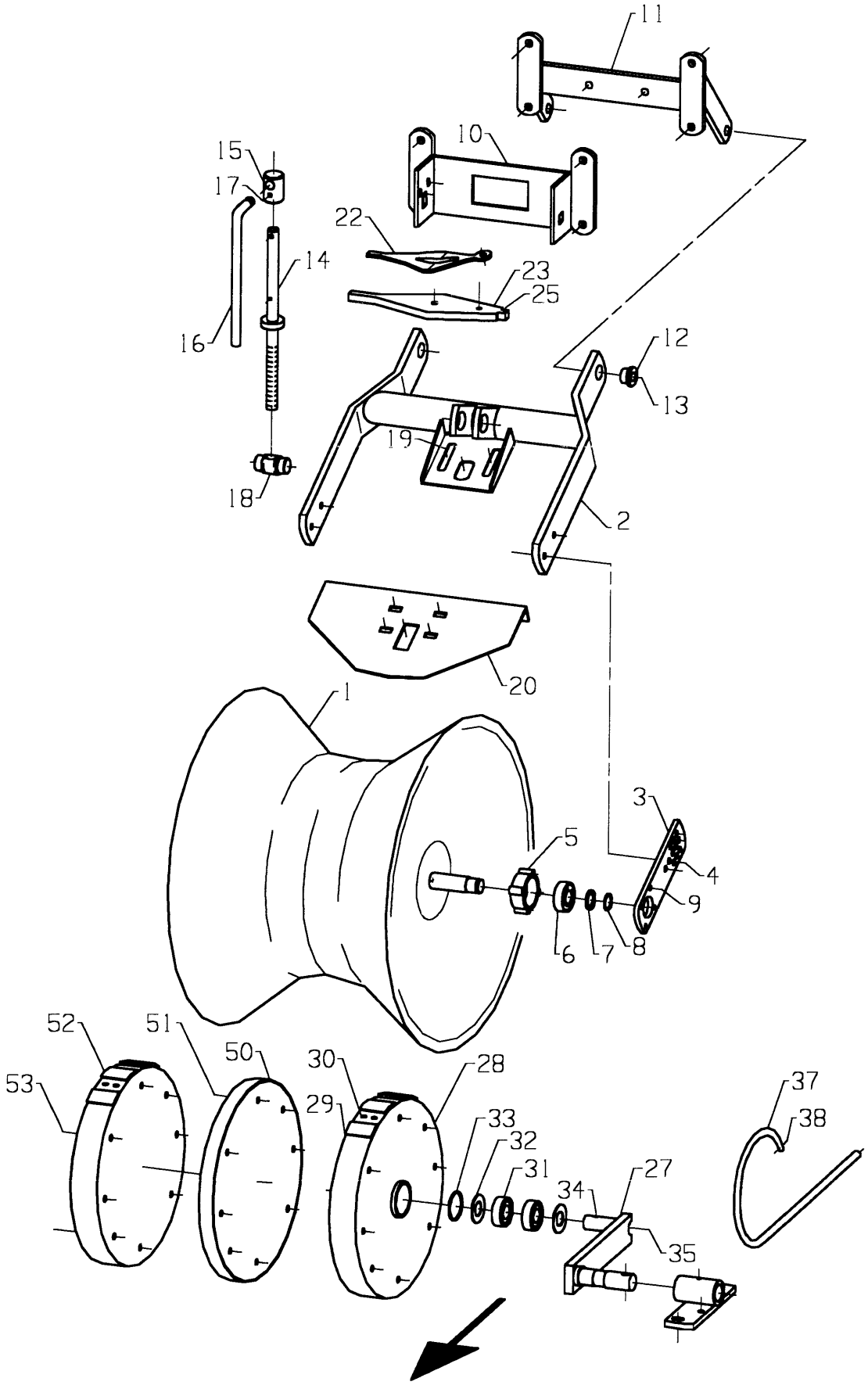
11
10
15
17
22
14
23
25
16
12
13
19
18
2
20
1
3
5
4
9
6
7
8
52
51
50
30
28
53
29
33
32
31
34
27
37
38
35

Fig. 6

Utgave: / Issue: 5	Redskap: / Implement: POTETHØSTER 2600 / POTATO HARVESTER 2600	Kverneland
Dato: / Date: 02-06	Enhet / Unit DIABOLER / DIABOLOS	Fig nr.: 6

Ref. No.	Delenr. Part no.	Ant. Qty.	Gjenstand	Description	Anmerkning Note
			UTB.SATS TIL 125 INNTR.RULLER		
50	306170	2	RISTREKKEHJUL 25 SV.	HAULM PULL IN ROLLER	
51	827445	8	SENKSKRUE M/6KT. HOL M10X45	COUNTERSUNK M10X45	
52	306225	2	RISTREKKEHJUL 2" M/BANE	HAULM PULL IN ROLLER 2"	
53	827465	8	SENKSKRUE M/6KTHOL M10X65	COUNTERSUNK M10X65	

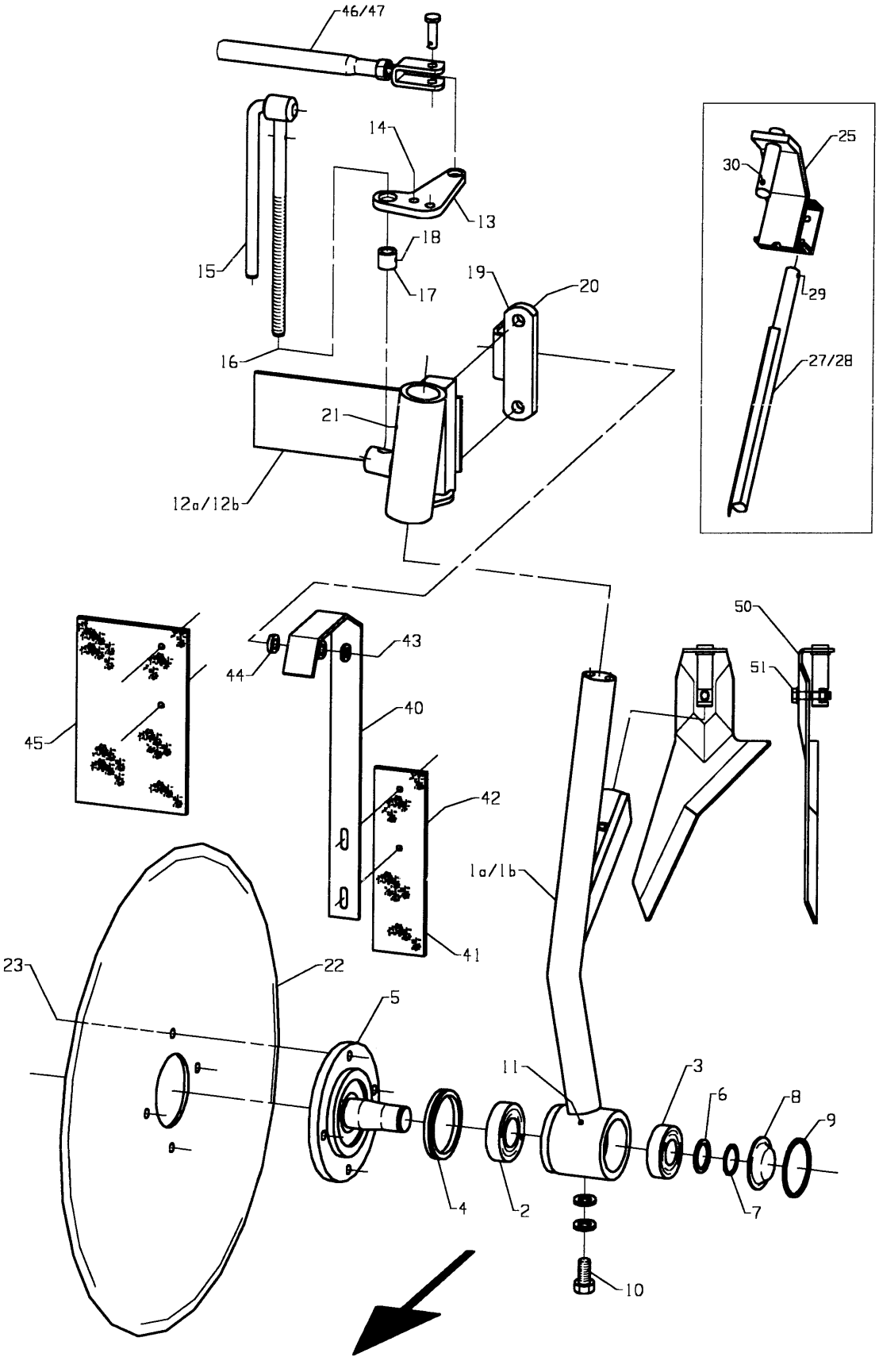
46/47
14
13
18
17
15
19
20
16
21
12a/12b
25
30
29
27/28
50
51
43
44
40
45
42
41
1a/1b
23
22
5
11
3
6
8
9
4
2
7
10

Fig. 7

Utgave: / Issue: 5	Redskap: / Implement: POTETHØSTER 2600 / POTATO HARVESTER 2600	Kverneland
Dato: / Date: 02-06	Enhet / Unit: RULLESKJÆR / ROLLER DISCS	Fig nr.: 7

Ref. No.	Delenr. Part no.	Ant. Qty.	Gjenstand	Description	Anmerkning Note
1a-11	**305407**	**1**	**RULLESKJÆRARM V. KOMPL.**	**ROLLER DISC ARM LEFT, COMPL**	
1b-11	**305408**	**1**	**RULLESKJÆRARM H. KOMPL.**	**ROLLER DISC ARM, RIGHT COMPL**	
1a	321430	1	RULLESKJÆRARM V. SV.	ROLLER DISC ARM,LEFT	
1b	321431	1	RULLESKJÆRARM H.SV.	ROLLER DISC ARM,RIGHT	
2	870741	1	KULELAGER 6208-RS	BALL BEARING 6208-RS	
3	870735	1	KULELAGER 6207	BALL BEARING 6207	
4	872390	1	V-RING VA-0090	V-RING VA-0090	
5	300228	1	SKJÆRAKSEL	SHAFT	
6	868607	1	STØTTERING 35X45X2.5	SUPPORT RING 35X45X2.5	
7	868435	1	LÅSERING UTV. A35X1.5	CIRCLIP A35X1.50	
8	300231	1	DEKSEL Ø71.8	CAP Ø71.8	
9	868572	1	LÅSERING INNV. I 72X2.5	CIRCLIP I72X2.5	
10	813830	1	SEKSKANTSKRUE M16X30-8.8 ELZN	HEX. BOLT M16X30-8.80 GALV.	
10	860166	2	BRIKKE Ø17-Ø30X3 ELZN	WASHER Ø17-Ø30X3	
11	873540	1	SMØRENIPPEL M6 RETT	GREASE NIPPLE M6	
12a	305415	1	RULLESKJÆRFESTE V.	ROLLER DISC HOLDER LEFT	
12b	305416	1	RULLESKJÆRFESTE H.	ROLLER DISC HOLDER RIGHT	
13	305424	1	PARALELLARM	TOP PLATE	
14	813630	2	SEKSKANTSKRUE M12X30-8.8 ELZN	HEX. BOLT M12X30-8.8 GALV.	
15	305426	1	STILLSKRUE SV.	ADJUSTER SCREW	
16	850166	1	SEKSKANTMUTTER M16-8 ELZN.	HEX. NUT M16 GALV	
17	314512	1	FESTEHYLSE	COLLAR	
18	866280	1	SPENNHYLSE 5X30	LOCK PIN 5X30X1,0	
19	305428	1	LASK SV.	CLAMP	
20	813901	2	SEKSKANTSKRUE M16X110-8.8 ELZN	HEX. BOLT M16X110-8.8 GALV	
21	873540	1	SMØRENIPPEL M6 RETT	GREASE NIPPLE M6	
22	300249	1	RULLESKJÆR	ROLLER DISC	
23	813631	4	SEKSKANTSKRUE M12X30-10.9 ELZN	HEX. BOLT M12X30-10.9 ELZN	
23	852162	4	NYLOCKMUTTER M12 ELZN.	NYLOCK NUT M12 GALV	
25-29	**303040**	**1**	**RULLESKJÆR AVSKR. KOMPL.**	**ROLLER DISC ASSY.**	
25	303041	1	FESTEARM SV.	BRACKET	
26	813416	4	SEKSKANTSKRUE M8X16-8.8 ELZN	HEX. BOLT M8X16-8.8 GALV.	
27	303044	1	AVSKRAPER V. SV.	SCRAPER LH	
28	303045	1	AVSKRAPER H. SV.	SCRAPER RH	
29	865225	2	SPLINT 4X25 GALV.	SPLIT PIN 4 X 25	
30	867014	1	FJØRPINNE Ø4.0X75 ELZN	SPRING PIN Ø4.0X75 GALV	
40-47	**305435**	**1**	**TILBAKERULLINGSSPERRE KOMPL.**	**ROLL BACK PLATE ASSY**	
40	305436	1	TILBAKERULLINGSSPERRE	STOPPER	
41	300226	1	SPERREGUMMI SMAL	RUBBER FLAP	
42	821425	2	LÅSESKRUE M8X25-4.6 ELZN.	CARRIAGE BOLT M8X25-4.6 GALV	
42	860158	2	BRIKKE Ø8.4-17X1.6 ELZN	WASHER Ø8.4-Ø17X1.6	
42	850158	2	SEKSKANTMUTTER M8-8 ELZN.	HEX. NUT M8-8 GALV.	
43	813670	2	SEKSKANTSKRUE M12X70-8.8 ELZN	HEX. BOLT M12x70-8.8 GALV.	
43	850162	2	SEKSKANTMUTTER M12-8 ELZN.	HEX. NUT M12-8 GALV.	
43	860163	2	BRIKKE Ø13-Ø24X2.5 ELZN	WASHER Ø13-Ø24X2.5	
44	231500	2	BRIKKE Ø13.5-Ø25X5	WASHER Ø13.5-Ø25X5	
45	300227	2	SPERREGUMMI BREI	RUBBER FLAP	
46	305439	2	PARALELLSTAG 1 RAD	PARALLEL STAY ONE ROW	
47	305440	1	PARALELLSTAG, SENG	PARALLEL STAY FULL WIDTH SHARE	
50a-51	**303032**	**1**	**RULLESKJÆRAVSKRAPER V. KOMPL.**	**ROLLER SCRAPER LH ASSY**	
50b-51	**303033**	**1**	**RULLESKJÆRAVSKRAPER H. KOMPL.**	**ROLLER SCRAPER RH ASSY**	
50a	303034	1	RULLESKJÆRSKRAPER V. SV.	ROLLER SCRAPER LEFT	
50b	303035	1	RULLESKJÆRSKRAPER H. SV.	ROLLER SCRAPER RIGHT	
51	813545	1	SEKSKANTSKRUE M10X45-8.8 ELZN	HEX. BOLT M10X45-8.8 GALV	
51	860160	1	BRIKKE Ø10.5-Ø21X2 ELZN	WASHER Ø10.5-Ø21X2 GALV	
51	852160	1	NYLOCKMUTTER M10 ELZN	NYLOCK NUT M10 GALV	

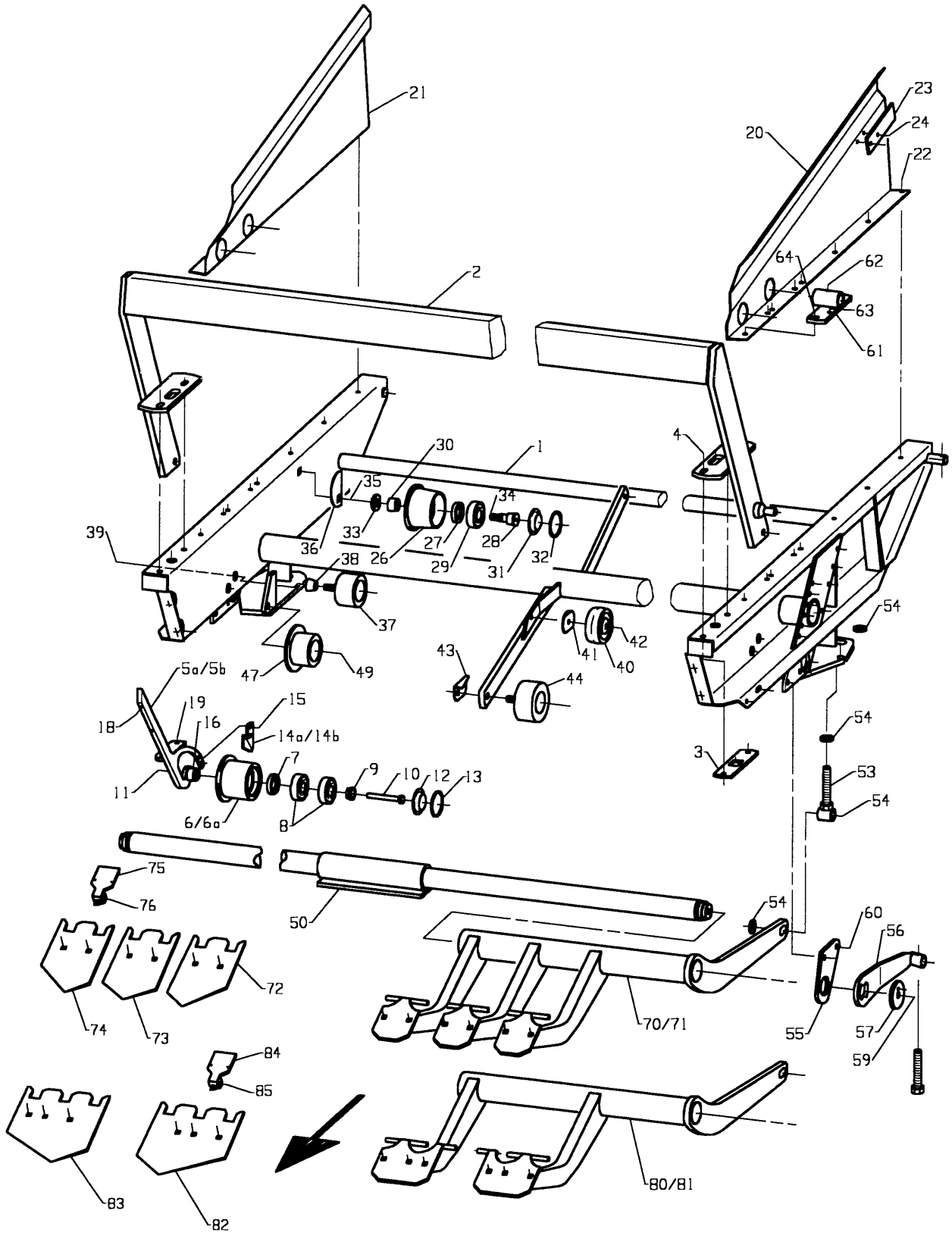
21
2
20
23
24
22
64
62
63
61
4
30
1
35
34
33
36
26
27
28
29
31
32
39
38
37
54
42
41
40
43
44
47
49
5a/5b
18
19
16
15
14a/14b
11
7
9
10
12
13
6/6a
8
3
54
53
54
75
76
50
54
60
56
72
74
73
70/71
55
57
59
84
85
83
82
80/81

Fig. 8

Utgave: / Issue: 5	Redskap: / Implement: POTETHØSTER 2600 / POTATO HARVESTER 2600	Kverneland
Dato: / Date: 02-06	Enhet / Unit: OPPTAKSORGAN / DIGGING UNIT	Fig nr.: 8

Ref. No.	Delenr. Part no.	Ant. Qty.	Gjenstand	Description	Anmerkning Note
1	321450	1	INNTAKSRAMME	DIGGING UNIT FRAME	
2	321460	1	RULLESKJÆRBOM SV.	ROLLER DISC BEAM	
3	300559	2	LASK	301144	
4	813640	4	SEKSKANTSKRUE M12X40-8.8 ELZN	HEX. BOLT M12X40-8.8 GALV	
4	852162	4	NYLOCKMUTTER M12 ELZN.	NYLOCK NUT M12 GALV	
4	860163	4	BRIKKE Ø13-Ø24X2.5 ELZN	WASHER Ø13-Ø24X2.5	
5a-17	**300551**	**1**	**VENDERULL KOMPL. H.**	**BELT ROLLER RIGHT ASSY.**	
5b-17	**300552**	**1**	**VENDERULL KOMPL. V.**	**BELT ROLLER LEFT ASSY.**	
5a	300415	1	VENDERULLFESTE H.	BELT ROLLER BRACKET RIGHT	
5b	300416	1	VENDERULLFESTE V.	BELT ROLLER BRACKET LEFT	
6	300556	1	RULL KOMPL.	ROLLER ASSY	
7	871356	2	TETNINGSRING 3556/10	OIL SEAL MIM 3556	
8	870830	2	KULELAGER 6306	BALL BEARING 6306	
9	300557	1	BØSSING Ø13X13-Ø30/8	BUSHING Ø13X13-Ø30/8	
10	813690	1	SEKSKANTSKRUE M12X90-8.8 ELZN	HEX. BOLT M12X90 8.8	
11	852162	1	NYLOCKMUTTER M12 ELZN.	NYLOCK NUT M12 GALV	
12	300231	1	DEKSEL Ø71.8	CAP Ø71.8	
13	868572	1	LÅSERING INNV. I 72X2.5	CIRCLIP I72X2.5	
14a	300554	1	AVSKRAPER H.	BELT ROLLER SCRAPER RIGHT	
14b	300555	1	AVSKRAPER V.	BELT ROLLER SCRAPER LEFT	
15	813430	2	SEKSKANTSKRUE M8X30-8.8 ELZN	HEX. BOLT M8X30-8.8 GALV.	
15	860158	2	BRIKKE Ø8.4-17X1.6 ELZN	WASHER Ø8.4-Ø17X1.6	
15	852158	2	NYLOCKMUTTER M8 ELZN.	NYLOCK NUT M8 GALV.	
16	873540	1	SMØRENIPPEL M6 RETT	GREASE NIPPLE M6 STRAIGHT	
17	813520	2	SEKSKANTSKRUE M10X20-8.8 ELZN	HEX. BOLT M10X20-8.8 GALV.	
18	813530	4	SEKSKANTSKRUE M10X30-8.8 ELZN	HEX. BOLT M10X30-8.8 GALV.	
18	860160	4	BRIKKE Ø10.5-Ø21X2 ELZN	WASHER Ø10.5-Ø21X2	
19	813525	4	SEKSKANTSKRUE M10X25-8.8 ELZN	HEX. BOLT M10X25-8.8 GALV.	
19	852160	4	NYLOCKMUTTER M10 ELZN.	NYLOCK NUT M10 GALV.	
19	860160	4	BRIKKE Ø10.5-Ø21X2 ELZN	WASHER Ø10.5-Ø21X2	
20	300564	1	SKJERM V.	LIFTING UNIT GUARD LEFT	
21	300565	1	SKJERM H.	LIFTING UNIT GUARD RIGHT	
22	813520	6	SEKSKANTSKRUE M10X20-8.8 ELZN	HEX. BOLT M10X20-8.8 GALV.	
22	852160	6	NYLOCKMUTTER M10 ELZN.	NYLOCK NUT M10 GALV.	
23	300566	2	STØTTESKINNE	GUARD SUPPORT BAR	
24	821420	4	LÅSESKRUE M8X20-4.6 ELZN.	CARRIAGE BOLT M8X20-4.6 GALV.	
24	852158	4	NYLOCKMUTTER M8 ELZN.	NYLOCK NUT M8 GALV.	
24	860164	4	BRIKKE Ø15-Ø28X3 ELZN	WASHER Ø15-Ø28X3	
26-35	**310752**	**2**	**BELTERULL KOMPL.**	**BELT ROLLER ASSY**	
26	300401	1	RULL	BELT ROLLER	
27	871356	1	TETNINGSRING 3556/10	OIL SEAL MIM 3556	
28	310753	1	AKSEL	SHAFT	
29	870830	1	KULELAGER 6306	BALL BEARING 6306	
30	310755	1	HYLSE Ø20-Ø35X20	SPACER Ø20-Ø35X20	
31	300231	1	DEKSEL Ø71.8	CAP Ø71.8	
32	868572	1	LÅSERING INNV. I 72X2.5	CIRCLIP I72X2.5	
33	300521	1	KLEMSKIVE	WASHER	
34	873545	1	SMØRENIPPEL M8X1.25 RETT	GREASE NIPPLE M8X1.25	
35	850166	1	SEKSKANTMUTTER M16-8 ELZN.	HEX. NUT M16 GALV	
36	300563	2	DEKKPLATE	COVER PLATE	
37	301144	2	STØTTERULL Ø90 M/GUMMI KOMPL.	RUBBERCOATED SUPPORT ROLLER 90	
38	300522	2	AVSTANDSKON	CONICAL SPACER	
39	860166	2	BRIKKE Ø17-Ø30X3 ELZN	WASHER Ø17-Ø30X3	
39	850166	2	SEKSKANTMUTTER M16-8 ELZN.	HEX. NUT M16 GALV	
40	255692	2	PLASTHJUL Ø100 M/KULEL.OG TETN	ROLLER Ø100 W/BALL BEARING	
41	300642	1	DEKKPLATE	COVER PLATE	
42	813570	2	SEKSKANTSKRUE M10X70-8.8 ELZN	HEX. BOLT M10X70-8.8 GALV.	

Kverneland

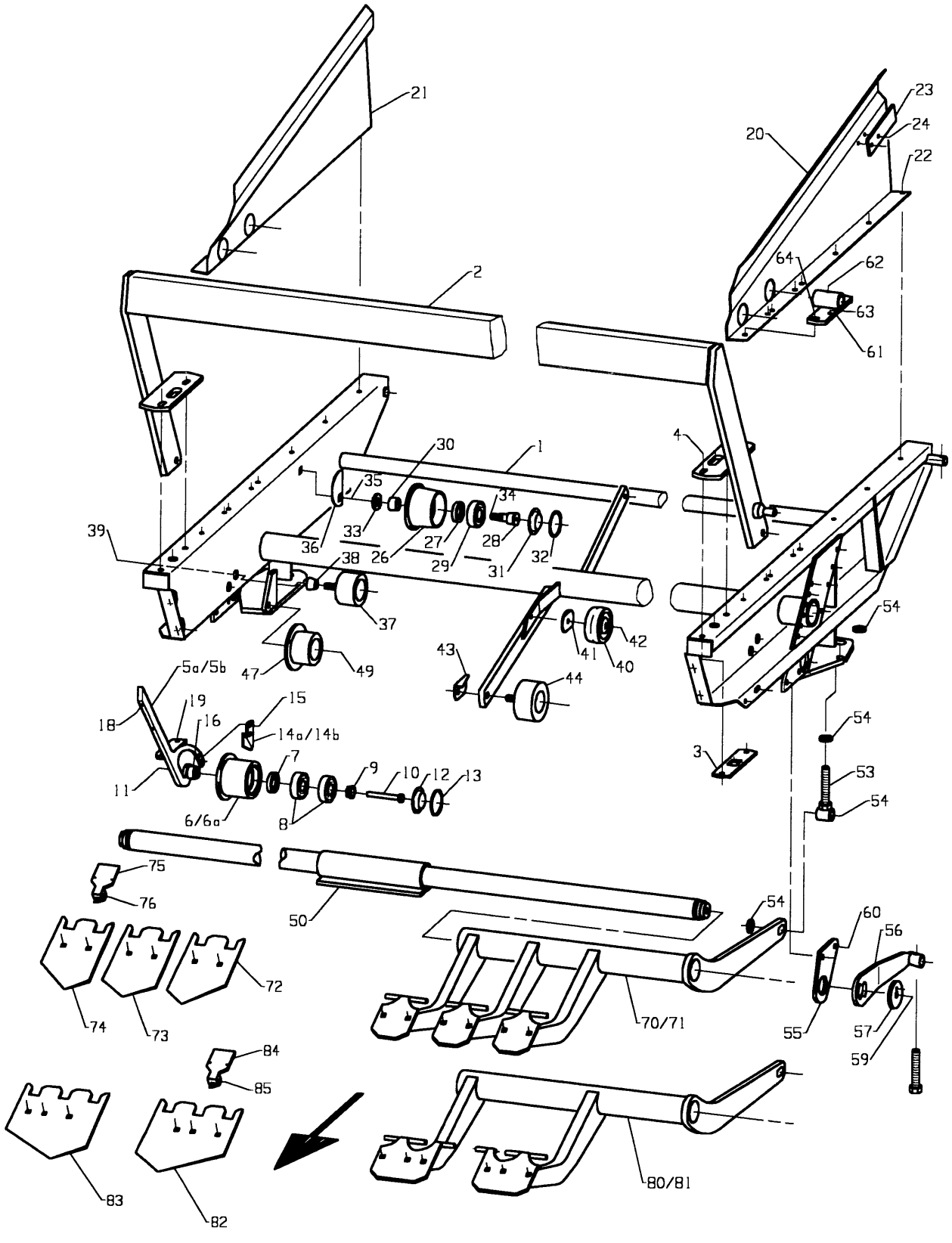

Fig. 8

Utgave: / Issue: 5	Redskap: / Implement: POTETHØSTER 2600 / POTATO HARVESTER 2600	Kverneland
Dato: / Date: 02-06	Enhet / Unit: OPPTAKSORGAN / DIGGING UNIT	Fig nr.: 8

Ref. No.	Delenr. Part no.	Ant. Qty.	Gjenstand	Description	Anmerkning Note
42	850160	2	SEKSKANTMUTTER M10-8 ELZN.	HEX. NUT M10-8 GALV.	
43	300524	1	STEINSTOPPER	STONE EJECTOR	
44	301545	1	BELTERULL Ø110 M/GUMMI KOMPL.	RUBBER COATED BELT ROLLER Ø110	
45	850166	1	SEKSKANTMUTTER M16-8 ELZN.	HEX. NUT M16 GALV	
46	300520	4	BRIKKE Ø17-Ø40X5 GALV	WASHER Ø17-Ø40X5	
47-48	**301145**	**2**	**FLENSRULL Ø90 M/GUMMI KOMPL.**	**RUBBERCOATED ROLLER Ø90 FLANGE**	
47	255691	1	PLASTHJUL Ø100 M/KULELAGER	ROLLER Ø100 W/BALL BEARING	
48	255690	2	TETNINGSBRIKKE	SEAL	
49	813890	2	SEKSKANTSKRUE M16X90-8.8 ELZN	HEX. BOLT M16X90-8.8 GALV	
49	860166	2	BRIKKE Ø17-Ø30X3 ELZN	WASHER Ø17-Ø30X3	
49	852166	2	NYLOCKMUTTER M16 ELZN.	NYLOCK NUT M16 GALV	
50	321416	1	SKJÆRAKSEL SV.	DISC BEAM	
53	321424	2	STILLSKRUE SV.	ADJUSTMENT BOLT	
54	814080	2	SEKSKANTSKRUE M20X80-8.8 ELZN	HEX.BOLT M20X80-8.8	
54	860170	8	BRIKKE Ø21-Ø37X3 ELZN	WASHER Ø21-Ø37X3	
54	850170	6	SEKSKANTMUTTER M20-8 ELZN.	HEX. NUT M20 GALV	
55	321484	2	FESTE	BRACKET	
56	321482	2	ARM SV.	ARM	
57	440288	2	BRIKKE Ø17-Ø76X8	WASHER	
58	860166	2	BRIKKE Ø17-Ø30X3 ELZN	WASHER Ø17-Ø30X3	
58	813846	2	SEKSKANTSKRUE M16X45-12.9 ELZN	HEX.BOLT M16X45-12.9	
59	813830	2	SEKSKANTSKRUE M16X30-8.8 ELZN	HEX. BOLT M16X30-8.80 GALV.	
60	813630	4	SEKSKANTSKRUE M12X30-8.8 ELZN	HEX. BOLT M12X30-8.8 GALV.	
60	852162	4	NYLOCKMUTTER M12 ELZN.	NYLOCK NUT M12 GALV	
61	300731	2	LAGERBUKK SV.	BEARING HOUSING	
62	873540	2	SMØRENIPPEL M6 RETT	GREASE NIPPLE M6 STRAIGHT	
63	813520	2	SEKSKANTSKRUE M10X20-8.8 ELZN	HEX. BOLT M10X20-8.8 GALV.	
64	813530	4	SEKSKANTSKRUE M10X30-8.8 ELZN	HEX. BOLT M10X30-8.8 GALV.	
64	852160	4	NYLOCKMUTTER M10 ELZN.	NYLOCK NUT M10 GALV.	
64	860160	4	BRIKKE Ø10.5-Ø21X2 ELZN	WASHER Ø10.5-Ø21X2	
70	321425	1	SKJÆRGAFFEL V.SV.	DIGGING SHARE FORK LH	
71	321426	1	SKJÆRGAFFEL H.SV.	DIGGING SHARE UNIT RH	
72	300620	2	SKJÆRPLATE VENSTRE	DIGGING SHARE BLADE LEFT	
73	300622	2	SKJÆRPLATE MIDTRE	CENTRE DIGGING SHARE BLADE	
74	300621	2	SKJÆRPLATE HØGRE	DIGGING SHARE BLADE RIGHT	
75	300419	6	SKJÆRKLAFF	DIGGING SHARE FINGER	
76	823525	6	PLOGSKRUE M10X25 8.8 ELZN.	PLOUGH BOLT M10X25 8.8 GALV.	
76	860160	6	BRIKKE Ø10.5-Ø21X2 ELZN	WASHER Ø10.5-Ø21X2	
76	850160	6	SEKSKANTMUTTER M10-8 ELZN.	HEX. NUT M10-8 GALV.	
80	321412	1	SKJÆRGAFFEL 2-DELT V. SV.	DIGGING 2-ARM SHARE FORK LH	
81	321413	1	SKJÆRGAFFEL 2-DLET H. SV.	DIGIING 2-ARM SHARE FORK RH	
82	303609	1	SKJÆRPLATE VENSTRE	DIGGING SHARE BLADE LEFT	
83	303608	2	SKJÆRPLATE HØYRE	DIGGING SHARE BLADE RIGHT	
84	300419	6	SKJÆRKLAFF	DIGGING SHARE FINGER	
85	823525	6	PLOGSKRUE M10X25 8.8 ELZN.	PLOUGH BOLT M10X25 8.8 GALV.	
85	860160	6	BRIKKE Ø10.5-Ø21X2 ELZN	WASHER Ø10.5-Ø21X2	
85	850160	6	SEKSKANTMUTTER M10-8 ELZN.	HEX. NUT M10-8 GALV.	

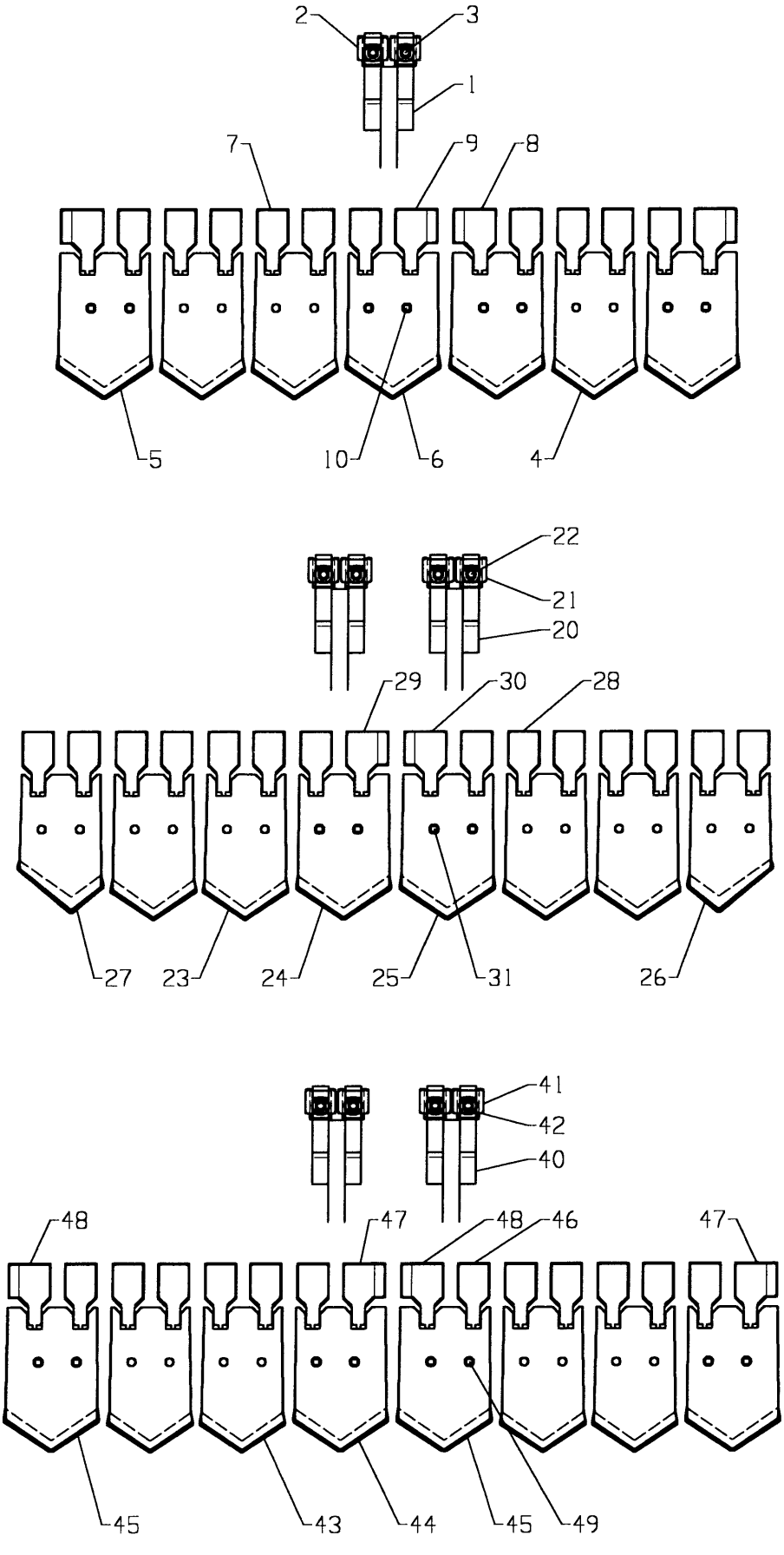
2
3
1
7
9
8
5
10
6
4
22
21
20
29
30
28
27
23
24
25
31
26
41
42
40
48
47
48
46
47
45
43
44
45
49

Fig. 9

Utgave: / Issue: 5	Redskap: / Implement: POTETHØSTER 2600 / POTATO HARVESTER 2600	Kverneland
Dato: / Date: 02-06	Enhet / Unit SKJÆR FOR SENG ETC. / FULL WIDTH SHARE	Fig nr.: 9

Ref. No.	Delenr. Part no.	Ant. Qty.	Gjenstand	Description	Anmerkning Note
			SKJÆR FOR SENG 130CM (75-80CM)	**FULL WIDTH SHARE 130CM(75-80CM)**	**130CM**
1	319975	1	SKJÆRARM M. 2 FESTER SV.	ARM	
2	305384	2	KLEMSTYKKE	CLAMP	
3	813860	2	SEKSKANTSKRUE M16X60-8.8 ELZN	HEX. BOLT M16X60-8.8 GALV	
3	305383	2	BRIKKE Ø17-Ø32X5 HERDET	WASHER Ø17-Ø32X5 HARDENED	
4	300622	3	SKJÆRPLATE MIDTRE	CENTRE DIGGING SHARE BLADE	
5	303615	2	SKJÆRPLATE VENSTRE	SHARE PLATE LEFT	
6	303616	2	SKJÆRPLATE HØYRE	SHARE PLATE RIGHT	
7	300419	10	SKJÆRKLAFF	DIGGING SHARE FINGER	
8	303617	2	BREI SKJÆRKLAFF VENSTRE	DIGGING SHARE FINGER LEFT	
9	303618	2	BREI SKJÆRKLAFF HØGRE	DIGGING SHARE FINGER RIGHT	
10	823525	14	PLOGSKRUE M10X25 8.8 ELZN	PLOUGH BOLT M10X25 8.8 GALV	
10	860160	14	BRIKKE Ø10.5-Ø21X2 ELZN	WASHER Ø10.5-Ø21X2 GALV	
10	850160	14	SEKSKANTMUTTER M10-8 ELZN	HEX. NUT M10-8 GALV	
			SKJÆR FOR SENG 142CM (85CM)	**FULL WIDTH SHARE 142CM (85CM)**	**142CM**
20	311975	1	SKJÆRARM M. 2 FESTER SV.	ARM	
21	305384	4	KLEMSTYKKE	CLAMP	
22	813860	4	SEKSKANTSKRUE M16X60-8.8 ELZN	HEX. BOLT M16X60-8.8 GALV	
22	305383	4	BRIKKE Ø17-Ø32X5 HERDET	WASHER Ø17-Ø32X5 HARDENED	
23	300622	4	SKJÆRPLATE MIDTRE	CENTRE DIGGING SHARE BLADE	
24	303615	1	SKJÆRPLATE VENSTRE	SHARE PLATE LEFT	
25	303616	1	SKJÆRPLATE HØGRE	SHARE PLATE RIGHT	
26	300620	1	SKJÆRPLATE VENSTRE	SHARE PLATE LEFT	
27	300621	1	SKJÆRPLATE HØGRE	SHARE PLATE RIGHT	
28	300419	14	SKJÆRKLAFF	DIGGING SHARE FINGER	
29	303617	1	BREI SKJÆRKLAFF VENSTRE	DIGGING SHARE FINGER LEFT	
30	303618	1	BREI SKJÆRKLAFF HØGRE	DIGGING SHARE FINGER RIGHT	
31	823525	16	PLOGSKRUE M10X25 8.8 ELZN	PLOUGH BOLT M10X25 8.8 GALV	
31	860160	16	BRIKKE Ø10.5-Ø21X2 ELZN	WASHER Ø10.5-Ø21X2 GALV	
31	850160	16	SEKSKANTMUTTER M10-8 ELZN	HEX. NUT M10-8 GALV	
			SKJÆR FOR SENG 146CM (90CM)	**FULL WIDTH SHARE 146CM (90CM)**	**146CM**
40	319975	2	SKJÆRARM M.2 FESTER SV.	ARM	
41	305384	4	KLEMSTYKKE	CLAMP	
42	813860	4	SEKSKANTSKRUE M16X60-8.8 ELZN	HEX. BOLT M16X60-8.8 GALV	
42	305383	4	BRIKKE Ø17-Ø32X5 HERDET	WASHER Ø17-Ø32X5 HARDENED	
43	300622	4	SKJÆRKLAFF MIDTRE	CENTRE DIGGING SHARE BLADE	
44	303615	2	SKJÆRPLATE VENSTRE	SHARE PLATE LEFT	
45	303616	2	SKJÆRPLATE HØGRE	SHARE PLATE RIGHT	
46	300419	12	SKJÆRKLAFF	DIGGING SHARE FINGER	
47	303617	2	BREI SKJÆRKLAFF VENSTRE	DIGGING SAHRE FINGER LEFT	
48	303618	2	BREI SKJÆRKLAFF HØGRE	DIGGING SHARE FINGER RIGHT	
49	823525	16	PLOGSKRUE M10X25 8.8 ELZN	PLOUGH BOLT M10X25 8.8 GALV	
49	860160	16	BRIKKE Ø10.5-Ø21X2 ELZN	WASHER Ø10.5-Ø21X2 GALV	
49	850160	16	SEKSKANTSKRUE M10-8 ELZN	HEX. NUT M10-8 GALV	

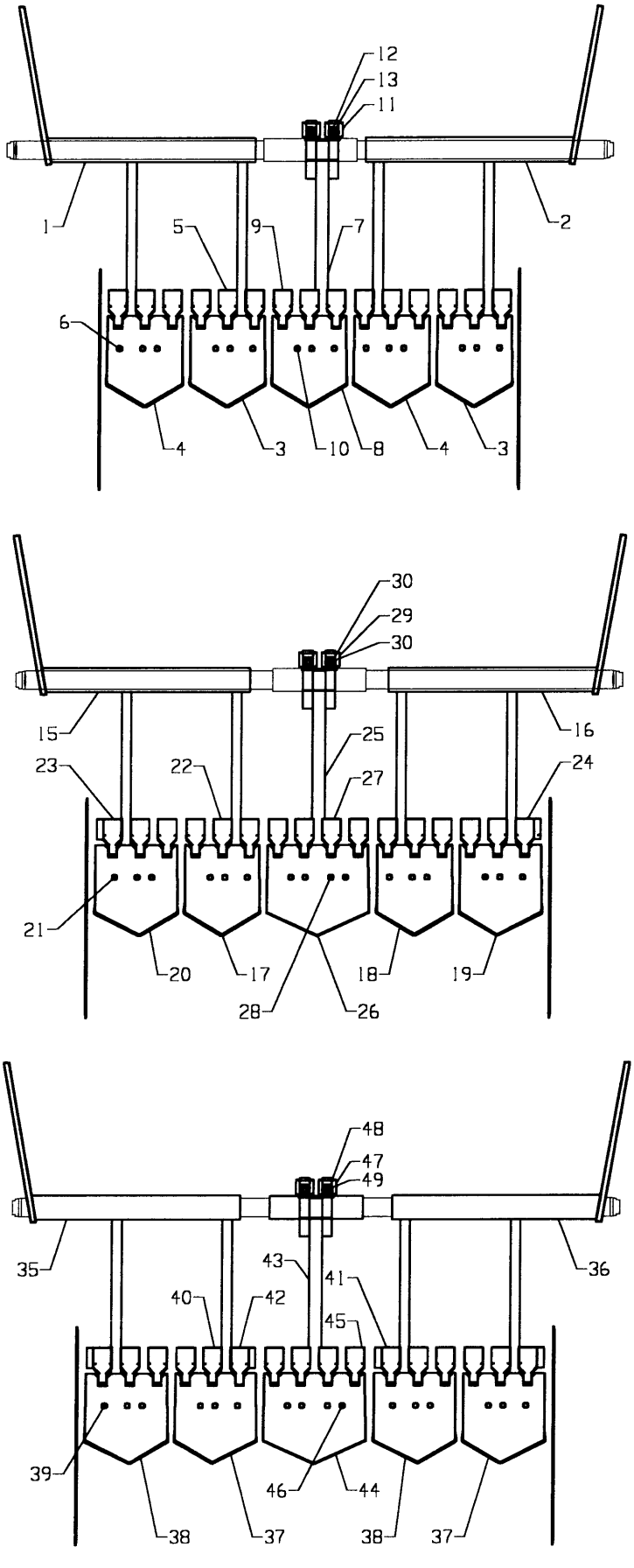
12
13
11
1
5
9
7
2
6
4
3
10
8
4
3
30
29
30
15
25
16
23
22
27
24
21
20
17
18
19
28
26
48
47
49
35
43
41
36
40
42
45
39
46
44
38
37
38
37

Fig. 10

Utgave: / Issue: 5	Redskap: / Implement: POTETHØSTER 2600 / POTATO HARVESTER 2600	Kverneland
Dato: / Date: 02-06	Enhet / Unit: SKJER 2-DELT FULLBREDDE / FULL WIDTH 2-PIECE SHARE	Fig nr.: 10

Ref. No.	Delenr. Part no.	Ant. Qty.	Gjenstand	Description	Anmerkning Note
	321392	**1**	**SKJÆR 2-DELT FULLBREDDE 75CM**	**FULL WIDTH 2-PIECE SHARE 75CM**	
1	321412	1	SKJÆRGAFFEL 2-DELT V. SV.	DIGGING 2-ARM SHARE FORK LH	
2	321413	1	SKJÆRGAFFEL 2-DELT H. SV.	DIGGING 2-ARM SHARE FORK RH	
3	319991	2	SKJÆRPLATE FOR SENG V.	DIGGER SHARE BLADE FOR BED LH	
4	319992	2	SKJÆRPLATE FOR SENG H.	DIGGER SHARE BLADE FOR BED RH	
5	300419	12	SKJÆRKLAFF	DIGGING SHARE FINGER	
6	823525	12	PLOGSKRUE M10X25 8.8 ELZN	PLOUGH BOLT M10X25 8.8 GALV	
6	860160	12	BRIKKE Ø10,5-Ø21X2 ELZN	WASHER Ø10,5-Ø21X2 GALV	
6	850160	12	SEKSKANTMUTTER M10-8 ELZN	HEX. NUT M10-8 GALV	
7-12	**319995**	**1**	**MIDTSKJÆR 750-800 KOMPL.**	**DIGGER CENTRE SHARE FOR BED**	**750-800**
7	319967	1	SKJÆRARM MIDT 750-800 SV.	DIGGING CENTRE SHARE ARM	750-800
8	319992	1	SKJÆRPLATE FOR SENG H.	DIGGER SHARE PLATE FOR BED	
9	300419	3	SKJÆRKLAFF	DIGGING SHARE FINGER	
10	823525	3	PLOGSKRUE M10X25 8.8 ELZN	PLOUGH BOLT M10X25 8.8 GALV	
10	860160	3	BRIKKE Ø10.5-Ø21X2 ELZN	WASHER Ø10.5-Ø21X2 GALV	
10	850160	3	SEKSKANTMUTTER M10-8 ELZN	HEX. NUT M10-8 GALV	
11	305384	2	KLEMSTYKKE	CLAMP	
12	305383	2	BRIKKE Ø17-Ø32X5 HERDET	WASHER Ø17-Ø32X5 HARDENED	
13	813860	2	SEKSKANTSKRUE M16X60-8.8 ELZN	HEX. BOLT M16X60-8.8 GALV	
	321394	**1**	**SKJÆR 2-DELT FULLBREDDE 85CM**	**FULL WIDTH 2-PIECE SHARE 85CM**	
15	321412	1	SKJÆRGAFFEL 2-DELT V. SV.	DIGGING 2-ARM SHARE FORK LH	
16	321413	1	SKJÆRGAFFEL 2-DELT H. SV.	DIGGING 2-ARM SHARE FORK RH	
17	319991	1	SKJÆRPLATE FOR SENG V.	DIGGER SHARE BLADE FOR BED LH	
18	319992	1	SKJÆRPLATE FOR SENG H.	DIGGER SHARE BLADE FOR BED RH	
19	319988	1	SKJÆRPLATE BRED FOR SENG V.	DIGGER SHARE WIDE FOR BED LH	
20	319989	1	SKJÆRPLATE BRED FOR SENG H.	DIGGER SHARE WIDE FOR BED RH	
21	823525	12	PLOGSKRUE M10X25 8.8 ELZN	PLOUGH BOLT M10X25 8.8 GALV	
21	860160	12	BRIKKE Ø10.5-Ø21X2 ELZN	WASHER Ø10.5-Ø21X2 GALV	
21	850160	12	SEKSKANTMUTTER M10-8 ELZN	HEX. NUT M10-8 GALV	
22	300419	10	SKJÆRKLAFF	DIGGING SHARE FINGER	
23	303617	1	BRED SKJÆRKLAFF V.	DIGGING SHARE FINGER LH	
24	303618	1	BRED SKJÆRKLAFF H.	DIGGING SHARE FINGER RH	
25-31	**319981**	**1**	**MIDTSKJÆR 850-900 KOMPL.**	**DIGGER CENTRE SHARE FOR BED**	**850-900**
25	319969	1	SKJÆRARM MIDT 850-900 SV.	DIGGING CENTRE SHARE ARM	850-900
26	319986	1	SKJÆRPLATE MIDT 850-900	DIGGING CENTRE SHARE ARM	
27	300419	4	SKJÆRKLAFF	DIGGING SHARE FINGER	
28	823525	4	PLOGSKRUE M10X25 8.8 ELZN	PLOUGH BOLT M10X25 8.8 GALV	
29	305384	2	KLEMSTYKKE	CLAMP	
30	813860	2	SEKSKANTSKRUE M16X60-8.8 ELZN	HEX. BOLT M16X60-8.8 GALV	
30	305383	2	BRIKKE Ø17-Ø32X5 HERDET	WASHER Ø17-Ø32X5 HARDENED	
31	860160	4	BRIKKE Ø10.5-Ø21X2 ELZN	WASHER Ø10.5-Ø21X2 GALV	
31	850160	4	SEKSKANTSKRUE M10-8 ELZN	HEX. BOLT M10-8 GALV	
	321395	**1**	**SKJÆR 2-DELT FULLBREDDE 90CM**	**FULL WIDTH 2-PIECE SHARE 90CM**	
35	321412	1	SKJÆRGAFFEL 2-DELT V. SV.	DIGGING SHARE FORK LH	
36	321413	1	SKJÆRGAFFEL H. SV.	DIGGING SHARE FORK RH	
37	319988	2	SKJÆRPLATE BRED FOR SENG V.	DIGGER SHARE WIDE FOR BED LH	
38	319989	2	SKJÆRPLATE BRED FOR SENG H.	DIGGER SHARE WIDE FOR BED RH	
39	823525	12	PLOGSKRUE M10X25 8.8 ELZN	PLOUGH BOLT M10X25 8.8 ELZN	
39	860160	12	BRIKKE Ø10.5-Ø21X2 ELZN	WASHER Ø10.5-Ø21X2 GALV	
39	850160	12	SEKSKANTMUTTER M10-8 ELZN.	HEX. NUT M10-8 GALV	
40	300419	8	SKJÆRKLAFF	DIGGING SHARE FINGER	
41	303617	2	BREI SKJÆRKLAFF V.	DIGGING SHARE FINGER LH	
42	303618	2	BREI SKJÆRKLAFF H.	DIGGING SHARE FINGER RH	
43-49	**319968**	**1**	**MIDTSKJÆR 850-900 KOMPL.**	**DIGGER CENTRE SHARE FOR BED**	**850-900**
43	319969	1	SKJÆRARM MIDT 850-900 SV.	DIGGING CENTRE SHARE ARM	850-900
44	319986	1	SKJÆRPLATE MIDT 850-900	DIGGING CENTRE SHARE ARM	
45	300419	4	SKJÆRKLAFF	DIGGING SHARE FINGER	

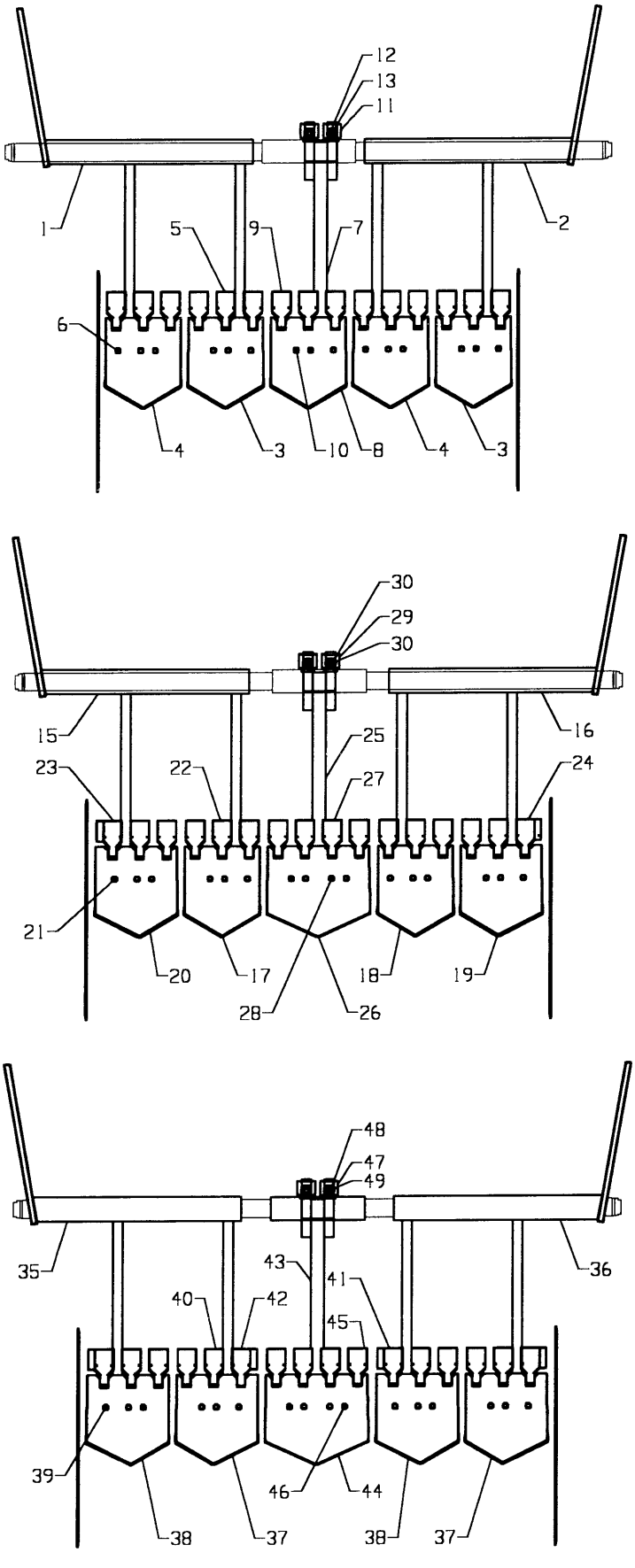
12
13
11
1
5
9
7
2
6
4
3
10
8
4
3
30
29
30
15
16
25
23
22
27
24
21
20
17
18
19
28
26
48
47
49
35
43
41
36
40
42
45
39
46
44
38
37
38
37

Fig. 10

Utgave: / Issue: 5	Redskap: / Implement: POTETHØSTER 2600 / POTATO HARVESTER 2600	Kverneland
Dato: / Date: 02-06	Enhet / Unit: SKJER 2-DELT FULLBREDDE / FULL WIDTH 2-PIECE SHARE	Fig nr.: 10

Ref. No.	Delenr. Part no.	Ant. Qty.	Gjenstand	Description	Anmerkning Note
46	823525	4	PLOGSKRUE M10X25 8.8 ELZN	PLOUGH BOLT M10X25 8.8 GALV	
47	305384	2	KLEMSTYKKE	CLAMP	
48	813860	2	SEKSKANTSKRUE M16X60-8.8 ELZN	HEX. BOLT M16X60-8.8 GALV	
48	305383	2	BRIKKE Ø17-Ø32X5 HERDET	WASHER Ø17-Ø32X5 HARDENED	
49	860160	4	BRIKKE Ø10.5-Ø21X2 ELZN	WASHER Ø10.5-Ø21X2 GALV	
49	860160	4	SEKSKANTMUTTER M10-8 ELZN	HEX. NUT M10-8 GALV	

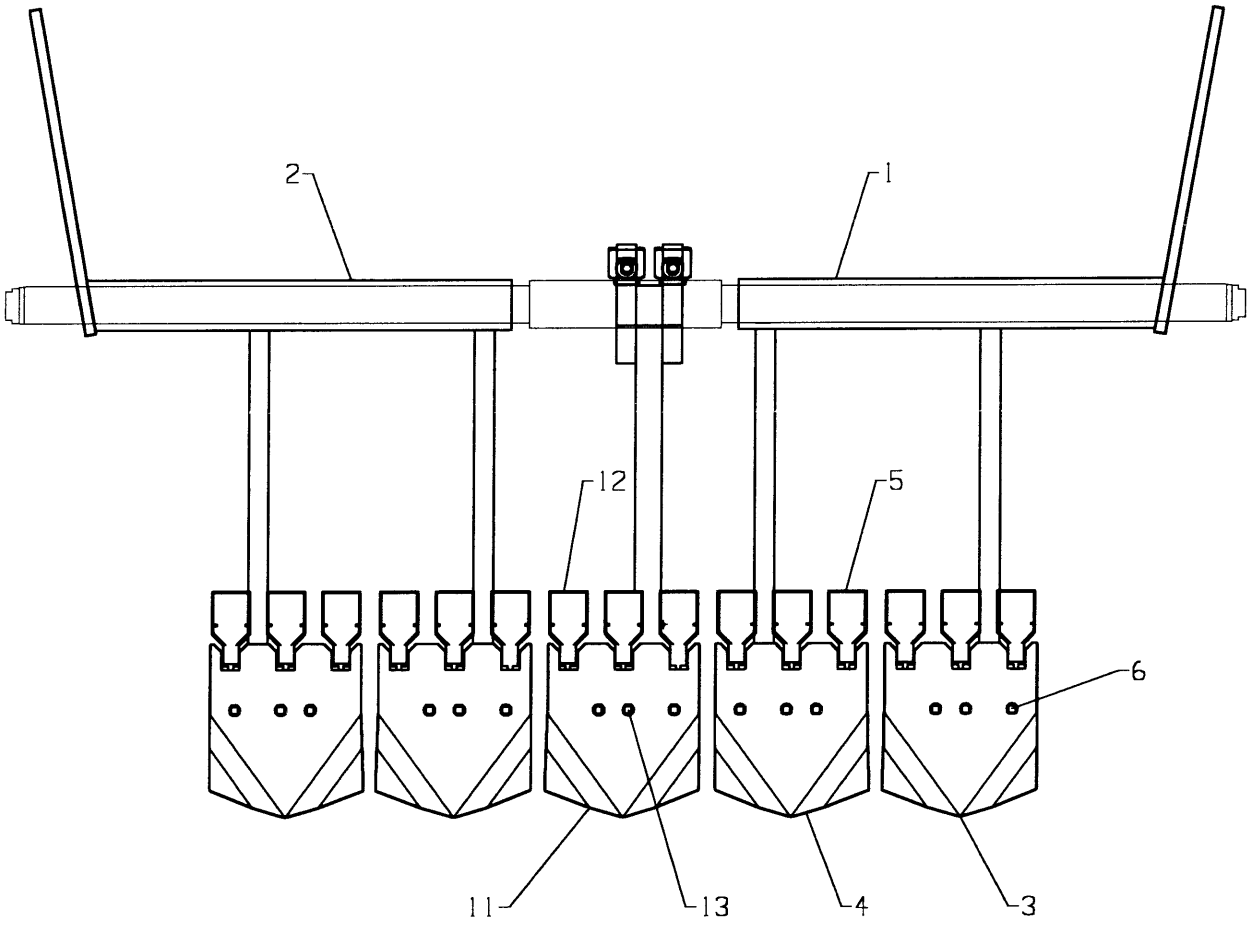

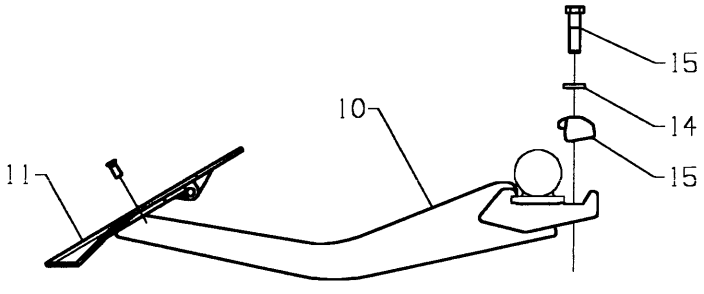

Fig. 11

Utgave: / Issue: 5	Redskap: / Implement: POTETHØSTER 2600 / POTATO HARVESTER 2600	Kverneland
Dato: / Date: 02-06	Enhet / Unit: SKJER FLAT BUNN / FLAT BOTTOM CENTRE SHARE FOR BED	Fig nr.: 11

Ref. No.	Delenr. Part no.	Ant. Qty.	Gjenstand	Description	Anmerkning Note
1	321412	1		DIGGING 2-ARM SHARE FORK LH	
2	321413	1		DIGGING 2-ARM SHARE FORK RH	
3	321381	2		SHARE PLATE LH	
4	321382	2		SHARE PLATE RH	
5	300419	12		DIGGING SHARE FINGER	
6	823525	12		PLOUGH BOLT M10X25 8.8 GALV	
6	860160	12		WASHER Ø10.5-Ø21X2	
10	319967	1		DIGGER CENTRE SHARE ARM 750-800	
11	321382	1		SHARE PLATE RH	
12	300419	3		DIGGING SHARE FINGER	
13	823525	3		PLOUGH BOLT M10X25 8.8 GALV	
13	850160	3		HEX NUT M10-8 GALV	
14	305384	2		CLAMP	
15	305383	2		WASHER Ø17-Ø35X5 HARDENED	
15	813860	2		HEX. BOLT M16X60-8.8 GALV	

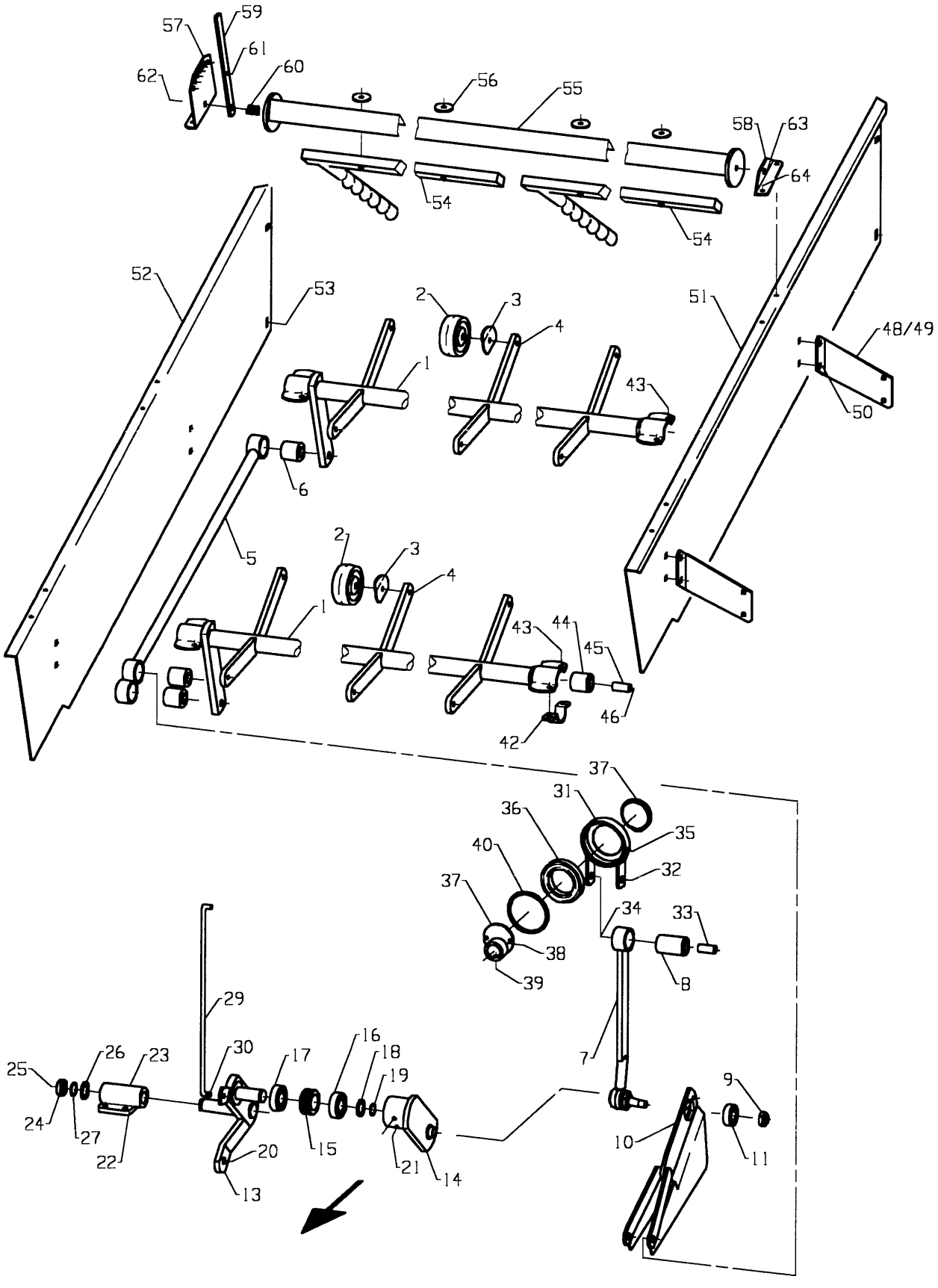
57
59
61
62
60
56
55
58
63
64
54
54
52
53
2
3
4
51
48/49
1
43
50
6
5
2
3
4
1
43
44
45
46
42
37
31
36
35
40
32
37
34
33
38
8
39
29
7
25
26
23
30
17
16
18
19
9
24
27
22
20
15
21
14
10
11
13

Fig. 12

Utgave: / Issue: 5	Redskap: / Implement: POTETHØSTER 2600 / POTATO HARVESTER 2600	Kverneland
Dato: / Date: 02-06	Enhet / Unit: SÅLDERENNE M/MEK.SKAKING / LIFTING ELEVATOR W/BELT AGITATOR	Fig nr.: 12

Ref. No.	Delenr. Part no.	Ant. Qty.	Gjenstand	Description	Anmerkning Note
1-40	**321610**	**1**	**BELTESKAKER KPL.**	**WEB AGITATOR ASSY**	
1-4	**321612**	**2**	**SKAKEAKSEL KPL.**	**AGITATOR ASSY**	
1	321613	1	SKAKEAKSEL SV.	AGITATOR AXLE	
2	255692	6	PLASTHJUL Ø100 M/KULEL.OG TETN	ROLLER Ø100 W/BALL BEARING	
2a	255691	1	PLASTHJUL Ø100 M/KULELAGER	ROLLER Ø100 W/BALL BEARING	
2b	255690	2	TETNINGSBRIKKE	SEAL	
3	300642	6	DEKKPLATE	COVER PLATE	
4	813570	6	SEKSKANTSKRUE M10X70-8.8 ELZN	HEX. BOLT M10X70-8.8 GALV.	
4	852160	6	NYLOCKMUTTER M10 ELZN.	NYLOCK NUT M10 GALV.	
5-6	**300760**	**1**	**SKAKESTAG KOMPL.**	**AGITATOR STAY ASSY**	
5	300761	1	SKAKESTAG SV.	AGITATOR STAY	
6	300644	3	GUMMIOPPHENG Ø45-20X46	ELASTIC BUSHING Ø45-20X46	
7-8	**321618**	**1**	**KULESTAG KPL.**	**STAY ASSY**	
7	321619	1	KULESTAG SV.	STAY	
8	300646	1	GUMMIOPPHENG Ø45-20X70	ELASTIC BUSHING Ø45-20X70	
9	300769	1	KULEMUTTER	NUT	
10	300770	1	SKAKESTAG M/LAGER	AGITATOR STAY ASSY	
10	300771	1	SKAKESTAG SV.	AGITAOR STAY	
11	870727	1	KULELAGER 6205-2RS	BALL BEARING 6205-2RS	
12	813880	3	SEKSKANTSKRUE M16X80-8.8 ELZN	HEX. BOLT M16X80-8.8 GALV	
12	852166	3	NYLOCKMUTTER M16 ELZN.	NYLOCK NUT M16 GALV	
13-27	**300792**	**1**	**SKAKESTILLER KOMPL.**	**AGITATOR LEVER ASSY**	
13	300775	1	SKAKESTILLER SV.	AGITATOR LEVER	
14	300781	1	VIPPEARM SV.	AGITATOR ADJUSTING ARM	
15	300786	1	RING	RING	
16	870730	1	KULELAGER 6206	BALL BEARING 6206	
17	870731	1	KULELAGER 6206-RS	BALL BEARING 6206-RS	
18	868606	1	STØTTERING 30X42X2.5	SUPPORT RING 30X42X2.5	
19	868430	1	LÅSERING UTV. A30X1.50	CIRCLIP A30X1.50	
20	813420	2	SEKSKANTSKRUE M8X20-8.8 ELZN	HEX. BOLT M8X20-8.8 GALV	
20	850158	2	SEKSKANTMUTTER M8-8 ELZN.	HEX. NUT M8-8 GALV.	
21	873545	1	SMØRENIPPEL M8X1.25 RETT	GREASE NIPPLE M8X1.25	
22	311553	1	LAGERBOSS	BEARING HOUSING	
23	873544	1	SMØRENIPPEL M6-90GR.	GREASE NIPPLE M6-90DEG	
24	300785	1	ENDEBRAKETT	BRACKET	
25	813625	1	SEKSKANTSKRUE M12X25-8.8 ELZN	HEX. BOLT M12X25-8.8 GALV	
26	868606	1	STØTTERING 30X42X2.5	SUPPORT RING 30X42X2.5	
27	868430	1	LÅSERING UTV. A30X1.50	CIRCLIP A30X1.50	
28	813570	2	SEKSKANTSKRUE M10X70-8.8 ELZN	HEX. BOLT M10X70-8.8 GALV.	
28	852160	2	NYLOCKMUTTER M10 ELZN.	NYLOCK NUT M10 GALV.	
29	321623	1	INDIKATORSTANG	STAY	
30	865270	1	SPLINT 5X20 GALV.	SPLIT PIN 5X20	
31	311511	1	LAGERHUS M.KONUSER	BEARING HOUSING Ø110-Ø81	
32	813900	1	SEKSKANTSKRUE M16X100-8.8 ELZN	HEX. BOLT M16X100-8.8 GALV.	
33	300645	1	HYLSE Ø16.1-Ø19X40	SPACER Ø16.1-Ø19X40	
34	852166	1	NYLOCKMUTTER M16 ELZN.	NYLOCK NUT M16 GALV	
35	873540	1	SMØRENIPPEL M6 RETT	GREASE NIPPLE M6 STRAIGHT	
36	870671	1	KULELAGER 6014-RS	BALL BEARING 6014-RS	
37	305646	2	EKSENTER SV.	ECCENTRIC DISC	
38	813445	2	SEKSKANTSKRUE M8X45-8.8 ELZN	HEX. BOLT M8X45-8.8 GALV.	
38	852158	2	NYLOCKMUTTER M8 ELZN.	NYLOCK NUT M8 GALV.	
39	813520	2	SEKSKANTSKRUE M10X20-8.8 ELZN	HEX. BOLT M10X20-8.8 GALV.	
40	868598	2	LÅSERING INNV. I 110X4	CIRCLIP I110X4	
41	813635	4	SEKSKANTSKRUE M12X35-8.8 ELZN	HEX. BOLT M12X35-8.8 GALV	
41	860163	4	BRIKKE Ø13-Ø24X2.5 ELZN	WASHER Ø13-Ø24X2.5	

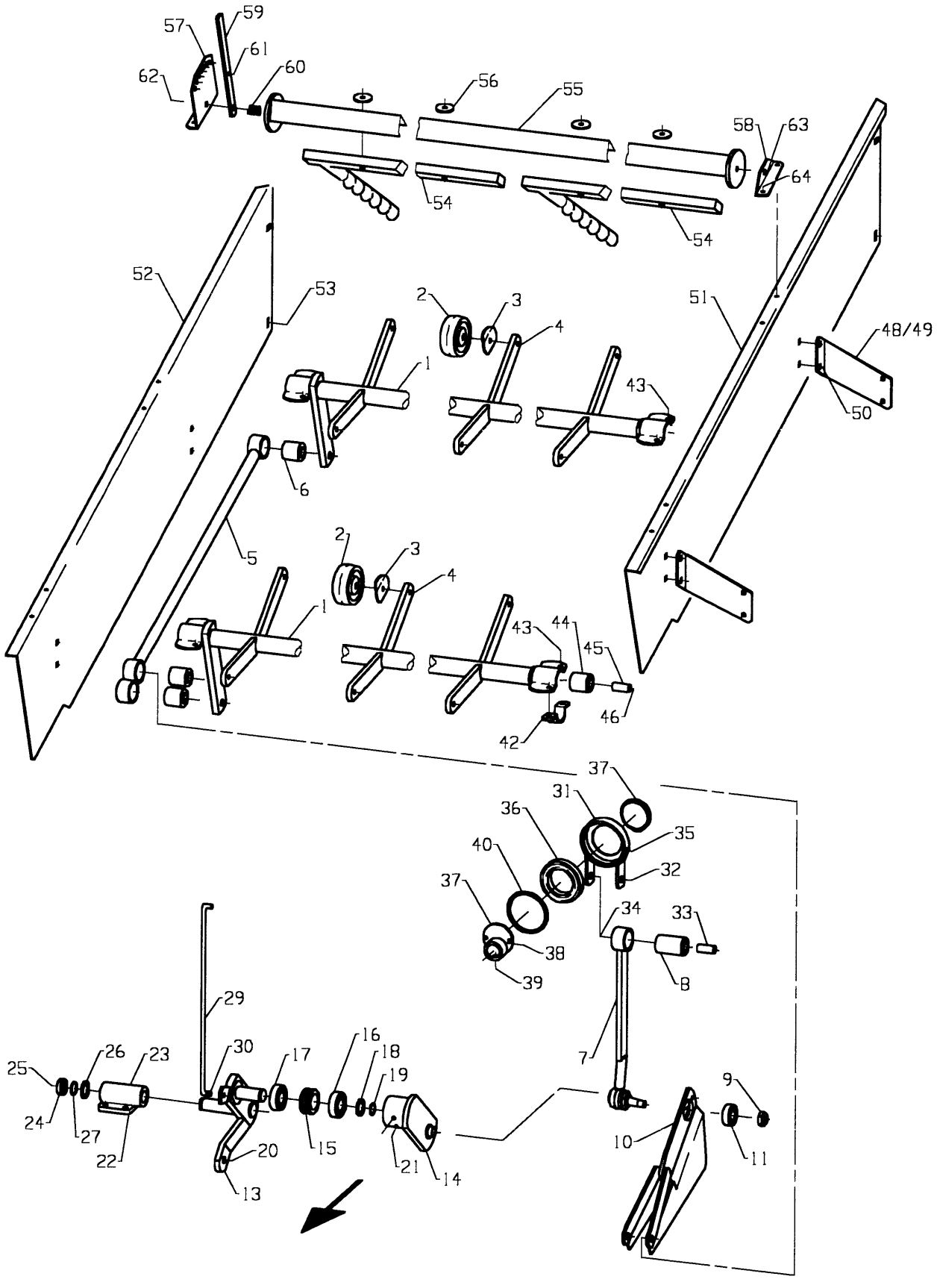
57
59
61
62
60
56
55
58
63
64
54
54
52
53
2
3
4
51
48/49
1
43
50
6
5
2
3
4
1
43
44
45
46
42
37
31
36
35
40
32
37
34
33
38
8
39
29
7
25
26
23
30
17
16
18
19
9
24
27
22
20
15
21
14
10
11
13

Fig. 12

Utgave: / Issue: 5	Redskap: / Implement: POTETHØSTER 2600 / POTATO HARVESTER 2600	Kverneland
Dato: / Date: 02-06	Enhet / Unit SÅLDERENNE M/MEK.SKAKING / LIFTING ELEVATOR W/BELT AGITATOR	Fig nr.: 12

Ref. No.	Delenr. Part no.	Ant. Qty.	Gjenstand	Description	Anmerkning Note
41	852162	4	NYLOCKMUTTER M12 ELZN.	NYLOCK NUT M12 GALV	
42	300641	4	KLAMMER	CLAMP	
43	813530	8	SEKSKANTSKRUE M10X30-8.8 ELZN	HEX. BOLT M10X30-8.8 GALV.	
43	852160	8	NYLOCKMUTTER M10 ELZN.	NYLOCK NUT M10 GALV.	
44	300644	4	GUMMIOPPHENG Ø45-20X46	ELASTIC BUSHING Ø45-20X46	
45	300645	4	HYLSE Ø16.1-Ø19X40	SPACER Ø16.1-Ø19X40	
46	813870	4	SEKSKANTSKRUE M16X70-8.8 ELZN	HEX. BOLT M16X70-8.8 GALV	
46	852166	4	NYLOCKMUTTER M16 ELZN.	NYLOCK NUT M16 GALV	
47	813901	1	SEKSKANTSKRUE M16X110-8.8 ELZN	HEX. BOLT M16X110-8.8 GALV	
47	852166	1	NYLOCKMUTTER M16 ELZN.	NYLOCK NUT M16 GALV	
48	301711	2	SKJERMFESTE V.	GUARD BRACKET LEFT	
49	301712	2	SKJERMFESTE H.	GUARD BRACKET RIGHT	
50	813525	8	SEKSKANTSKRUE M10X25-8.8 ELZN	HEX. BOLT M10X25-8.8 GALV.	
50	852160	8	NYLOCKMUTTER M10 ELZN.	NYLOCK NUT M10 GALV.	
51	321876	1	RENNESKJERM V.	GUARD LH	
52	321877	1	RENNESKJERM H.	GUARD RH	
53	821520	8	LÅSESKRUE M10X20-4.6 ELZN.	CARRIAGE BOLT M10X20-4.6 GALV	
53	852160	8	NYLOCKMUTTER M10 ELZN.	NYLOCK NUT M10 GALV.	
54-63	**322050**	**2**	**KLUMPKNUSER KPL.**	**CLOD CRUSHER ASSY**	
54	301502	2	KLUMPKNUSEMATTE	CLOD CRUSHER SECTION	
55	322052	1	BÆRERAMME SV.	FRAME	
56	219179	4	BRIKKE Ø11-Ø45X3	WASHER Ø11-Ø45X3	
56	813545	4	SEKSKANTSKRUE M10X45-8.8 ELZN	HEX. BOLT M10X45 8.8	
56	852160	4	NYLOCKMUTTER M10 ELZN.	NYLOCK NUT M10 GALV.	
57	301509	1	HOLVINKEL	RATCHET PLATE	
58	301510	1	VINKEL	BRACKET	
59	301511	1	SPAK	LEVER	
60	400241	1	TRYKKFJØR Ø4-Ø18X30	TENSION SPRING	
61	813425	1	SEKSKANTSKRUE M8X25-8.8 ELZN	HEX. BOLT M8X25-8.8 GALV.	
61	850158	1	SEKSKANTMUTTER M8-8 ELZN.	HEX. NUT M8-8 GALV.	
62	813660	1	SEKSKANTSKRUE M12X60-8.8 ELZN	HEX. BOLT M12X60-8.8 GALV.	
62	852162	1	NYLOCKMUTTER M12 ELZN.	NYLOCK NUT M12 GALV	
62	860163	1	BRIKKE Ø13-Ø24X2.5 ELZN	WASHER Ø13-Ø24X2.5	
63	813630	1	SEKSKANTSKRUE M12X30-8.8 ELZN	HEX. BOLT M12X30-8.8 GALV.	
63	852162	1	NYLOCKMUTTER M12 ELZN.	NYLOCK NUT M12 GALV	
64	813416	8	SEKSKANTSKRUE M8X16-8.8 ELZN	HEX. BOLT M8X16-8.8 GALV.	
64	852158	8	NYLOCKMUTTER M8 ELZN.	NYLOCK NUT M8 GALV.	

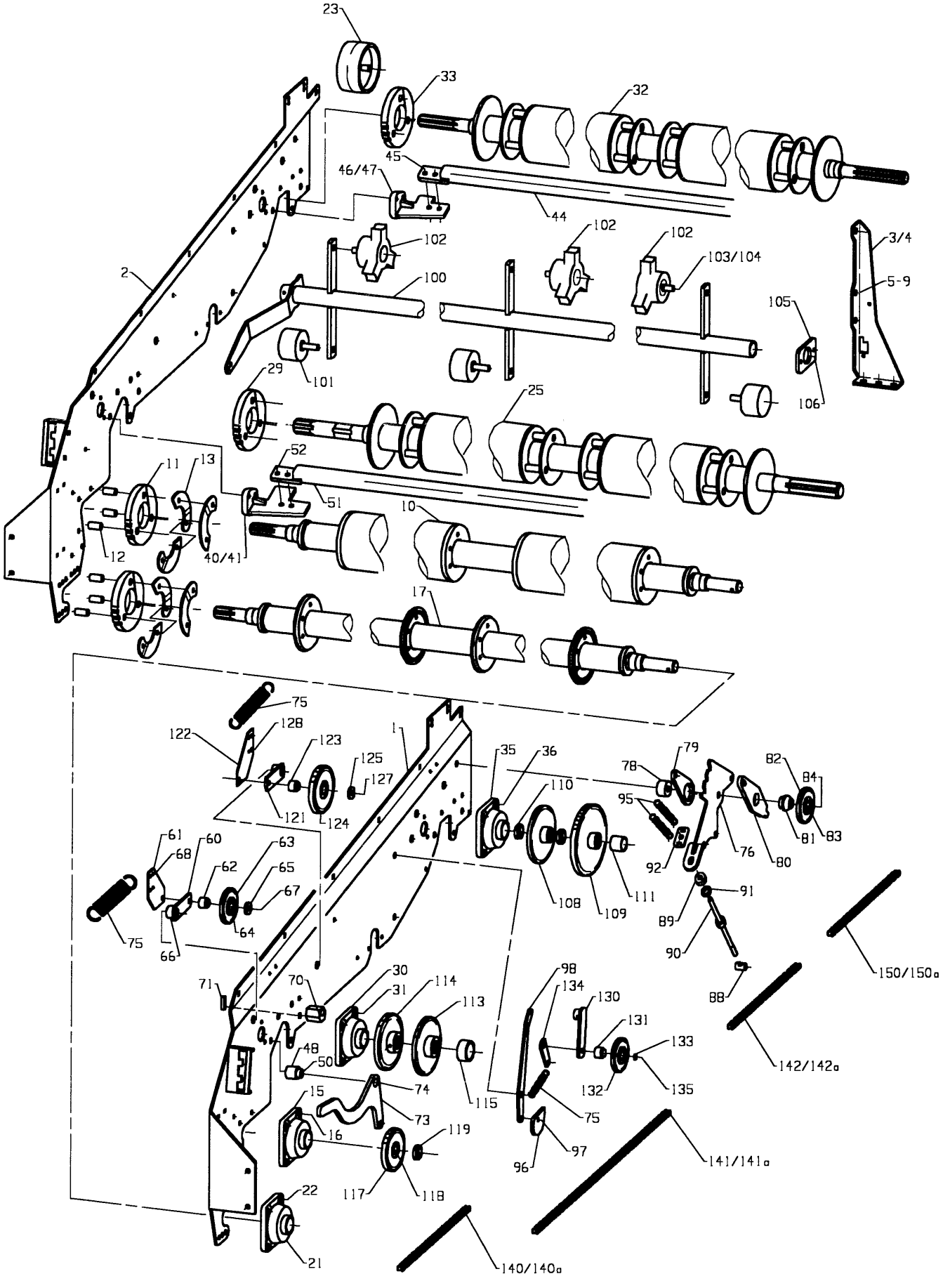
23
33
32
45
46/47
44
102
102
102
103/104
3/4
5-9
2
100
105
101
29
25
106
52
11
13
51
10
12
40/41
17
75
122
128
123
125
127
1
35
36
79
78
82
84
110
95
121
124
61
60
63
68
62
65
67
92
76
80
81
83
108
109
111
91
89
75
64
66
90
150/150a
71
70
30
31
114
113
98
134
130
131
88
48
50
133
142/142a
74
115
132
135
15
73
75
16
119
97
96
141/141a
117
118
22
21
140/140a

Fig. 13

Utgave: / Issue: 5	Redskap: / Implement: POTETHØSTER 2600 / POTATO HARVESTER 2600	Kverneland
Dato: / Date: 02-06	Enhet / Unit: BELTEDRIFT V / WEB DRIVE RH	Fig nr.: 13

Ref. No.	Delenr. Part no.	Ant. Qty.	Gjenstand	Description	Anmerkning Note
1	321755	1	RAMMEPLATE V.SV.	FRAME PLATE LH	
2	321756	1	RAMMEPLATE H.SV.	FRAME PLATE RH	
3	321759	1	FESTEVINKEL V.	BRACKET LH	
4	321760	1	FESTEVINKEL H.	BRACKET RH	
5	813840	2	SEKSKANTSKRUE M16X40-8.8 ELZN	HEX. BOLT M16X40-8.8 GALV.	
6	813870	2	SEKSKANTSKRUE M16X70-8.8 ELZN	HEX. BOLT M16X70-8.8 GALV	
7	860166	8	BRIKKE Ø17-Ø30X3 ELZN	WASHER Ø17-Ø30X3	
8	850166	2	SEKSKANTMUTTER M16-8 ELZN.	HEX. NUT M16 GALV	
9	852166	4	NYLOCKMUTTER M16 ELZN.	NYLOCK NUT M16 GALV	
10-13	**321770**	**1**	**DRIVAKSEL 1.BELTE MIDTRE KPL.**	**CENTRE DRIVE ROLLER, 1.WEB Y**	
10	321771	1	DRIVAKSEL 1.BELTE MIDTRE SV.	CENTRE DRIVE ROLLER 1.WEB	
11	303503	8	BELTEDREV GUMMI UNIVERSAL 27T	RUBBER DRIVE DISC ALL ROUND	
12	303186	12	HYLSE Ø12.4-Ø19X34	COLLAR	
13	303185	4	KLEMPLATE	PLATE	
15	870145	2	KULELAGER SKF-FY35TF	BALL BEARING SKF-FY35TF	
16	813640	6	SEKSKANTSKRUE M12X40-8.8 ELZN	HEX. BOLT M12X40-8.8 GALV	
16	860163	6	BRIKKE Ø13-Ø24X2.5 ELZN	WASHER Ø13-Ø24X2.5	
16	852162	6	NYLOCKMUTTER M12 ELZN.	NYLOCK NUT M12 GALV	
17-20	**321780**	**1**	**DRIVAKSEL 1.BELTE NEDRE KPL.**	**LOWER DRIVE ROLLER 1.WEB**	
17	321781	1	DRIVAKSEL 1.BELTE NEDRE SV.	LOWER DRIVE ROLLER 1.WEB	
18	303503	8	BELTEDREV GUMMI UNIVERSAL 27T	RUBBER DRIVE DISC ALL ROUND	
19	303186	12	HYLSE Ø12.4-Ø19X34	COLLAR	
20	303185	4	KLEMPLATE	PLATE	
21	870145	2	KULELAGER SKF-FY35TF	BALL BEARING SKF-FY35TF	
22	813640	6	SEKSKANTSKRUE M12X40-8.8 ELZN	HEX. BOLT M12X40-8.8 GALV	
22	860163	6	BRIKKE Ø13-Ø24X2.5 ELZN	WASHER Ø13-Ø24X2.5	
22	852162	6	NYLOCKMUTTER M12 ELZN.	NYLOCK NUT M12 GALV	
23	303562	1	STØTTERING BRED	SUPPORT RING, BROAD	
24	825455	2	SYLINDER SKRUE M10X55-12.9	CYLINDER SCREW M10X55-12.9	
24	860860	2	FJØRSKIVE 10 ELZN	SPRING WASHER 3/8"	
25-29	**321710**	**1**	**DRIVAKSEL 1.BELTE ØVRE KOMPL.**	**AXEL 1.BELT UPPER ASSY**	
25	321711	1	DRIVAKSEL 1.BELTE ØVRE SV.	UPPER DRIVE ROLLER 1.WEB	
29	303503	4	BELTEDREV GUMMI UNIVERSAL 27T	RUBBER DRIVE DISC ALL ROUND	
30	870148	2	KULELAGER SKF-FY45TF	BALL BEARING SKF-FY45TF	
31	813845	6	SEKSKANTSKRUE M16X45-8.8 ELZN	HEX. BOLT M16x45-8.8 GALV.	
31	860166	6	BRIKKE Ø17-Ø30X3 ELZN	WASHER Ø17-Ø30X3	
31	852166	6	NYLOCKMUTTER M16 ELZN.	NYLOCK NUT M16 GALV	
32-33	**305858**	**1**	**DRIVAKSEL 2.BELTE KOMPL.**	**DRIVE ROLLER 2.WEB ASSY**	
32	305860	1	DRIVAKSEL 2.BELTE SV.	DRIVEROLLER 2.BELT	
33	303503	12	BELTEDREV GUMMI UNIVERSAL 27T	RUBBER DRIVE DISC ALL ROUND	
35	870145	2	KULELAGER SKF-FY35TF	BALL BEARING SKF-FY35TF	
36	813640	2	SEKSKANTSKRUE M12X40-8.8 ELZN	HEX. BOLT M12X40-8.8 GALV	
36	813650	4	SEKSKANTSKRUE M12X50-8.8 ELZN	HEX. BOLT M12X50-8.8 GALV.	
36	860163	6	BRIKKE Ø13-Ø24X2.5 ELZN	WASHER Ø13-Ø24X2.5	
36	852162	6	NYLOCKMUTTER M12 ELZN.	NYLOCK NUT M12 GALV	
40	303156	1	AVSKRAPER V. SV.	SCRAPER LH	
41	303157	1	AVSKRAPER H. SV.	SCRAPER RH	
42	813840	2	SEKSKANTSKRUE M16X40-8.8 ELZN	HEX. BOLT M16X40-8.8 GALV.	
43	866520	2	SPENNHYLSE 10X20	TENSION PIN 10X20X2.0	
44	305731	1	AVSKRAPERSTANG SV.	DRIVE ROLLER SCRAPER	
45	813540	4	SEKSKANTSKRUE M10X40-8.8 ELZN	HEX. BOLT M10X40-8.8 GALV.	
45	860160	8	BRIKKE Ø10.5-Ø21X2 ELZN	WASHER Ø10.5-Ø21X2	

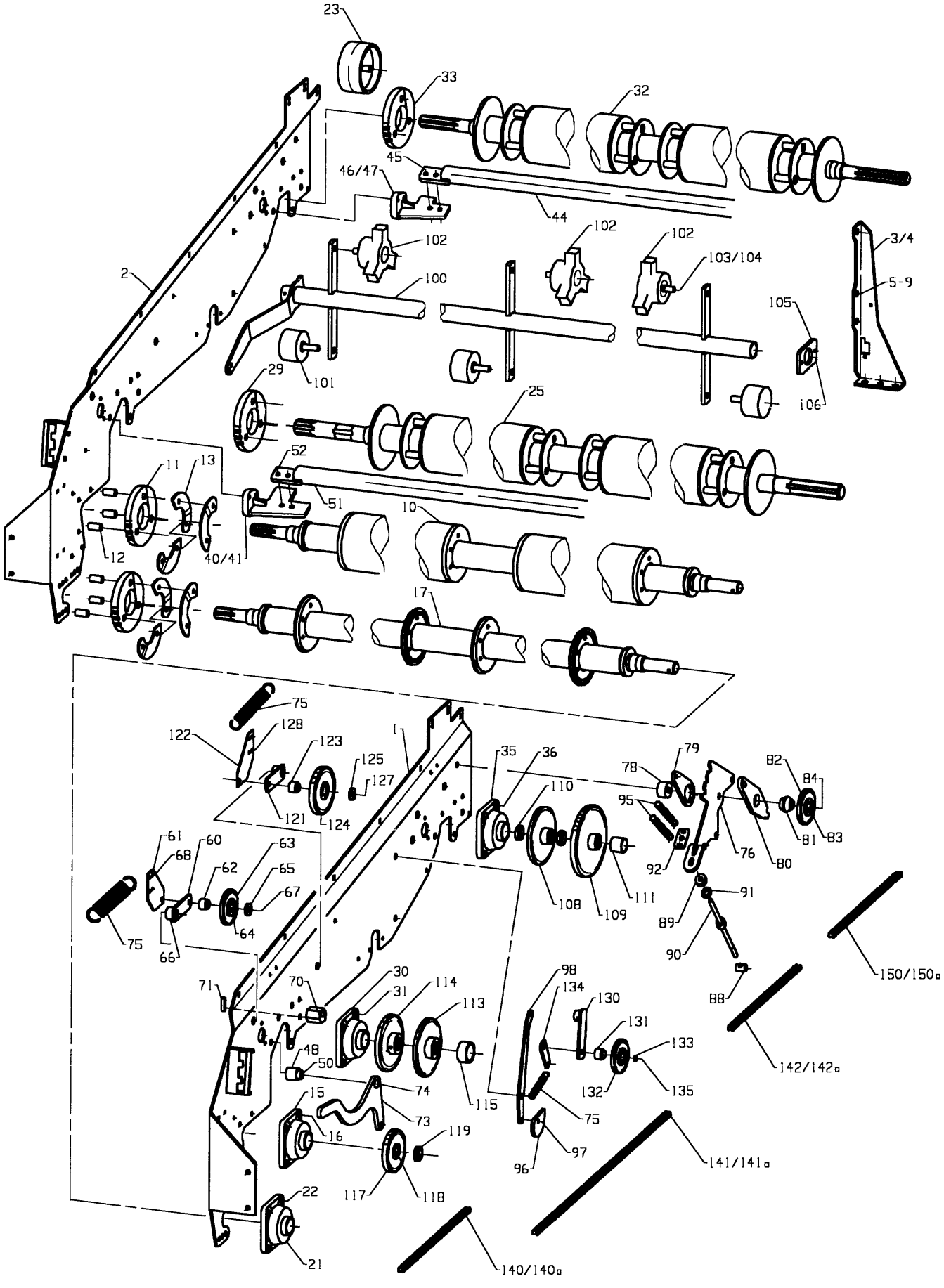
23
33
32
45
46/47
44
102
102
102
103/104
3/4
5-9
2
100
105
29
101
106
25
52
51
10
11
13
12
40/41
17
75
128
122
123
125
127
121
124
1
35
36
110
78
79
82
84
95
81
83
92
76
80
61
60
63
68
62
65
67
64
66
75
108
109
111
91
89
90
88
150/150a
71
70
30
31
114
113
98
134
130
131
133
48
50
74
115
132
135
142/142a
15
73
16
119
75
97
96
141/141a
22
117
118
21
140/140a

Fig. 13

Utgave: / Issue: 5	Redskap: / Implement: POTETHØSTER 2600 / POTATO HARVESTER 2600	Kverneland
Dato: / Date: 02-06	Enhet / Unit: BELTEDRIFT V / WEB DRIVE RH	Fig nr.: 13

Ref. No.	Delenr. Part no.	Ant. Qty.	Gjenstand	Description	Anmerkning Note
45	852160	4	NYLOCKMUTTER M10 ELZN.	NYLOCK NUT M10 GALV.	
46	303146	1	AVSKRAPER V. SV.	SCRAPER LH	
47	303147	1	AVSKRAPER H. SV.	SCRAPER RH	
48	300345	2	BØSSING Ø16.5X40-Ø25/11	SLIDE BEARING Ø16.5X40-Ø25/11	
49	866520	2	SPENNHYLSE 10X20	TENSION PIN 10X20X2.0	
50	860166	2	BRIKKE Ø17-Ø30X3 ELZN	WASHER Ø17-Ø30X3	
50	813870	2	SEKSKANTSKRUE M16X70-8.8 ELZN	HEX. BOLT M16X70-8.8 GALV	
51	305731	1	AVSKRAPERSTANG SV.	DRIVE ROLLER SCRAPER	
52	813540	4	SEKSKANTSKRUE M10X40-8.8 ELZN	HEX. BOLT M10X40-8.8 GALV.	
52	860160	8	BRIKKE Ø10.5-Ø21X2 ELZN	WASHER Ø10.5-Ø21X2	
52	852160	4	NYLOCKMUTTER M10 ELZN.	NYLOCK NUT M10 GALV.	
60-68	**300320**	**1**	**STRAMMERULL KOMPL.**	**TENSION ROLLER ASSY.**	
60	300322	1	ARM SV.	ARM	
61	300325	1	PLATE	PLATE	
62	402570	1	BØSSING Ø13X22-Ø24.8/4.5	BUSHING Ø13X22-Ø24.8/4.5	
63	402561	1	KJEDEHJUL 3/4" 16T M/LAGER	SPROCKET 3/4" 16T ASSY	
64	870728	1	KULELAGER 6205-2RS-C3 SPESIAL	BEARING 6205-2RS-CR	
65	228577	1	BRIKKE Ø13.5-Ø35X5	WASHER Ø13.5-Ø35X5	
66	873540	1	SMØRENIPPEL M6 RETT	GREASE NIPPLE M6 STRAIGHT	
67	813660	1	SEKSKANTSKRUE M12X60-8.8 ELZN	HEX. BOLT M12X60-8.8 GALV.	
67	852162	1	NYLOCKMUTTER M12 ELZN.	NYLOCK NUT M12 GALV	
68	813430	1	SEKSKANTSKRUE M8X30-8.8 ELZN	HEX. BOLT M8X30-8.8 GALV.	
68	850158	2	SEKSKANTMUTTER M8-8 ELZN.	HEX. NUT M8-8 GALV.	
70	300342	2	RISRULLANSLAG	HAULM ROLLER STOP KNOB	
71	300318	2	MUTTERPLATE	NUT PLATE	
72	866520	2	SPENNHYLSE 10X20	TENSION PIN 10X20X2.0	
73	321805	2	ARM	ARM	
74	813840	2	SEKSKANTSKRUE M16X40-8.8 ELZN	HEX. BOLT M16X40-8.8 GALV.	
74	860166	2	BRIKKE Ø17-Ø30X3 ELZN	WASHER Ø17-Ø30X3	
74	852166	2	NYLOCKMUTTER M16 ELZN.	NYLOCK NUT M16 GALV	
75	300336	1	STREKKFJØR Ø4-Ø31X165	TENSION SPRING Ø4-Ø31X165	
76	321811	2	LÅSEPLATE SV.	COVER PLATE	
77	860163	8	BRIKKE Ø13-Ø24X2.5 ELZN	WASHER Ø13-Ø24X2.5	
78	321812	2	HYLSE Ø17-Ø45X24	COLLAR	
79	321813	2	MUTTER LASK	PLATE	
80	321809	2	ARM SV.	ARM	
81	321808	2	BøSSING ø17X31-X25X4	BUSHING	
82	402561	1	KJEDEHJUL 3/4" 16T M/LAGER	SPROCKET 3/4" 16T ASSY	
83	870728	1	KULELAGER 6205-2RS-C3 SPESIAL	BEARING 6205-2RS-CR	
84	860166	2	BRIKKE Ø17-Ø30X3 ELZN	WASHER Ø17-Ø30X3	
84	852166	2	NYLOCKMUTTER M16 ELZN.	NYLOCK NUT M16 GALV	
84	813900	1	SEKSKANTSKRUE M16X100-8.8 ELZN	HEX. BOLT M16X100-8.8 GALV.	
85	813890	1	SEKSKANTSKRUE M16X90-8.8 ELZN	HEX. BOLT M16X90-8.8 GALV	
86	813635	2	SEKSKANTSKRUE M12X35-8.8 ELZN	HEX. BOLT M12X35-8.8 GALV	
87	860163	2	BRIKKE Ø13-Ø24X2.5 ELZN	WASHER Ø13-Ø24X2.5	
88	321815	2	AKSEL Ø20X30-M12/13	AXLE	
89	321845	2	DEMPER Ø32-ø13X15	DAMPER	
90	321824	1	REGULERINGSSTAG SV.	ADJUSTING STAY	
91	860166	1	BRIKKE Ø17-Ø30X3 ELZN	WASHER Ø17-Ø30X3	
92	321823	1	BRIKKE Ø13-60X30X4	WASHER	
93	866270	1	SPENNHYLSE 5X20	TENSION PIN 5X20	
95	300336	4	STREKKFJØR Ø4-Ø31X165	TENSION SPRING Ø4-Ø31X165	
96	321844	2	EKSENTERPLATE.	ECCENTRIC PLATE	
97	813660	2	SEKSKANTSKRUE M12X60-8.8 ELZN	HEX. BOLT M12X60-8.8 GALV.	
98	321846	2	STRAMMEARM	TENSION ARM	
99	813630	2	SEKSKANTSKRUE M12X30-8.8 ELZN	HEX. BOLT M12X30-8.8 GALV.	
99	860163	2	BRIKKE Ø13-Ø24X2.5 ELZN	WASHER Ø13-Ø24X2.5	

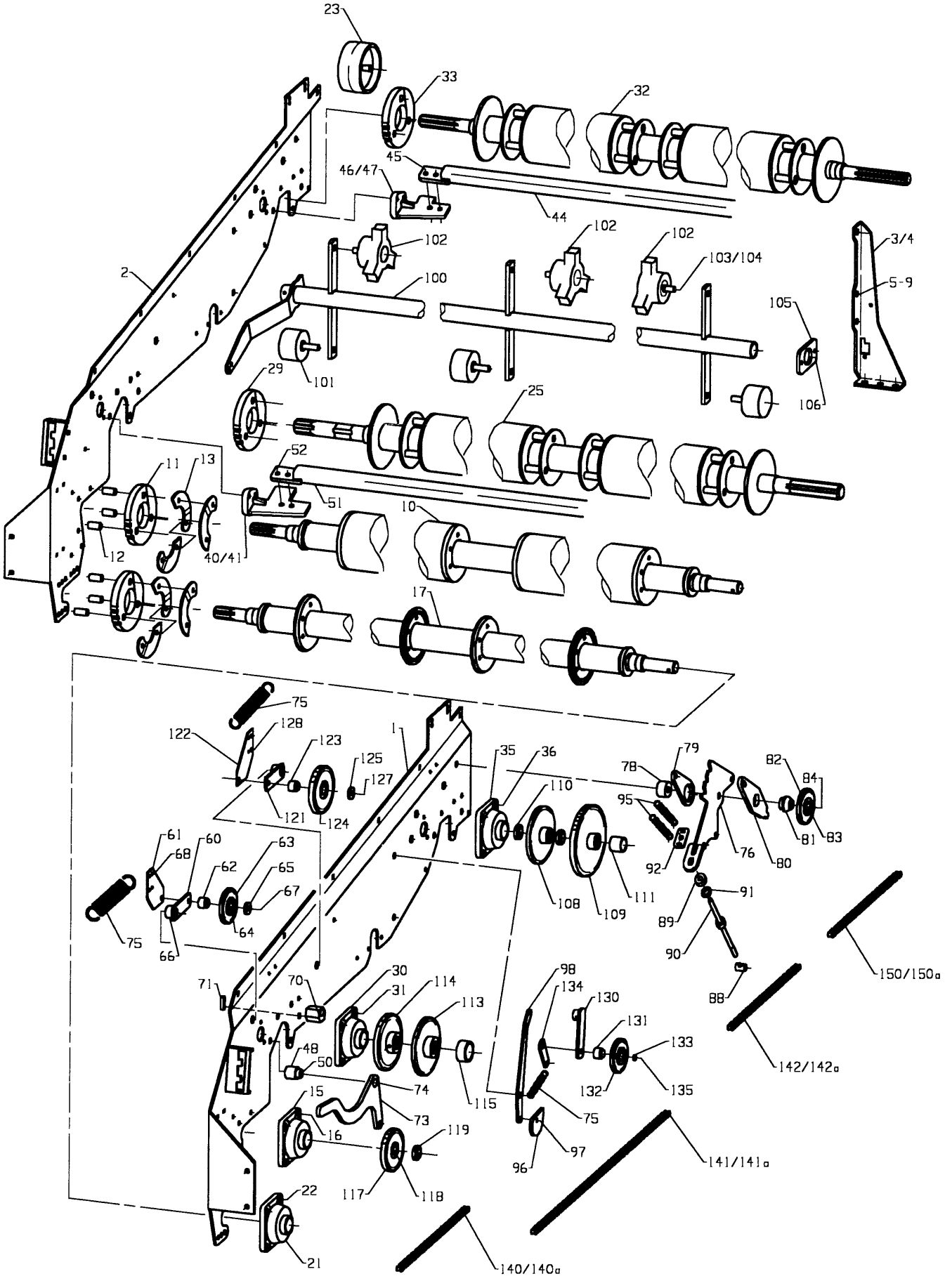
23
33
32
45
46/47
44
102
102
102
103/104
3/4
5-9
2
100
105
101
29
25
106
52
11
13
51
10
12
40/41
17
75
122
128
123
125
127
1
35
36
79
78
82
84
110
95
121
124
61
60
63
68
62
65
67
76
80
81
83
92
108
109
111
91
89
75
64
66
90
150/150a
71
70
30
31
114
113
98
134
130
131
88
48
50
133
142/142a
74
132
135
15
115
73
75
16
119
97
96
141/141a
117
118
22
21
140/140a

Fig. 13

Utgave: / Issue: 5	Redskap: / Implement: POTETHØSTER 2600 / POTATO HARVESTER 2600	Kverneland
Dato: / Date: 02-06	Enhet / Unit: BELTEDRIFT V / WEB DRIVE RH	Fig nr.: 13

Ref. No.	Delenr. Part no.	Ant. Qty.	Gjenstand	Description	Anmerkning Note
99	852162	2	NYLOCKMUTTER M12 ELZN.	NYLOCK NUT M12 GALV	
100-104	**321655**	**1**	**AKSLING MONTERT**	**AXLE ASSY**	
100	321657	1	AKSLING SV.	AXLE	
101	301144	3	STØTTERULL Ø90 M/GUMMI KOMPL.	RUBBERCOATED SUPPORT ROLLER 90	
102	307200	3	SKAKERULL BELTEDREVET	RUBBER SHAKER	
103	860166	6	BRIKKE Ø17-Ø30X3 ELZN	WASHER Ø17-Ø30X3	
104	850166	6	SEKSKANTMUTTER M16-8 ELZN.	HEX. NUT M16 GALV	
105	321664	2	LAGERPLATE	BEARING PLATE	
106	813530	4	SEKSKANTSKRUE M10X30-8.8 ELZN	HEX. BOLT M10X30-8.8 GALV.	
106	860160	4	BRIKKE Ø10.5-Ø21X2 ELZN	WASHER Ø10.5-Ø21X2	
106	852160	4	NYLOCKMUTTER M10 ELZN.	NYLOCK NUT M10 GALV.	
107	866460	1	SPENNHYLSE 8X60	TENSION PIN 8X60X1.6	
108	300191	1	KJEDEHJUL 3/4" 27T SV.	SPROCKET 3/4" 27T	
109	300390	1	KJEDEHJUL 1" 25T SV.	SPROCKET 1" 25T	
110	228356	2	AVSTANDSRING FOR DRIVAKSEL	SPACER	
111	321849	1	HYLSE Ø36-Ø42.4X32	COLLAR	
112	866455	1	SPENNHYLSE 8X55	LOCK PIN 8X55	
113	305827	1	KJEDEHJUL 1" 19T SV.	SPROCKET 1" 19 T	
114	305829	1	KJEDEHJUL 3/4" 27T SV.	SPROCKET 3/4" 27 T	
115	305833	1	HYLSE Ø47.7-Ø60.3X26	COLLAR	
116	866460	1	SPENNHYLSE 8X60	TENSION PIN 8X60X1.6	
117	305850	1	KJEDEHJUL 3/4" 19T M/LAGER	SPROCKET 3/4" 19T W/BEARING	
118	870738	1	KULELAGER 6207-2RS-C3 SPESIAL	BALL BEARING 6207-2RS-C3 SPES	
119	228356	2	AVSTANDSRING FOR DRIVAKSEL	SPACER	
120	866445	1	SPENNHYLSE 8X45	TENSION PIN	
121-128	**305947**	**1**	**STRAMMERULL KOMPL.**	**TENSION ROLLER COMPL.**	
121	300322	1	ARM SV.	ARM	
122	300325	1	PLATE	PLATE	
123	402570	1	BØSSING Ø13X22-Ø24.8/4.5	BUSHING Ø13X22-Ø24.8/4.5	
124	305851	1	KJEDEHJUL 1" 16T M/LAGER	SPROCKET 16T W/BEARING	
125	228577	1	BRIKKE Ø13.5-Ø35X5	WASHER Ø13.5-Ø35X5	
126	873540	1	SMØRENIPPEL M6 RETT	GREASE NIPPLE M6 STRAIGHT	
127	813660	1	SEKSKANTSKRUE M12X60-8.8 ELZN	HEX. BOLT M12X60-8.8 GALV.	
127	852162	1	NYLOCKMUTTER M12 ELZN.	NYLOCK NUT M12 GALV	
128	813430	1	SEKSKANTSKRUE M8X30-8.8 ELZN	HEX. BOLT M8X30-8.8 GALV.	
128	850158	2	SEKSKANTMUTTER M8-8 ELZN.	HEX. NUT M8-8 GALV.	
130-135	**321890**	**1**	**STRAMMEARM KPL.**	**TENSION ARM ASSY**	
130	300322	1	ARM SV.	ARM	
131	402570	1	BØSSING Ø13X22-Ø24.8/4.5	BUSHING Ø13X22-Ø24.8/4.5	
132	402561	1	KJEDEHJUL 3/4" 16T M/LAGER	SPROCKET 3/4" 16T ASSY	
133	228577	1	BRIKKE Ø13.5-Ø35X5	WASHER Ø13.5-Ø35X5	
124	321848	1	LASK 32X5-X13/70/8X15	PLATE	
135	813665	1	SEKSKANTSKRUE M12X65-8.8 ELZNR	HEX. BOLT M12x65-8.8 GALV.	
135	852162	1	NYLOCKMUTTER M12 ELZN.	NYLOCK NUT M12 GALV	
140	901844	1	RULLEKJEDE 3/4"X1391	CHAIN 3/4"X1391	
140a	901802	1	RULLEKJEDELÅS 3/4"	CHAIN CONNECTOR 3/4"	
141	902022	1	RULLEKJEDE 1"X3124	CHAIN 1"X3124	
141a	902002	1	RULLEKJEDELÅS 1"	CHAIN CONNECTOR 1"	
142	901846	1	RULLEKJEDE 3/4"X1582	CHAIN 3/4"X1582	
142a	901802	1	RULLEKJEDELÅS 3/4"	CHAIN CONNECTOR 3/4"	

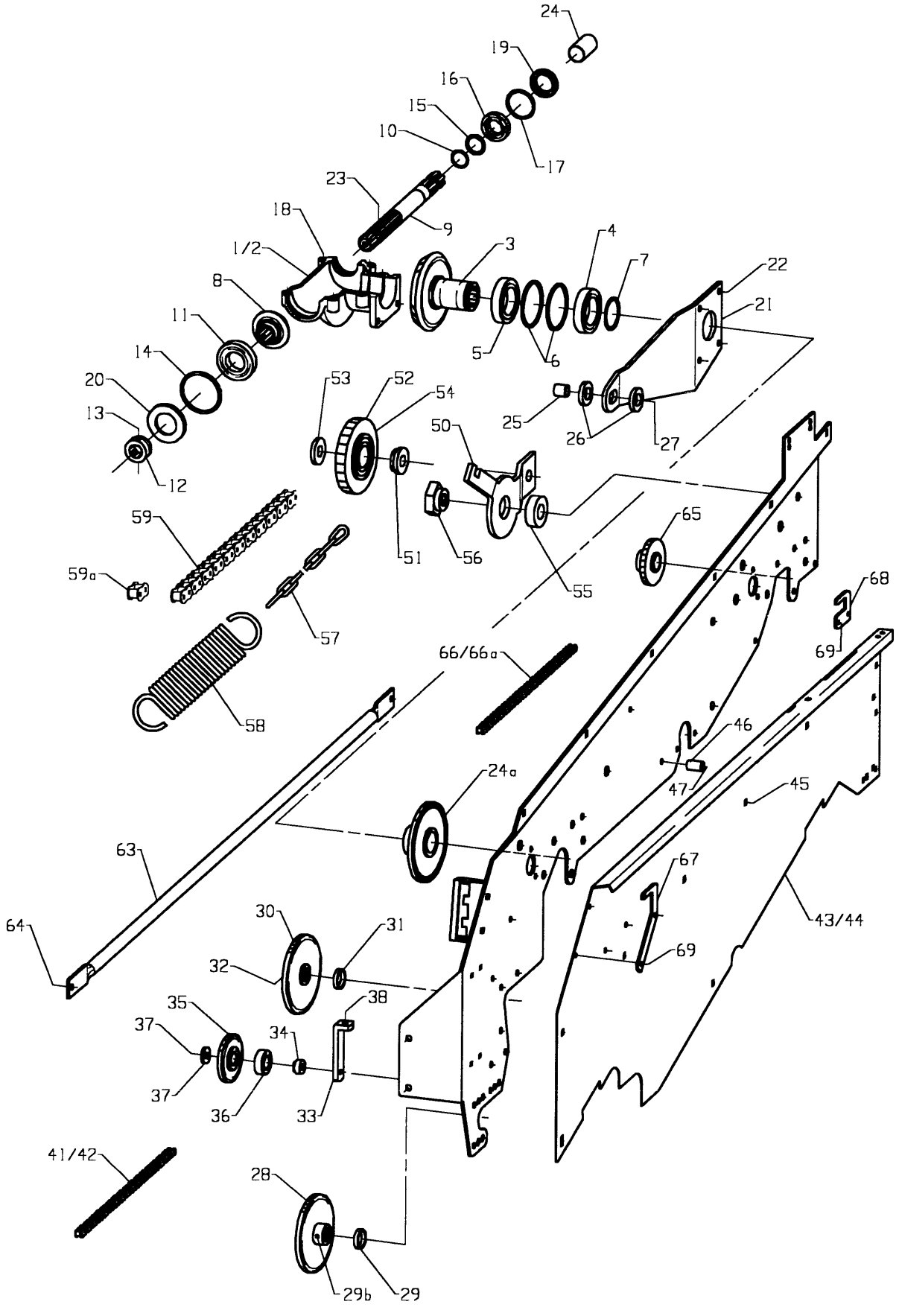
24
19
16
15
10
17
23
9
18
1/2
3
4
7
22
8
21
11
5
6
14
20
53
52
54
25
26
27
13
50
12
59
65
59a
51
56
55
68
57
66/66a
69
58
46
24a
47
45
63
67
64
30
31
43/44
32
69
35
38
37
34
37
36
33
41/42
28
29b
29

Fig. 14

Utgave: / Issue: 5	Redskap: / Implement: POTETHØSTER 2600 / POTATO HARVESTER 2600	Kverneland
Dato: / Date: 02-06	Enhet / Unit: BELTEDRIFT H / WEB DRIVE LH	Fig nr.: 14

Ref. No.	Delenr. Part no.	Ant. Qty.	Gjenstand	Description	Anmerkning Note
1-24	**306070**	**1**	**GIRHUS KOMPL.**	**GEAR UNIT**	
1	300409	1	NEDRE GIRHUSHALVDEL	LOWER GEAR BOX CASING SECTION	
2	300410	1	ØVRE GIRHUSHALVDEL	UPPER GEAR BOX CASING SECTION	
3	300375	1	KONISK TANNHJUL M6.25/27T	BEVEL GEAR	
4	870661	1	KULELAGER 6012-RS	BALL BEARING 6012-RS	
5	870660	1	KULELAGER 6012	BALL BEARING 6012	
6	868595	2	LÅSERING INNV. I 95X3	CIRCLIP I95X3.00	
7	868460	1	LÅSERING UTV. A60X2	CIRCLIP A60X2.00	
8	300376	1	KONISK TANNHJUL M6.25/12T	PINION	
9	306072	1	SPLINESAKSEL	SHAFT WITH SPLINES	
10	868435	2	LÅSERING UTV. A35X1.5	CIRCLIP A35X1.50	
11	870745	1	KULELAGER 6209	BALL BEARING 6209	
12	306073	1	SPLINESHYLSE	COLLAR WITH SPLINES	
13	866455	1	SPENNHYLSE 8X55	LOCK PIN 8X55	
14	868585	1	LÅSERING INNV. I 85X3.00	CIRCLIP I85X3.00	
15	868607	1	STØTTERING 35X45X2.5	SUPPORT RING 35X45X2.5	
16	870635	1	KULELAGER 6007	BALL BEARING 6007	
17	868562	1	LÅSERING INNV. I 62X2	CIRCLIP I62X2.00	
18	813570	6	SEKSKANTSKRUE M10X70-8.8 ELZN	HEX. BOLT M10X70-8.8 GALV.	
18	852160	6	NYLOCKMUTTER M10 ELZN.	NYLOCK NUT M10 GALV.	
19	871362	1	TETNINGSRING 3562/10BA	OIL SEAL 3562/10BA	
20	871510	1	TETNINGSRING 5085/10	OIL SEAL 5085/10	
21	305780	1	MOMENTARM	ARM	
22	813640	4	SEKSKANTSKRUE M12X40-8.8 ELZN	HEX. BOLT M12X40-8.8 GALV	
22	860163	4	BRIKKE Ø13-Ø24X2.5 ELZN	WASHER Ø13-Ø24X2.5	
22	852162	4	NYLOCKMUTTER M12 ELZN.	NYLOCK NUT M12 GALV	
23	873540	1	SMØRENIPPEL M6 RETT	GREASE NIPPLE M6 STRAIGHT	
24	255483	1	VERNEHYLSE FOR DRIVAKSEL	TUBE GUARD	
24a	305831	1	KJEDEHJUL 3/4" 27T. SV.	SPROCKET 3/4" 27T	
25	305782	1	HYLSE Ø17-Ø25X24	SOCKET Ø17-Ø25X24	
26	305783	2	GUMMIBRIKKE Ø26-Ø50X8	RUBBER RING Ø26-Ø50X8	
27	813860	1	SEKSKANTSKRUE M16X60-8.8 ELZN	HEX. BOLT M16X60-8.8 GALV.	
27	860166	2	BRIKKE Ø17-Ø30X3 ELZN	WASHER Ø17-Ø30X3	
27	852166	1	NYLOCKMUTTER M16 ELZN.	NYLOCK NUT M16 GALV	
28	300191	1	KJEDEHJUL 3/4" 27T SV.	SPROCKET 3/4" 37T	
29	228356	1	AVSTANDSRING	SPACER	
29a	306118	1	BRIKKE Ø35.2-Ø45X4	WASHER Ø35.2-Ø45X4	
29b	866455	1	SPENNHYLSE 8X55	LOCK PIN 8X55	
30	300448	1	KJEDEHJUL 3/4" 32T SV.	SPROCKET 3/4" 32T	
31	228356	1	AVSTANDSRING FOR DRIVAKSEL	SPACER	
32	866450	1	SPENNHYLSE 8X50	TENSION PIN 8X50X1.5	
32a	306118	1	BRIKKE Ø35.2-Ø45X4	WASHER Ø35.2-Ø45X4	
33	303313	1	MUTTERVINKEL	NUT PLATE	
34	303312	1	BØSSING Ø13X16-Ø24.8/4.5	BUSHING Ø13X16-Ø24.8/4.5	
35	402561	1	KJEDEHJUL 3/4" 16T M/LAGER	SPROCKET 3/4" 16T ASSY	
36	870728	1	KULELAGER 6205-2RS-C3 SPESIAL	BEARING 6205-2RS-CR	
37	228577	1	BRIKKE Ø13.5-Ø35X5	WASHER Ø13.5-Ø35X5	
37	813650	1	SEKSKANTSKRUE M12X50-8.8 ELZN	HEX. BOLT M12X50-8.8 GALV.	
38	860163	1	BRIKKE Ø13-Ø24X2.5 ELZN	WASHER Ø13-Ø24X2.5	
38	810690	1	6KT.SKR.HELGJ.M12X90-8.8 ELZN	HEX. BOLT M12X90-8.8 FULLY THR	
41	901857	1	RULLEKJEDE 3/4"X1962	CHAIN 3/4"X1962	
42	901802	1	RULLEKJEDELÅS 3/4"	CHAIN CONNECTOR 3/4"	
43	321872	1	SKJERM V.	GUARD LH	
44	321873	1	SKJERM H.	GUARD RH	
45	821520	12	LÅSESKRUE M10X20-4.6 ELZN.	CARRIAGE BOLT M10X20-4.6 GALV	
45	860160	12	BRIKKE Ø10.5-Ø21X2 ELZN	WASHER Ø10.5-Ø21X2	
45	852160	12	NYLOCKMUTTER M10 ELZN.	NYLOCK NUT M10 GALV.	
46	315508	6	HYLSE Ø11-Ø20X30	COLLAR	
47	821550	6	LÅSESKRUE M10X50-4.6 ELZN.	CARRIAGE BOLT M10X50-4.6 GALV	
47	860160	6	BRIKKE Ø10.5-Ø21X2 ELZN	WASHER Ø10.5-Ø21X2	
47	852160	6	NYLOCKMUTTER M10 ELZN.	NYLOCK NUT M10 GALV.	

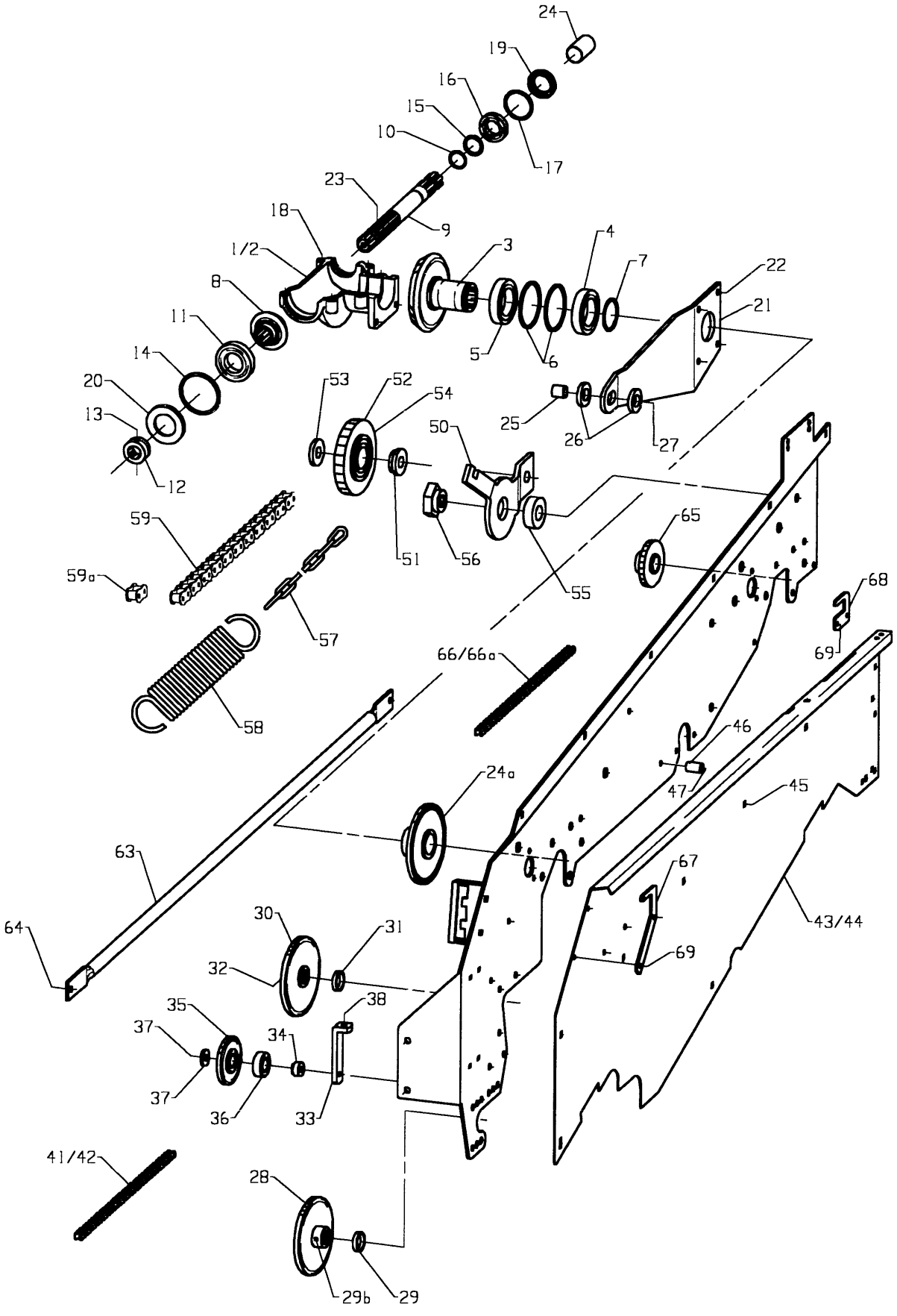
24
19
16
15
10
17
23
18
9
1/2
3
4
7
22
8
21
11
5
6
14
20
53
52
54
25
26
27
13
50
12
59
65
59a
51
56
55
68
57
66/66a
69
58
46
24a
47
45
63
67
64
30
31
43/44
32
69
38
35
37
34
37
36
33
41/42
28
29b
29

Fig. 14

Utgave: / Issue:	5	Redskap: / Implement:	POTETHØSTER 2600 / POTATO HARVESTER 2600	Kverneland
Dato: / Date:	02-06	Enhet / Unit	BELTEDRIFT H / WEB DRIVE LH	Fig nr.: 14

Ref. No.	Delenr. Part no.	Ant. Qty.	Gjenstand	Description	Anmerkning Note
50-56	**321884**	**1**	**KJEDESTRAMMER KOMPL.**	**TIGHTENER ASSY**	
50	321885	1	KJEDESTRAMMERARN	TIGHTENER ARM	
52	303728	1	KJEDEHJUL 3/4" 13T M/LAGER	SPROCKET 3/4" 13T W/BEARING	
53	214263	1	BRIKKE Ø12.5-Ø30X4	WASHER	
54	813645	1	SEKSKANTSKRUE M12X45-8.8 ELZN	HEX. BOLT M12X45-8.8 GALV	
54	852162	1	NYLOCKMUTTER M12 ELZN.	NYLOCK NUT M12 GALV.	
55	321886	1	BRIKKE Ø16.5-Ø35X10	WASHER Ø16.5-Ø35X10	
56	321887	1	6-KT.MUTTER M16 SPESIAL	HEX. NUT M16 SPECIAL	
57	215181	1	KJETTING Ø5-22X528	CHAIN Ø5-22X528	
58	300336	1	STREKKFJØR Ø4-Ø31X165	TENSION SPRING Ø4-Ø31X165	
59	901830	1	RULLEKJEDE 3/4"X934	CHAIN 3/4"X934	
59a	901802	1	RULLEKJEDEHALVLEDD 3/4"	HALF LINK 3/4"	
61	303728	1	KJEDEHJUL 3/4" 13T. M/LAGER	SPROCKET	
62	870728	1	KULELAGER 6205-2RS-C3 SPESIAL	BEARING 6205-2RS-CR	
63	321665	1	STAG	STAY	
64	813530	1	SEKSKANTSKRUE M10X30-8.8 ELZN	HEX. BOLT M10X30-8.8 GALV.	
64	860160	1	BRIKKE Ø10.5-Ø21X2 ELZN	WASHER Ø10.5-Ø21X2	
64	852160	1	NYLOCKMUTTER M10 ELZN.	NYLOCK NUT M10 GALV.	
65	303324	1	KJEDEHJUL 3/4" 16T SV.	SPROCKET 3/4" 16T SV.	
66	901854	1	RULLEKJEDE 3/4"X1505	ROLLER CHAIN 3/4"X1505	
66a	901802	1	RULLEKJEDELÅS 3/4"	CHAIN CONNECTOR 3/4"	
67	321802	2	SKJERMFESTE FORAN	BRACKET	
68	321803	2	SKJERMFESTE BAK	BRACKET	
69	813425	8	SEKSKANTSKRUE M8X25-8.8 ELZN	HEX. BOLT M8X25-8.8 GALV.	
69	860158	8	BRIKKE Ø8.4-17X1.6 ELZN	WASHER Ø8.4-Ø17X1.6	
69	852158	8	NYLOCKMUTTER M8 ELZN.	NYLOCK NUT M8 GALV.	

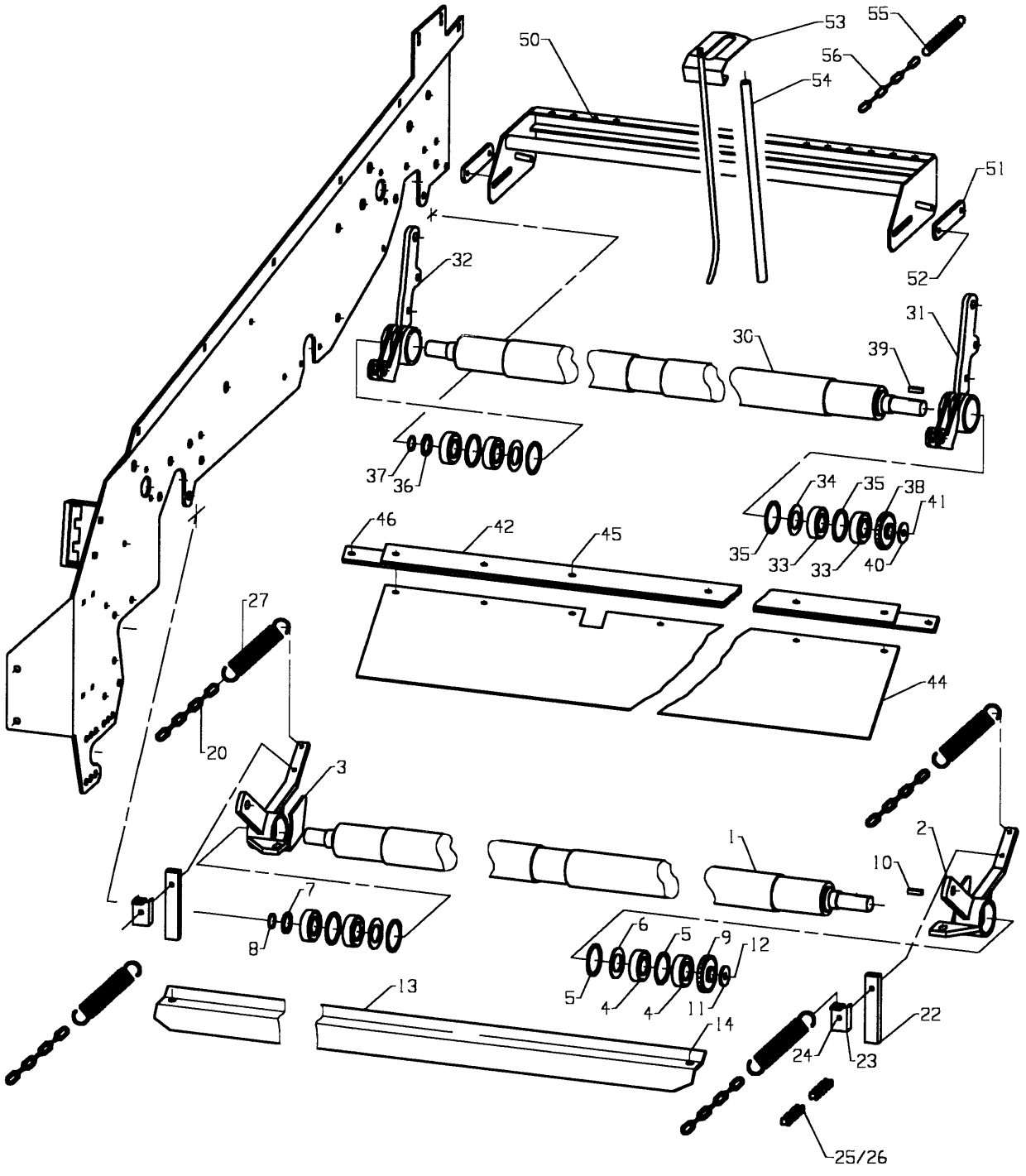
50
53
55
56
54
51
52
32
31
30
39
37
36
34
35
38
41
35
33
33
40
46
42
45
27
20
44
3
1
2
10
7
8
6
5
9
12
5
4
4
11
13
14
22
24
23
25/26

Fig. 15

Utgave: / Issue: 5	Redskap: / Implement: POTETHØSTER 2600 / POTATO HARVESTER 2600	Kverneland
Dato: / Date: 02-06	Enhet / Unit: RISRULLER / HAULM ROLLERS	Fig nr.: 15

Ref. No.	Delenr. Part no.	Ant. Qty.	Gjenstand	Description	Anmerkning Note
1-27	**321900**	**1**	**FREMRE RISRULL KPL.**	**HAULM ROLLER, FRONT**	
1-15	**305876**	**1**	**FRAMRE RISRULL M.LAGER**	**FORWARD HAULM ROLLER ASSY**	
1	305880	1	RISRULL M.GUMMI Ø74X1720	RUBBER COATED HAULM ROLLER	
2	305873	1	LAGERHUS V. SV.	BEARING BRACKET LH	
3	305874	1	LAGERHUS H. SV.	BEARING BRACKET RH	
4	870731	4	KULELAGER 6206-RS	BALL BEARING 6206-RS	
5	868562	4	LÅSERING INNV. I 62X2	CIRCLIP I62X2.00	
6	300189	2	BRIKKE Ø36-Ø61X2	WASHER Ø36-Ø61X2	
7	868606	1	STØTTERING 30X42X2.5	SUPPORT RING 30X42X2.5	
8	868430	1	LÅSERING UTV. A30X1.50	CIRCLIP A30X1.50	
9	300195	1	KJEDEHJUL 3/4" 11T-M/KON	SPROCKET 3/4" 11T	
10	300186	1	KILE 8X7X27.5	KEY	
11	300200	1	BRIKKE Ø13-Ø40X3 EL.GALV	WASHER Ø13-Ø40X2.5	
12	813620	1	SEKSKANTSKRUE M12X20-8.8 ELZN	HEX. BOLT M12X20-8.8 GALV.	
13	321903	1	AVSKRAPER	SCRAPER	
14	813630	2	SEKSKANTSKRUE M12X30-8.8 ELZN	HEX. BOLT M12X30-8.8 GALV.	
14	860163	2	BRIKKE Ø13-Ø24X2.5 ELZN	WASHER Ø13-Ø24X2.5	
14	852162	2	SEKSKANTMUTTER M12-8 ELZN.	HEX. NUT M12-8 GALV.	
15	873540	2	SMØRENIPPEL M6 RETT	GREASE NIPPLE M6 STRAIGHT	
20	300337	4	KJETTING Ø5-22X220	CHAIN Ø5-22X220	
21	867014	6	FJØRPINNE Ø4.0X75 ELZN	SPRING PIN Ø4.0X75 GALV	
22	303140	2	GUMMIDEMPER	303502	
23	303145	2	FJØRFESTE	SPRING ATTACHMENT	
24	813440	2	SEKSKANTSKRUE M8X40-8.8 ELZN	HEX. BOLT M8X40-8.8 GALV.	
24	852158	2	NYLOCKMUTTER M8 ELZN.	NYLOCK NUT M8 GALV.	
25	901844	1	RULLEKJEDE 3/4"X1391	CHAIN 3/4"X1391	
26	901802	1	RULLEKJEDELÅS 3/4"	902018TING LINK 3/4"	
27	300336	4	STREKKFJØR Ø4-Ø31X165	TENSION SPRING Ø4-Ø31X165	
30-47	**321830**	**1**	**RISRULL BAKRE KPL.**	**REAR HAULM ROLLER ASSY**	
30	305880	1	RISRULL M.GUMMI Ø74X1720	RUBBER COATED HAULM ROLLER	
31	321831	1	LAGERHUS V.SV.	BEARING HOUSING LH	
32	321832	1	LAGERHUS H.SV.	BEARING HOUSING RH	
33	870731	4	KULELAGER 6206-RS	BALL BEARING 6206-RS	
34	300189	2	BRIKKE Ø36-Ø61X2	WASHER Ø36-Ø61X2	
35	868562	4	LÅSERING INNV. I 62X2	CIRCLIP I62X2.00	
36	868606	1	STØTTERING 30X42X2.5	SUPPORT RING 30X42X2.5	
37	868430	1	LÅSERING UTV. A30X1.50	CIRCLIP A30X1.50	
38	300195	1	KJEDEHJUL 3/4" 11T-M/KON	SPROCKET 3/4" 11T	
39	300186	1	KILE 8X7X27.5	KEY	
40	228577	1	BRIKKE Ø13,5-Ø35X5 EL.GALV	WASHER Ø13,5-Ø35X5	
41	813621	1	SEKSKANTSKRUE M12X20-10.9 ELZN	HEX. BOLT M12X20-10.9	
42-45	**321836**	**1**	**AVSKRAPER STÅL MONTERT**	**STEEL SCRAPER**	
42	321837	1	AVSKRAPER SV.	SCRAPER	
44	321840	1	BESKYTTELSESDUK	SAFEGUARD	
45	839316	10	SENKSKRUE KRYSSPOR M6X16 ELZN.	REC. COUNTERSUNK SCREW M6X16	
46	860163	2	BRIKKE Ø13-Ø24X2.5 ELZN	WASHER Ø13-Ø24X2.5	
46	813660	2	SEKSKANTSKRUE M12X60-8.8 ELZN	HEX. BOLT M12X60-8.8 GALV.	
50-57	**304872**	**2**	**RISLEDERSETT**	**HAULM GUIDE ASSY**	
50	305975	1	RISLEDERRAMME SV.	HAULM GUIDE FRONT	
51	300668	2	LASK 32X6-M10/120/M10	BAR 32X6-M10/120/M10	
52	813520	4	SEKSKANTSKRUE M10X20-8.8 ELZN	HEX. BOLT M10X20-8.8 GALV.	
52	860160	4	BRIKKE Ø10.5-Ø21X2 ELZN	WASHER Ø10.5-Ø21X2	
53	300659	1	LEDESPIL M/GUMMI	HAULM GUIDE W/RUBBER	
54	300665	1	GUMMISLANGE	RUBBER HOSE	
55	300666	1	STREKKFJØR Ø2.2-Ø17.8X76	TENSION SPRING Ø2.2-Ø17.8X76	
56	300667	1	KJETTING Ø3-26X104	CHAIN Ø3-26X104	

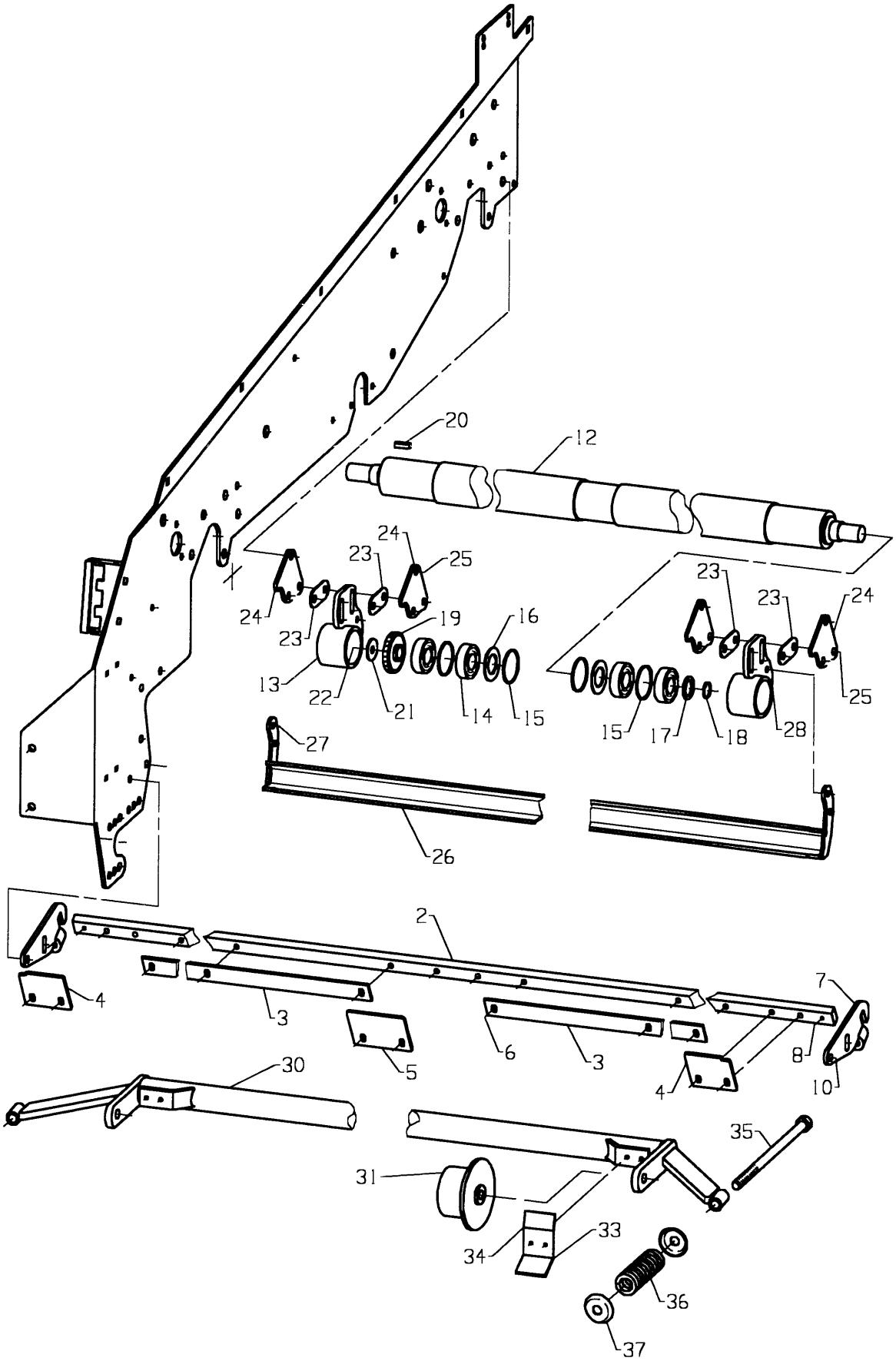
20
12
24
23
25
24
23
19
16
13
22
21
14
15
23
23
24
25
15
17
18
28
27
26
2
4
3
5
6
3
7
8
10
4
30
35
31
33
34
36
37

Fig. 16

Utgave: / Issue: 5	Redskap: / Implement: POTETHØSTER 2600 / POTATO HARVESTER 2600	Kverneland
Dato: / Date: 02-06	Enhet / Unit: FALLDEMPER / FALL DAMPER	Fig nr.: 16

Ref. No.	Delenr. Part no.	Ant. Qty.	Gjenstand	Description	Anmerkning Note
2-10	**321776**	**1**	**AVSKRAPER MONT.**	**SCRAPER ASSY**	
2	321785	1	AVSKRAPERLIST	SCRAPER RETAINER	
3	321786	2	AVSKRAPERPLATE	SCRAPER PLATE	
4	321787	2	AVSKRAPERPLATE	SCRAPER PLATE	
5	321788	1	AVSKRAPERPLATE	SCRAPER PLATE	
6	813435	12	SEKSKANTSKRUE M8X35-8.8 ELZN	HEX. BOLT M8X35-8.8 GALV.	
6	860158	12	BRIKKE Ø8.4-17X1.6 ELZN	WASHER Ø8.4-Ø17X1.6	
6	852158	12	NYLOCKMUTTER M8 ELZN.	NYLOCK NUT M8 GALV.	
7	321773	2	AVSKRAPERFESTE SV.	SCRAPER BRACKET	
8	866326	2	SPENNHYLSE 6X26	TENSION PIN 6X26X1.25	
9	867061	2	RINGPINNE Ø12 (7/16") ELZN	RING PIN 12 (7/16") GALV.	
10	813631	4	SEKSKANTSKRUE M12X30-10.9 ELZN	HEX. BOLT M12X30-10.9 ELZN	
10	860163	4	BRIKKE Ø13-Ø24X2.5 ELZN	WASHER Ø13-Ø24X2.5	
10	852162	4	NYLOCKMUTTER M12 ELZN.	NYLOCK NUT M12 GALV	
12-28	**321920**	**1**	**FALLDEMPERULL KPL.**	**FALLDAMPER ASSY**	
12	305880	1	RISRULL M.GUMMI Ø74X1720	RUBBER COATED HAULM ROLLER	
13	321924	1	LAGERHUS H.SV.	BEARING HOUSING	
14	870731	4	KULELAGER 6206-RS	BALL BEARING 6206-RS	
15	868562	4	LÅSERING INNV. I 62X2	CIRCLIP I62X2.00	
16	300189	2	BRIKKE Ø36-Ø61X2	WASHER Ø36-Ø61X2	
17	868606	1	STØTTERING 30X42X2.5	SUPPORT RING 30X42X2.5	
18	868430	1	LÅSERING UTV. A30X1.50	CIRCLIP A30X1.50	
19	300195	1	KJEDEHJUL 3/4" 11T-M/KON	SPROCKET 3/4" 11T	
20	300186	1	KILE 8X7X27.5	KEY	
21	228577	1	BRIKKE Ø13,5-Ø35X5 EL.GALV	WASHER Ø13,5-Ø35X5	
22	813620	1	SEKSKANTSKRUE M12X20-8.8 ELZN	HEX. BOLT M12X20-8.8 GALV.	
23	321928	4	SKIMS	PLATE	
24	321927	4	VIPPEPLATE	LEVER PLATE	
25	813640	6	SEKSKANTSKRUE M12X40-8.8 ELZN	HEX. BOLT M12X40-8.8 GALV	
25	860163	6	BRIKKE Ø13-Ø24X2.5 ELZN	WASHER Ø13-Ø24X2.5	
25	852162	6	NYLOCKMUTTER M12 ELZN.	NYLOCK NUT M12 GALV	
26	321930	1	AVSKRAPER SV.	SCRAPER	
27	813530	4	SEKSKANTSKRUE M10X30-8.8 ELZN	HEX. BOLT M10X30-8.8 GALV.	
27	860160	4	BRIKKE Ø10.5-Ø21X2 ELZN	WASHER Ø10.5-Ø21X2	
27	852160	4	NYLOCKMUTTER M10 ELZN.	NYLOCK NUT M10 GALV.	
28	321923	1	LAGERHUS V.SV.	BEARING HOUSING	
30-38	**321860**	**1**	**BELTEVENDEBØYLE KPL.**	**BELT TENSION ROLLER ASSY**	
30	321861	1	BELTEVENDEBØYLE SV.	BELT TENSION ROLLER	
31	301145	2	FLENSRULL Ø90 M/GUMMI KOMPL.	RUBBERCOATED ROLLER Ø90 FLANGE	
32	813890	2	SEKSKANTSKRUE M16X90-8.8 ELZN	HEX. BOLT M16X90-8.8 GALV	
32	860166	2	BRIKKE Ø17-Ø30X3 ELZN	WASHER Ø17-Ø30X3	
32	852166	2	NYLOCKMUTTER M16 ELZN.	NYLOCK NUT M16 GALV	
33	321865	2	AVSKRAPER	SCRAPER	
34	813320	4	SEKSKANTSKRUE M6X20-8.8 ELZN	HEX. BOLT M6X20-8.8 GALV	
34	860156	4	BRIKKE Ø6.6-Ø12X1.5 ELZN	WASHER Ø6.6-Ø12X1.5	
34	852156	4	NYLOCKMUTTER M6 ELZN.	NYLOCK NUT M6 GALV.	
35	301542	2	STRAMMESKRUE SV.	TENSION SCREW	
36	256627	2	TRYKKFJØR Ø8-Ø33X134	TENSION SPRING Ø8-Ø33X134	
37	256628	4	KAPSEL	CAP	
38	860166	2	BRIKKE Ø17-Ø30X3 ELZN	WASHER Ø17-Ø30X3	
38	852166	2	NYLOCKMUTTER M16 ELZN.	NYLOCK NUT M16 GALV	

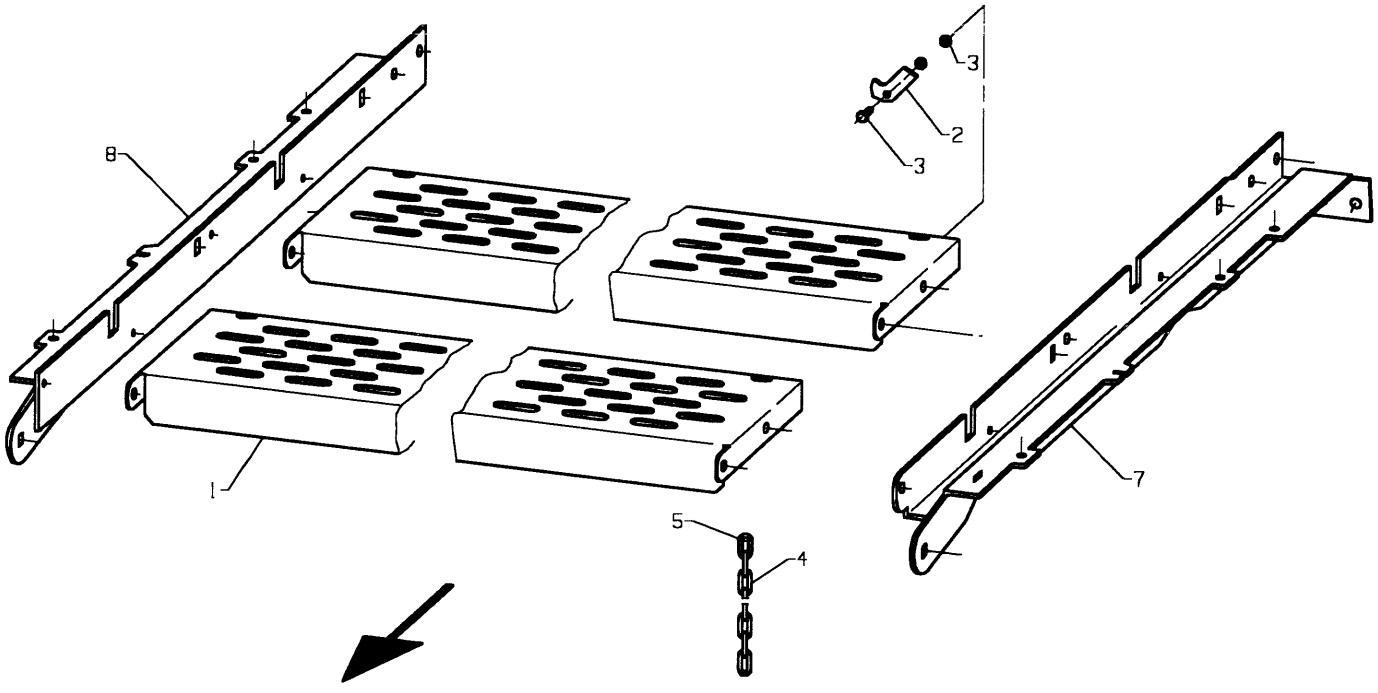

Fig. 17

Utgave: / Issue: 5	Redskap: / Implement: POTETHØSTER 2600 / POTATO HARVESTER 2600	Kverneland
Dato: / Date: 02-06	Enhet / Unit: VERNEPLATER / PROTECTION PLATES	Fig nr.: 17

Ref. No.	Delenr. Part no.	Ant. Qty.	Gjenstand	Description	Anmerkning Note
			VERNEPLATE FRAMRE	**FORWARD PROT. PLATE**	
1	306333	1	VERNEPLATE FRAMRE	FORWARD PROT. PLATE	
2	303172	2	LÅS	LOCK	
3	813320	2	SEKSKANTSKRUE M6X20-8.8 ELZN	HEX. BOLT M6X20-8.8 GALV	
3	860156	2	BRIKKE Ø6.6-Ø12X1.5 ELZN	WASHER Ø6.6-Ø12X1.5	
3	850156	4	SEKSKANTMUTTER M6-8 ELZN.	HEX. NUT M6-8 GALV.	
4	226147	2	KJETTING Ø4-19X399	CHAIN	
5	813320	4	SEKSKANTSKRUE M6X20-8.8 ELZN	HEX. BOLT M6X20-8.8 GALV	
5	850156	4	SEKSKANTMUTTER M6-8 ELZN.	HEX. NUT M6-8 GALV.	
5	852156	4	NYLOCKMUTTER M6 ELZN.	NYLOCK NUT M6 GALV.	
6	813520	2	SEKSKANTSKRUE M10X20-8.8 ELZN	HEX. BOLT M10X20-8.8 GALV.	
6	852160	2	NYLOCKMUTTER M10 ELZN.	NYLOCK NUT M10 GALV.	
7	306330	1	FESTEKANAL V.	BRACKET LH	
8	306331	1	FESTEKANAL H.	BRACKET RH	
9	821525	4	LÅSESKRUE M10X25-4.6 ELZN.	CARRIAGE BOLT M10X25-4.6 GALV.	
9	852160	4	NYLOCKMUTTER M10 ELZN.	NYLOCK NUT M10 GALV.	
	322055		**VERNESKJERM M/LÅS BAKRE**	**PROTECTION PLATE REAR**	
15	322056	1	VERNESKJERM	TOP GUARD	
16	322057	2	FESTEPLATE	PLATE	
17	813525	2	SEKSKANTSKRUE M10X25-8.8 ELZN	HEX. BOLT M10X25-8.8 GALV	
17	860160	4	BRIKKE Ø10.5-Ø21X2 ELZN	WASHER Ø10.5-Ø21X2 GALV	
17	852160	2	NYLOCKMUTTER M10 ELZN	NYLOCK NUT M10 GALV	
18	821425	2	LÅSESKRUE M8X25-4.6 ELZN	CARRIAGE BOLT M8X25-4.6 GALV	
18	860158	2	BRIKKE Ø8.4-Ø17X1.6 ELZN	WASHER Ø8.4-Ø17X1.6 GALV	
18	852158	2	NYLOCKMUTTER M8 ELZN	NYLOCK NUT M8 GALV	
19	303172	2	LÅS	LOCK	
20	813320	2	SEKSKANTSKRUE M6X20-8.8 ELZN	HEX. BOLT M6X20-8.8 GALV	
20	860156	2	BRIKKE Ø6.6-Ø12X1.5 ELZN	WASHER Ø6.6-Ø12X1.5 GALV	
20	850156	4	SEKSKANTMUTTER M6-8 ELZN	HEX. NUT M6-8 GALV	
21	226147	2	KJETTING Ø4-19X399	CHAIN Ø4-19X399	
22	813320	4	SEKSKANTSKRUE M6X20-8.8 ELZN	HEX. BOLT M6X20-8.8 GALV	
22	850156	4	SEKSKANTMUTTER M6-8 ELZN.	HEX. NUT M6-8 GALV	
22	852156	4	NYLOCKMUTTER M6 ELZN.	NYLOCK NUT M6 GALV	

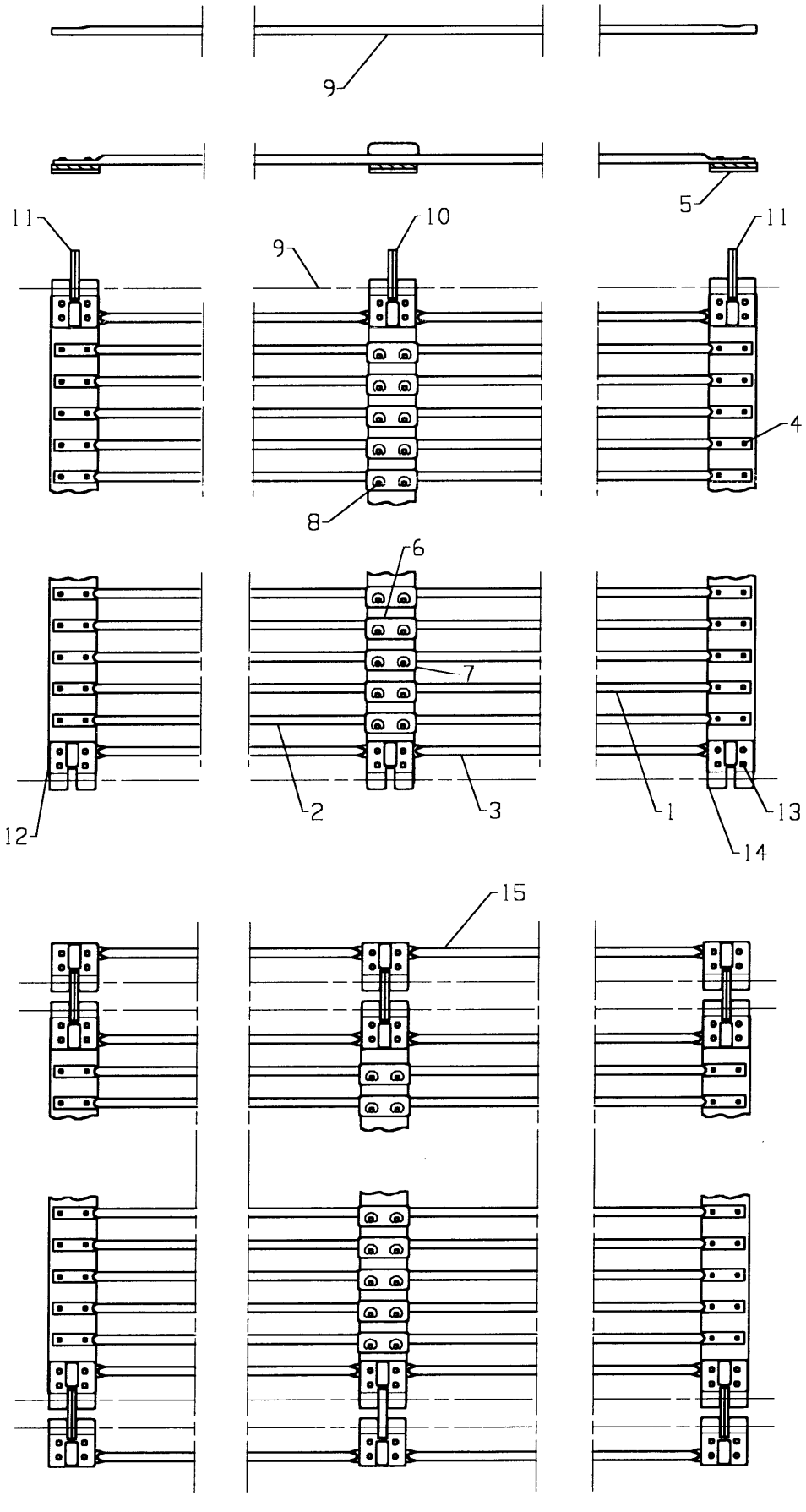

Fig. 18

Utgave: / Issue:	5	Redskap: / Implement:	POTETHØSTER 2600 POTATO HARVESTER 2600	Kverneland
Dato: / Date:	02-06	Enhet / Unit	1.BELTER 1.WEBS	Fig nr.: 18

Ref. No.	Delenr. Part no.	Ant. Qty.	Gjenstand	Description	Anmerkning Note
1a-9a	**308012**	**1**	**1.BELTE 1650X36-25 TYPE 4**	**1.WEB 1650X36-25 KVU-MOD**	
1a	308095		BELTESPIL 1650XØ11 SLETT	ROD 1650XØ11	
1aa	308098		BELTESPIL 1650XØ12 SLETT	ROD 1650XØ12	
2a	308096		BELTESPIL 1650XØ11 KLEMT	ROD 1650XØ11 W/GROOVE	
2aa	308099		BELTESPIL 1650XØ12 KLEMT	ROD 1650XØ12 W/GROOVE	
3a	309285		DELT SPIL 1650 TYPE 4 VED LÅS	SPLITTED ROD 1650 TYPE 4	
4a	862277		SENKHODENAGLE Ø5.5X20	RIVET Ø5.5 X 20	
5a	301431		KLINKEPLATE 32	RIVET PLATE	
6a	308078		SENTERKLIPS Ø11	CENTRECLIPS Ø11	
6aa	308076		SENTERKLIPS Ø12	CENTRECLIPS Ø12	
7a	308079		SENTERKLIPS KVU Ø11 M/LÅS	CENTRECLIP Ø11 W/LOCK RIDGE	
7aa	308077		SENTERKLIPS KVU Ø12 M/LÅS	CENTRECLIP Ø12 W/LOCK RIDGE	
8a	862279		SENKHODENAGLE Ø5.5X24	RIVIT Ø5.5 X 24	
9a	308097		LÅSESPIL 1650XØ11 KVU-MOD.	LOCK ROD 1650XØ11 KVU-MOD	
9a-13a	**309270**	**1**	**HENGSLESETT 36 TYPE 4 KOMPL.**	**SET OF HINGES 36,TYPE 4,CPL.**	
10a	309241		HENGSLELEDD SENTER 36 F.TYPE 4	HINGE SIDE CENTER 36 F.TYPE 4	
11a	309240		HENGSLELEDD SIDE 36 F.TYPE 4	HINGE SIDE 36 F.TYPE 4	
12a	309284		MUTTERSTYKKE M6 TYPE 4	NUT PLATE	
13a	813325		SEKSKANTSKRUE M6X25-8.8 ELZN	HEX. BOLT M6X25-8.8 GALV.	
14a	309279		HENGSLE 35 TYPE 4	HINGE 35 TYPE 4	
15a	308088	1	BELTESKJØT 1650X36-25 TYPE 4	WEB JOINING SECTION 1650X36-25	
1b-8b	**308017**	**1**	**1.BELTE 1650X40-28 TYPE 4**	**1.WEB 1650X40-28 KVU-MOD**	
1b	308095		BELTESPIL 1650XØ11 SLETT	ROD 1650XØ11 PLANE	
1bb	308098		BELTESPIL 1650XØ12 SLETT	ROD 1650XØ12 PLANE	
2b	308096		BELTESPIL 1650XØ11 KLEMT	ROD 1650XØ11 W/GROOVE	
2bb	308099		BELTESPIL 1650XØ12 KLEMT	ROD 1650XØ12 W/GROOVE	
3b	309285		DELT SPIL 1650 TYPE 4 VED LÅS	SPLITTED ROD 1650 TYPE 4	
4b	862277		SENKHODENAGLE Ø5.5X20	RIVET Ø5.5 X 20	
5b	301431		KLINKEPLATE 32	RIVET PLATE	
6b	308078		SENTERKLIPS KVU Ø11	CENTRECLIPS KVU Ø11	
6bb	308076		SENTERKLIPS KVU Ø12	CENTRECLIPS KVU Ø12	
7b	308079		SENTERKLIPS KVU Ø11 M/LÅS	CENTRECLIP Ø11 W/LOCK RIDGE	
7bb	308077		SENTERKLIPS KVU Ø12 M/LÅS	CENTRECLIP Ø12 W/LOCK RIDGE	
8b	862279		SENKHODENAGLE Ø5.5X24	RIVIT Ø5.5 X 24	
9b	308097		LÅSESPIL 1650XØ11 KVU-MOD.	LOCK ROD 1650XØ11 KVU-MOD	
10b-14b	**309271**	**1**	**HENGSLESETT 40 TYPE 4 KOMPL.**	**SET OF HINGES 40, TYPE 4 COMPL**	
10b	309284		MUTTERSTYKKE M6 TYPE 4	NUT PLATE	
11b	813325		SEKSKANTSKRUE M6X25-8.8 ELZN	HEX. BOLT M6X25-8.8 GALV.	
12b	309242		HENGSLELEDD SIDE 40 F.TYPE 4	HINGE SIDA 40 F.TYPE 4	
13b	309243		HENGSLELEDD SENTER 40 F.TYPE 4	HINGE CENTER 40 F.TYPE 4	
14b	309280		HENGSLE 40 TYPE 4	HINGE 40 TYPE 4	
15b	308089	1	BELTESKJØT 1650X40-28 TYPE 4	WEB JOINING SECTION 1650X40-28	
1c-9c	**308022**	**1**	**1.BELTE 1650X45-33 TYPE 4**	**1.WEB 1650X45-33 KVU-MOD**	
1c	308095		BELTESPIL 1650XØ11 SLETT	ROD 1650XØ11 PLANE	
1cc	308098		BELTESPIL 1650XØ12 SLETT	ROD 1650XØ12 PLANE	
2c	308096		BELTESPIL 1650XØ11 KLEMT	ROD 1650XØ11 W/GROOVE	
2cc	308099		BELTESPIL 1650XØ12 KLEMT	ROD 1650XØ12 W/GROOVE	
3c	309285		DELT SPIL 1650 TYPE 4 VED LÅS	SPLITTED ROD 1650 TYPE 4	
4c	862277		SENKHODENAGLE Ø5.5X20	RIVET Ø5.5 X 20	
5c	301431		KLINKEPLATE 32	RIVET PLATE	
6c	308078		SENTERKLIPS KVU Ø11	CENTRECLIPS KVU Ø11	
6cc	308076		SENTERKLIPS KVU Ø12	CENTRECLIPS KVU Ø12	
7c	308079		SENTERKLIPS KVU Ø11 M/LÅS	CENTRECLIP Ø11 W/LOCK RIDGE	
7cc	308077		SENTERKLIPS KVU Ø12 M/LÅS	CENTRECLIP Ø12 W/LOCK RIDGE	

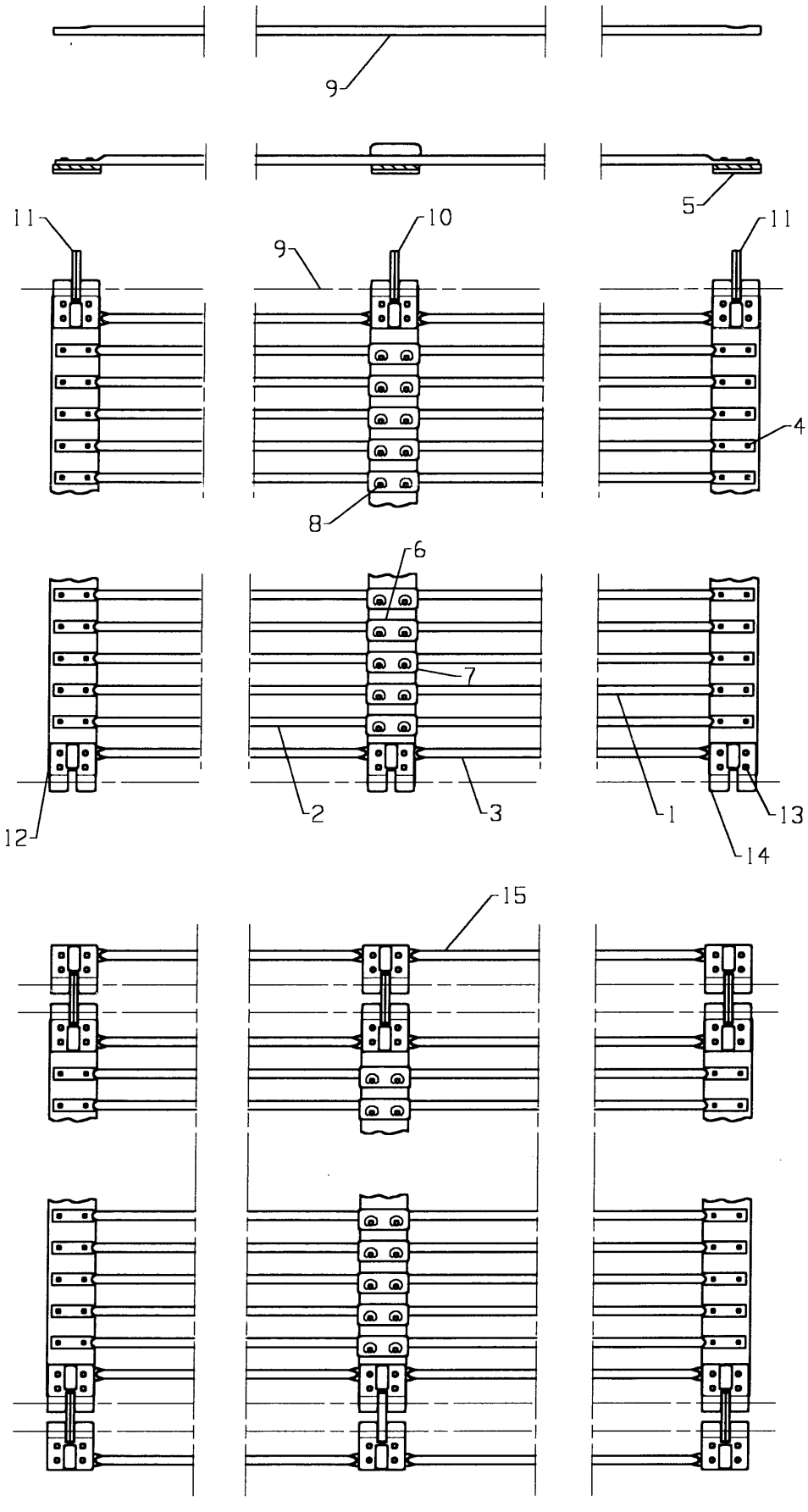

Fig. 18

Utgave: / Issue: 5	Redskap: / Implement: POTETHØSTER 2600 / POTATO HARVESTER 2600	Kverneland
Dato: / Date: 02-06	Enhet / Unit 1.BELTER / 1.WEBS	Fig nr.: 18

Ref. No.	Delenr. Part no.	Ant. Qty.	Gjenstand	Description	Anmerkning Note
8c	862279		SENKHODENAGLE Ø5.5X24	RIVIT Ø5.5 X 24	
9c	308097		LÅSESPIL 1650XØ11 KVU-MOD.	LOCK ROD 1650XØ11 KVU-MOD	
10c-14c	**309272**	**1**	**HENGSLESETT 45 TYPE 4 KOMPL.**	**SET OF HINGES 45 TYPE 4 CPL.**	
10c	309245		HENGSLELEDD SENTER 45 F.TYPE 4	JOINING LINK CENTRE P.45 TYPE4	
11c	309244		HENGSLELEDD SIDE 45 F.TYPE 4	JOINING LINK SIDE P.45 TYPE4	
12c	309284		MUTTERSTYKKE M6 TYPE 4	NUT PLATE	
13c	813325		SEKSKANTSKRUE M6X25-8.8 ELZN	HEX. BOLT M6X25-8.8 GALV.	
14c	309281		HENGSLE 45 TYPE 4	HINGE 45 TYPE 4	
15c	308090	1	BELTESKJØT 1650X45-33 TYPE 4	WEB JOINING SECTION 1650X45-33	
1d-9d	**308027**	**1**	**1.BELTE 1650X50-38 TYPE 4**	**1.WEB 1650X50-38 TYPE4**	
1d	308095		BELTESPIL 1650XØ11 SLETT	ROD 1650XØ11 PLANE	
1dd	308098		BELTESPIL 1650XØ12 SLETT	ROD 1650XØ12 PLANE	
2d	308096		BELTESPIL 1650XØ11 KLEMT	ROD 1650XØ11 W/GROOVE	
2dd	308099		BELTESPIL 1650XØ12 KLEMT	ROD 1650XØ12 W/GROOVE	
3d	309285		DELT SPIL 1650 TYPE 4 VED LÅS	SPLITTED ROD 1650 TYPE 4	
4d	862277		SENKHODENAGLE Ø5.5X20	RIVET Ø5.5 X 20	
5d	301431		KLINKEPLATE 32	RIVET PLATE	
6d	308078		SENTERKLIPS KVU Ø11	CENTERCLIPS KVU Ø11	
6dd	308076		SENTERKLIPS KVU Ø12	CENTRECLIPS KVU Ø12	
7d	308079		SENTERKLIPS KVU Ø11 M/LÅS	CENTRECLIP KVU Ø11 W/LOCK RIDGE	
7dd	308077		SENTERKLIPS KVU Ø12 M/LÅS	CENTRECLIP KVU Ø12 W/LOCK RIDGE	
8d	862279		SENKHODENAGLE Ø5.5X24	RIVIT Ø5.5 X 24	
9d	308097		LÅSESPIL 1650XØ11 KVU-MOD.	LOCK ROD 1650XØ11 KVU-MOD	
10d-14d	**309273**	**1**	**HENGSLESETT 50 TYPE 4 KOMPL.**	**SET OF HINGES 50,TYPE 4 CPL.**	
10d	309247		HENGSLELEDD SENTER 50 F.TYPE 4	JOINING LINK SIDE 50 TYPE 4	
11d	309246		HENGSLELEDD SIDE 50 F.TYPE 4	JOINING LINK SIDE 50 TYPE 4	
12d	309284		MUTTERSTYKKE M6 TYPE 4	NUT PLATE	
13d	813325		SEKSKANTSKRUE M6X25-8.8 ELZN	HEX. BOLT M6X25-8.8 GALV.	
14d	309282		HENGSLE 50 TYPE 4	HINGE 50 TYPE 4	
15d	308091	1	BELTESKJØT 1650X50-38 TYPE 4	WEB JOINING SECTION 1650X50-38	

Kverneland

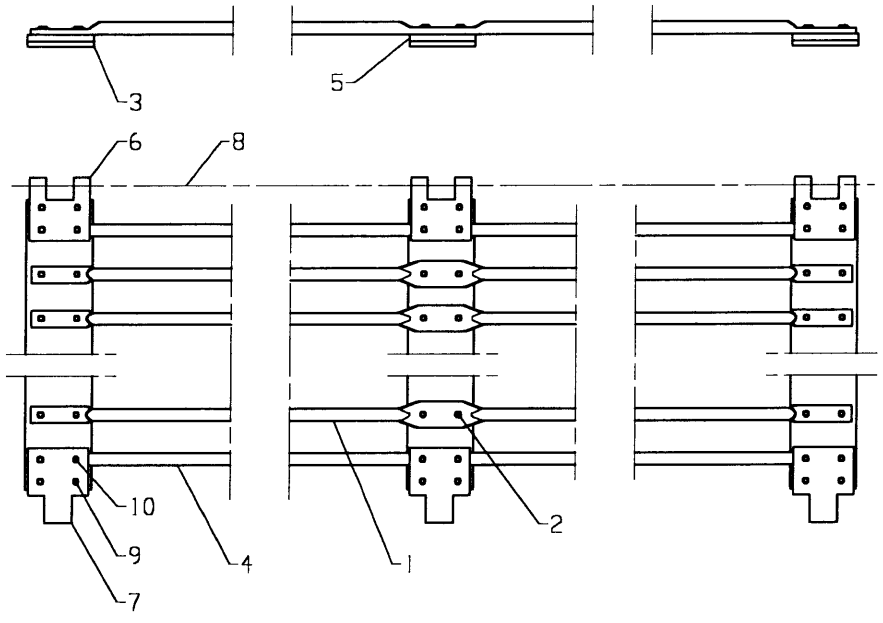

TELEWEB

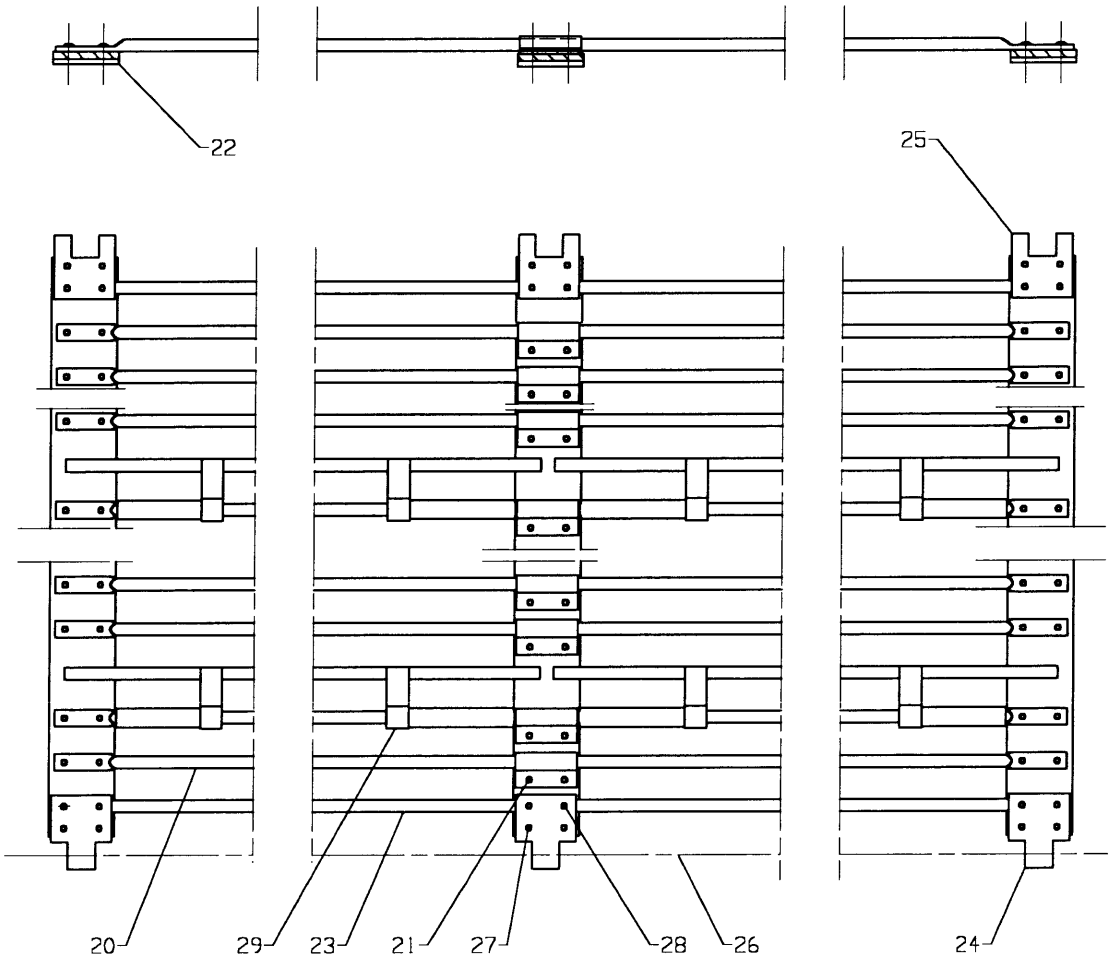

Fig. 17

Utgave: / Issue: 5	Redskap: / Implement: POTETHØSTER 2600 / POTATO HARVESTER 2600	Kverneland
Dato: / Date: 02-06	Enhet / Unit 1. BELTER + TELEBELTE / 1. WEBS + TELEWEB	Fig nr.: 18

Ref. No.	Delenr. Part no.	Ant. Qty.	Gjenstand	Description	Anmerkning Note
1-10	**308006**	**1**	**1.BELTE 1650X28-17 SUPERFLEKS**	**MAIN WEB 1650X28-17 SUPERFLEX**	
1	308034	258	SPIL Ø11X1650	ROD Ø11X1650	
2	862264	1548	SENKHODENAGLE Ø5X18	RIVET Ø5X18	
3	301431	774	KLINKEPLATE 32	RIVET PLATE	
4	308036	2	HENGSLESPIL Ø12X1640	HENGSLESPIL Ø11X1640	
5	301441	6	KLINKEPLATE FOR HENGSLE 36	HINGE RIVET PLATE 36	
6	301428	3	YTRE HENGSLELEDD 36	OUTER HINGE JOINT 36	
7	301427	3	INDRE HENGSLELEDD 36	INNER HINGE JOINT 36	
8	308032	1	LÅSESPIL Ø11X1644	LOCK ROD Ø10X1644	
9	862267	12	SENKHODENAGLE Ø5X24	RIVET Ø5X24	
10	862270	12	SENKHODENAGLE Ø5X30	RIVET Ø5X30	
20a-29	**322563**			**TELEWEB 1650X36-25 W/STONE TRAP**	
20b-29	**322573**			**TELEWEB 1650X40-29 W/STONE TRAP**	
20c-29	**322578**			**TELEWEB 1650X45-34 W/STONE TRAP**	
20	308035			ROD 1650XØ11 W/STEEL CLIPS	
21	862264			RIVET Ø5X18	
22	301431			RIVET PLATE	
23	308036			HINGE ROD Ø12X1640 TYPE 3	
24a	301427			INNER HINGE JOINT 36	
25a	301428			OUTER HINGE JOINT 36	
24b-c	301433			INNER HINGE JOINT 42	
25b-c	301434			OUTER HINGE JOINT 42	
26	308032			LOCK ROD Ø10X1644	
27	862267			RIVET Ø5X24	
28	862270			RIVET Ø5X30	
29a	322595			STONE TRAP 1650X36	
29b-c	322595			STONE TRAP 1650X40	

Kverneland

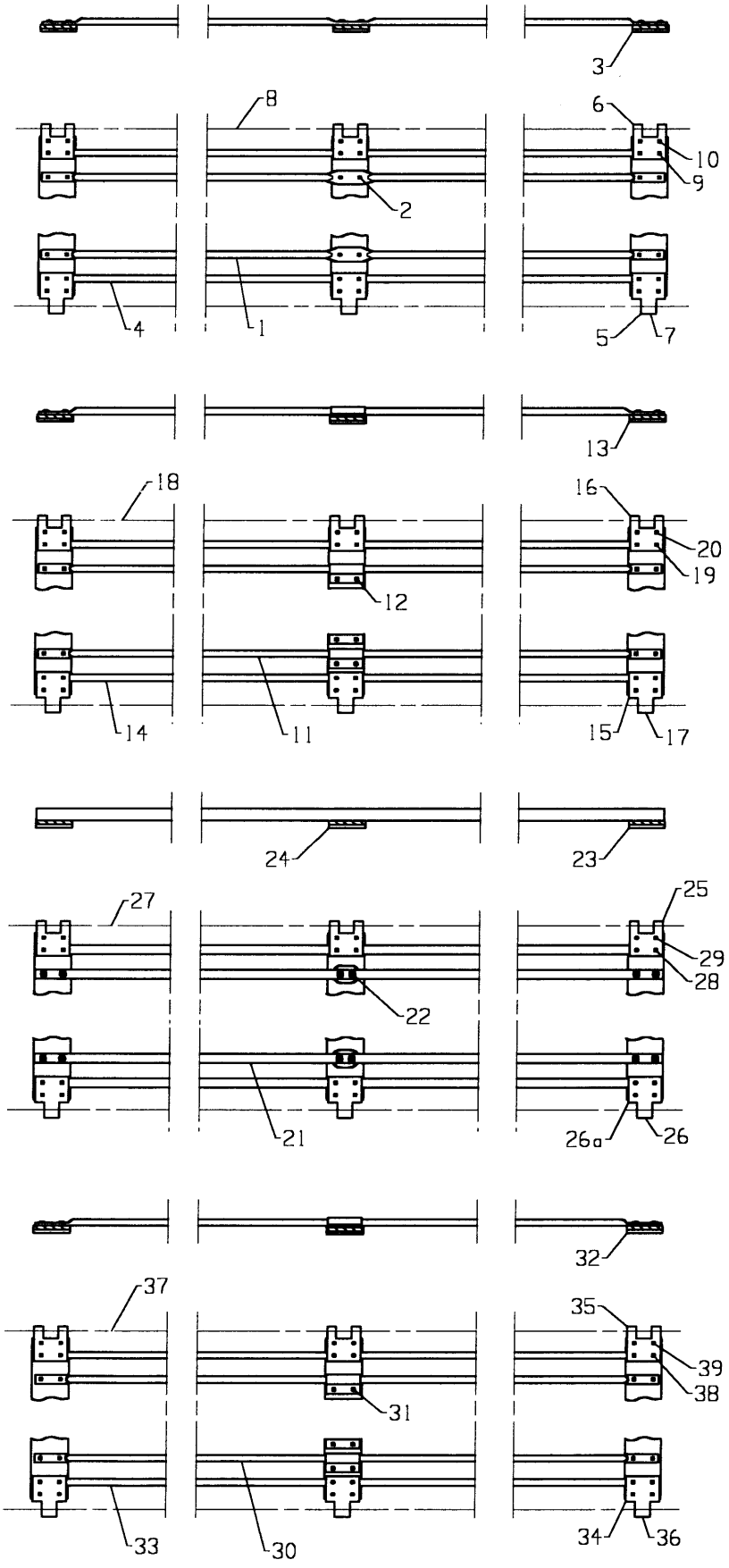

Fig. 19

Utgave: / Issue: 5	Redskap: / Implement: POTETHØSTER 2600 / POTATO HARVESTER 2600	Kverneland
Dato: / Date: 02-06	Enhet / Unit 2.BELTER / 2.WEBS	Fig nr.: 19

Ref. No.	Delenr. Part no.	Ant. Qty.	Gjenstand	Description	Anmerkning Note
1-10	**322555**	**1**	**2.BELTE 1650X28-17**	**2.WEB 1650X28-17**	
1	308034		SPIL Ø11X1650	ROD Ø11X1650	
2	862264		SENKHODENAGLE Ø5X18	RIVET Ø5X18	
3	301431		KLINKEPLATE 32	RIVET PLATE	
4	308036		HENGSLESPIL Ø12X1640	HENGSLESPIL Ø11X1640	
5	301441		KLINKEPLATE FOR HENGSLE 36	HINGE RIVET PLATE 36	
6	301428		YTRE HENGSLELEDD 36	OUTER HINGE JOINT 36	
7	301427		INDRE HENGSLELEDD 36	INNER HINGE JOINT 36	
8	308032		LÅSESPIL Ø11X1644	LOCK ROD Ø10X1644	
9	862267		SENKHODENAGLE Ø5X24	RIVET Ø5X24	
10	862270		SENKHODENAGLE Ø5X30	RIVET Ø5X30	
11-20	**322560**	**1**	**2.BELTE 1650X36-25**	**2.WEB 1650X36-25**	
11	308035		BELTESPIL 1650XØ11 M.STÅLKLIPS	ROD 1650XØ11 W/STEEL CLIPS	
12	862264		SENKHODENAGLE Ø5X18	RIVET Ø5X18	
13	301431		KLINKEPLATE 32	RIVET PLATE	
14	308036		HENGSLESPIL Ø12X1640	HENGSLESPIL Ø11X1640	
15	301441		KLINKEPLATE FOR HENGSLE 36	HINGE RIVET PLATE 36	
16	301428		YTRE HENGSLELEDD 36	OUTER HINGE JOINT 36	
17	301427		INDRE HENGSLELEDD 36	INNER HINGE JOINT 36	
18	308032		LÅSESPIL Ø11X1644	LOCK ROD Ø10X1644	
19	862267		SENKHODENAGLE Ø5X24	RIVET Ø5X24	
20	862270		SENKHODENAGLE Ø5X30	RIVET Ø5X30	
21-29	**322565**	**1**	**2.BELTE 1650X40-25 M/GUMMI**	**2.WEB 1650X40-25 W/RUBBER**	
21	308056		BELTESPIL 1650XØ11 M.VULK.GUMM	ROD 1650XØ11 WITH RUBBER	
22	862264		SENKHODENAGLE Ø5X18	RIVET Ø5X18	
23	301431		KLINKEPLATE 32	RIVET PLATE	
24	301432		KLINKEPLATE MIDTRE 20	CENTRE RIVET PLATE	
25	301434		YTRE HENGSLELEDD 42	OUTER HINGE JOINT 42	
26	301433		INDRE HENGSLELEDD 42	INNER HINGE JOINT 42	
26a	301442		KLINKEPLATE FOR HENGSLE 42	HINGE RIVET PLATE 42	
27	308032		LÅSESPIL Ø11X1644	LOCK ROD Ø10X1644	
28	862267		SENKHODENAGLE Ø5X24	RIVET Ø5X24	
29	862270		SENKHODENAGLE Ø5X30	RIVET Ø5X30	
30a-39a	**322570**	**1**	**2.BELTE 1650X40-29**	**2.WEB 1650X40-29**	
30a	308035		BELTESPIL 1650XØ11 M.STÅLKLIPS	ROD 1650XØ11 W/STEEL CLIPS	
31a	862264		SENKHODENAGLE Ø5X18	RIVET Ø5X18	
32a	301431		KLINKEPLATE 32	RIVET PLATE	
33a	308036		HENGSLESPIL Ø12X1640	HENGSLESPIL Ø11X1640	
34a	301442		KLINKEPLATE FOR HENGSLE 42	HINGE RIVET PLATE 42	
35a	301434		YTRE HENGSLELEDD 42	OUTER HINGE JOINT 42	
36a	301433		INDRE HENGSLELEDD 42	INNER HINGE JOINT 42	
37a	308032		LÅSESPIL Ø11X1644	LOCK ROD Ø10X1644	
38a	862267		SENKHODENAGLE Ø5X24	RIVET Ø5X24	
39a	862270		SENKHODENAGLE Ø5X30	RIVET Ø5X30	
30b-39b	**322575**	**1**	**2.BELTE 1650X45-34**	**2.WEB 1650X45-34**	
30b	308035		BELTESPIL 1650XØ11 M.STÅLKLIPS	ROD 1650XØ11 W/STEEL CLIPS	
31b	862264		SENKHODENAGLE Ø5X18	RIVET Ø5X18	
32b	301431		KLINKEPLATE 32	RIVET PLATE	
33b	308036		HENGSLESPIL Ø12X1640	HENGSLESPIL Ø11X1640	
34b	301442		KLINKEPLATE FOR HENGSLE 42	HINGE RIVET PLATE 42	
35b	301434		YTRE HENGSLELEDD 42	OUTER HINGE JOINT 42	
36b	301433		INDRE HENGSLELEDD 42	INNER HINGE JOINT 42	
37b	308032		LÅSESPIL Ø11X1644	LOCK ROD Ø10X1644	
38b	862267		SENKHODENAGLE Ø5X24	RIVET Ø5X24	
39b	862270		SENKHODENAGLE Ø5X30	RIVET Ø5X30	

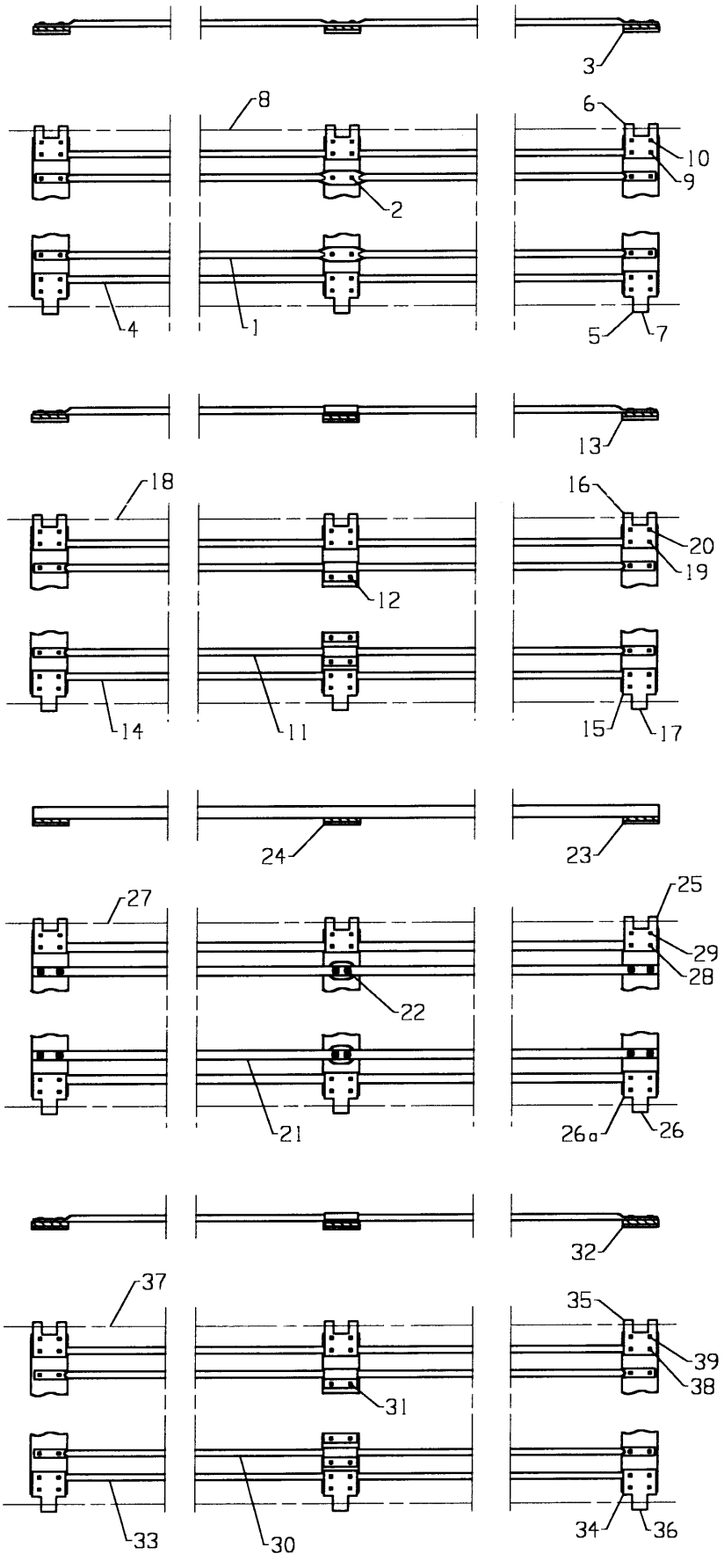
3
8
6
10
9
2
4
1
5
7
13
18
16
20
19
12
14
11
15
17
24
23
27
25
29
28
22
21
26a
26
32
37
35
39
38
31
33
30
34
36

Fig. 19

Utgave: / Issue: 5	Redskap: / Implement: POTETHØSTER 2600 / POTATO HARVESTER 2600	Kverneland
Dato: / Date: 02-06	Enhet / Unit 2.BELTER / 2.WEBS	Fig nr.: 19

Ref. No.	Delenr. Part no.	Ant. Qty.	Gjenstand	Description	Anmerkning Note
30c-39c	**322580**	**1**	**2.BELTE 1650X50-39**	**2.WEB 1650X50-39**	
30c	308035		BELTESPIL 1650XØ11 M.STÅLKLIPS	ROD 1650XØ11 W/STEEL CLIPS	
31c	862264		SENKHODENAGLE Ø5X18	RIVET Ø5X18	
32c	301431		KLINKEPLATE 32	RIVET PLATE	
33c	308036		HENGSLESPIL Ø12X1640	HENGSLESPIL Ø11X1640	
34c	301442		KLINKEPLATE FOR HENGSLE 42	HINGE RIVET PLATE 42	
35c	301434		YTRE HENGSLELEDD 42	OUTER HINGE JOINT 42	
36c	301433		INDRE HENGSLELEDD 42	INNER HINGE JOINT 42	
37c	308032		LÅSESPIL Ø11X1644	LOCK ROD Ø10X1644	
38c	862267		SENKHODENAGLE Ø5X24	RIVET Ø5X24	
39c	862270		SENKHODENAGLE Ø5X30	RIVET Ø5X30	

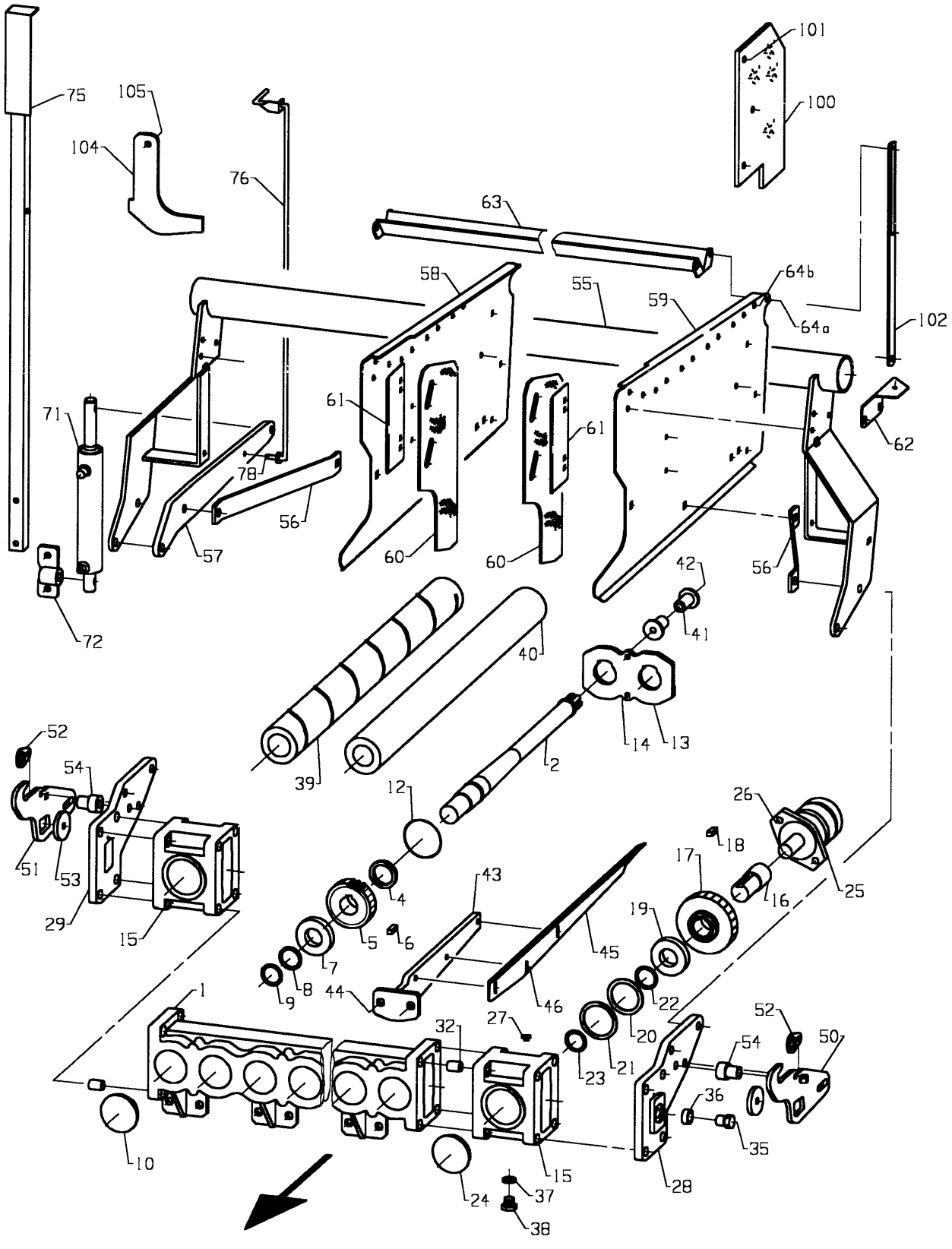
75
105
104
76
101
100
63
58
55
59
64b
64a
102
71
61
61
62
78
56
57
60
60
56
72
42
41
40
39
14
13
2
52
54
12
26
18
17
51
53
4
43
16
25
29
15
5
6
19
7
45
8
9
44
46
22
1
32
27
20
52
50
54
23
21
36
35
10
15
28
24
37
38

Fig. 20

Utgave: / Issue: 5	Redskap: / Implement: POTETHØSTER 2600 / POTATO HARVESTER 2600	Kverneland
Dato: / Date: 02-06	Enhet / Unit: AKSIALRENSERULLER / AXIAL CLEANINGS ROLLERS	Fig nr.: 20

Ref. No.	Delenr. Part no.	Ant. Qty.	Gjenstand	Description	Anmerkning Note
1-46	**333960**	**1**	**AKSIALRULLEBORD 18R**	**AX.ROLLER TABLE 18R**	
1-38	**333950**	**1**	**AKSIALGEARKASSE 18R MONTERT**	**AXIAL GEAR BOX 18R ASSY**	
1-14	**333936**	**3**	**AKSIALGEARKASSE 6R MONTERT**	**AXIAL GEAR BOX 6R ASSY**	
1	333906	1	AKSIALGEARKASSE 6R STØPT	AXIAL GEAR BOX 6R	
2	333914	6	AKSIALRULLAKSEL M/LAGER	AX.ROLLER AXLE W/BEARING	
4	333922	6	BRIKKE Ø45.5-Ø60X9.8	WASHER	
5	320035	6	TANNHJUL M3.5/27T-Ø40	GEAR M3.5/27T-Ø40	
6	400181	6	KILE 12 X 8 32	KEY 12 X 8 32	
7	870742	6	KULELAGER 6208-2RS	BALL BEARING 6208-2RS	
8	868608	6	STØTTERING 40X50X2.5	SUPPORT RING 40X50X2.5	
9	868440	6	LÅSERING UTV. A40X1.75	CIRCLIP A40X1.75	
10	333915	6	AKSIALAKSEL-LOKK	AX.ROLLER CAP	
11	873540	6	SMØRENIPPEL M6 RETT	GREASE NIPPLE M6 STRAIGHT	
12	872081	6	O-RING 84.5X3.00	O-RING	
13	333918	3	LAGERDEKSEL SV.	BEARING COVER	
14	825425	6	SYL.SKR.M/6KT.HOL M10X25-12.9	CYLINDER SCREW	
15-27	**333931**	**1**	**AKSIALGEARKASSE DRIVENHET V.**	**AXIAL GEAR DRIVE UNIT LH**	
15-27	**333932**	**1**	**AKSIALGEARKASSE DRIVENHET H.**	**AXIAL GEAR DRIVE UNIT RH**	
15	333901	1	AKSIALGEARKASSE DRIVENHET STØP	AXIAL GEAR DRIVE UNIT	
16	333911	1	MOTORAKSEL	MOTOR AXLE	
17	320036	1	TANNHJUL M3.5/35T-Ø40	GEAR M3.5/35T-Ø40	
18	400181	1	KILE 12 X 8 32	KEY 12 X 8 32	
19	870742	1	KULELAGER 6208-2RS	BALL BEARING 6208-2RS	
20	868612	1	STØTTERING 63X80X3	SUPPORT RING 63X80X3.0	
21	868580	1	LÅSERING INNV. I 80X2.5	CIRCLIP I80X2.50	
22	868608	1	STØTTERING 40X50X2.5	SUPPORT RING 40X50X2.5	
23	868440	1	LÅSERING UTV. A40X1.75	CIRCLIP A40X1.75	
24	333915	1	AKSIALAKSEL-LOKK	AX.ROLLER CAP	
25	306687	1	OLJEMOTOR TRW MF-80 Ø25 AKSEL	OIL MOTOR TRW MF-80 Ø25 SHAFT	
*	411164		PAKN.SETT FOR TRW-MF 760 MOTOR	SEAL KIT FOR TRW-MF 760 MOTOR	
26	825640	2	SYL.SKR. M/6KT.HOL M12X40-12.9	CYLINDER SCREW M12X40-12.9	
27	860163	2	BRIKKE Ø13-Ø24X2.5 ELZN	WASHER Ø13-Ø24X2.5	
28	333924	1	ENDEGAVL V.SV.	END PLATE LH	
29	333925	1	ENDEGAVL H.SV.	END PLATE RH	
30a	825860	16	SYL.SKR. M/6KT.HOL M16X60-12.9	CYLINDER SCREW M16-60-12.9	
30b	825870	8	SYL.SKR. M/6KT.HOL M16X70-12.9	CYLINDER SCREW M16X70-12.9	
31	813860	8	SEKSKANTSKRUE M16X60-8.8 ELZN	HEX. BOLT M16X60-8.8 GALV.	
32	333929	24	HYLSE Ø16-Ø20X25	COLLAR	
23	860166	8	BRIKKE Ø17-Ø30X3 ELZN	WASHER Ø17-Ø30X3	
34	852166	24	NYLOCKMUTTER M16 ELZN.	NYLOCK NUT M16 GALV	
25	320047	2	LÅSEPLUGG R1/2"	PLUG	
36	320048	2	HYLSE Ø22-Ø30X11	COLLAR	
37	306571	2	PLUGG 1/2" BSP M/PAKN.	PLUG 1/2" BSP W/SEAL	
38	219669	2	PAKNINGSRING 1/2" BOND SEAL	SEAL 1/2" PP 45-D	
39	320013	9	AKS.RULL SPIRAL 82x950/SPLINE	AUGER AX. ROLLER 82x950/SPLINE	
40	320018	9	AKS.RULL SLETT 82x950/SPLINE	SMOOTH AX.ROLLER 82x950/SPLINE	
41	320168	36	DISTANSEHYLSE	COLLAR	
42	813705	18	SEKSKANTSKRUE M12X150-8.8 ELZN	HEX. BOLT M12X150-8.8	
43	333940	9	AVSKRAPERFESTE SV.	SCRAPER BRACKET	
44	813850	18	SEKSKANTSKRUE M16X50-8.8 ELZN	HEX. BOLT M16X50-8.8 GALV.	
44	860166	36	BRIKKE Ø17-Ø30X3 ELZN	WASHER Ø17-Ø30X3	
44	852166	36	NYLOCKMUTTER M16 ELZN.	NYLOCK NUT M16 GALV	
45	333944	9	AVSKRAPER AKSIALRULL	SCRAPER AXIAL ROLLER	
46	813535	27	SEKSKANTSKRUE M10X35-8.8 ELZN	HEX. BOLT M10X35-8.8 GALV.	
46	860160	54	BRIKKE Ø10.5-Ø21X2 ELZN	WASHER Ø10.5-Ø21X2	
46	852160	27	NYLOCKMUTTER M10 ELZN.	NYLOCK NUT M10 GALV.	

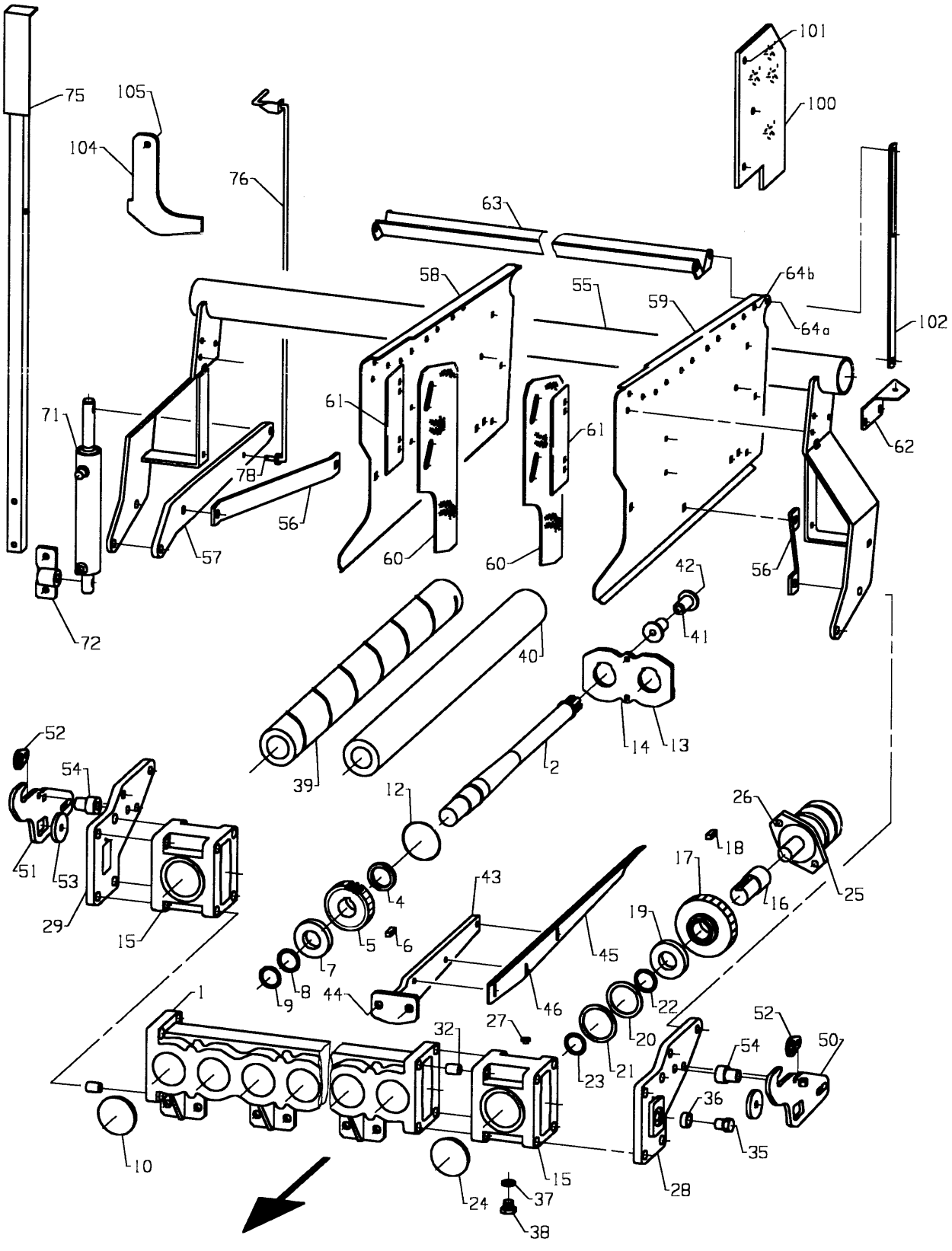
75
105
104
76
101
100
63
58
55
59
64b
64a
102
71
61
61
62
78
56
57
60
60
56
72
42
41
40
39
14
13
2
52
54
12
26
18
17
51
53
4
43
25
16
29
15
5
6
19
7
45
8
9
44
46
22
1
32
27
20
52
50
54
23
21
36
35
10
15
28
24
37
38

Fig. 20

Utgave: / Issue: 5	Redskap: / Implement: POTETHØSTER 2600 / POTATO HARVESTER 2600	Kverneland
Dato: / Date: 02-06	Enhet / Unit: AKSIALRENSERULLER / AXIAL CLEANINGS ROLLERS	Fig nr.: 20

Ref. No.	Delenr. Part no.	Ant. Qty.	Gjenstand	Description	Anmerkning Note
50	322004	1	VIPPEBRAKETT V.SV.	TILTING BRACKET LH	
51	322005	1	VIPPEBRAKETT H.SV.	TILTING BRACKET RH	
52	322008	2	LESENØKKEL	LOCKING KEY	
53	440187	2	BRIKKE ø13-ø60X8	WASHER	
54	322009	2	HYLSE	COLLAR	
55	322011	1	HEISBOM SV.	CONNECTING BAR	
56	322022	2	AVSTIVER	STAY	
57	322025	1	ARM	ARM	
58	322020	1	SKJERM V.	GUARD LH	
59	322021	1	SKJERM H.	GUARD RH	
60	322026	2	GUMMIDUK	RUBBER	
61	322027	2	FESTE	BRACKET	
62	322007	2	SLANGEBRAKETT	HOSE BRACKET	
63	323437	1	STØTTE	STAY	
64a	810650	2	6KT. SKR.HELGJ.M12X50-8.8 ELZN	HEX. BOLT THR. M12X50 GALV	
64a	860163	4	BRIKKE Ø13-Ø24X2.5 ELZN	WASHER Ø12-Ø24X2.5 GALV	
64a	852162	3	NYLOCKMUTTER M12 ELZN	NYLOCK NUT M12 GALV	
64b	813625	2	SEKSKANTSKRUE M12X25-8.8 ELZN	HEX. BOLT M12X25-8.8 GALV	
64b	860163	4	BRIKKE Ø13-Ø24X2.5 ELZN	WASHER Ø13-Ø24X2.5 GALV	
64b	852162	3	NYLOCKMUTTER M12 ELZN	NYLOCK NUT M12 GALV	
70	813520	2	SEKSKANTSKRUE M10X20-8.8 ELZN	HEX. BOLT M10X20-8.8 GALV.	
70	852160	2	NYLOCKMUTTER M10 ELZN.	NYLOCK NUT M10 GALV.	
71	310089	1	SYLINDER DV Ø40/Ø25X300+180	CYLINDER DA Ø40/Ø25X300+180	
72	322028	1	SYLINDERFESTE SV.		
75-78	**322060**	**1**	**VINKELINDIKATOR KOMPL.**	**ANGLE INDICATOR ASSY**	
75	322065	1	VINKELINDIKATOR SV.	ANGLE INDICATOR	-260140
76	322070	1	VISERSTANG SV.	INDICATOR	
77	410842	1	BRIKKE Ø10.5-Ø22X4	WASHER	
78	865164	1	SPLINT 3.2X14 GALV.	SPLIT PIN 3,2 X 14	
			MONTERINGSSETT	**MOUNTING KIT**	
100	322018	2	LEDEGUMMI	GUIDING RUBBER PLATE	
101	821435	6	LÅSESKRUE M8X35-4.6 ELZN	CARRIAGE BOLT M8X35-4.6 GALV	
101	860158	6	BRIKKE Ø8.4-Ø17X1.6 ELZN	WASHER Ø8.4-Ø17X1.6 GALV	
101	852158	6	NHYLOCKMUTTER M8 ELZN	NYLOCK NUT M8 GALV	
102	324192	2	SLISSE		
103	813630	2	SEKSKANTSKRUE M12X30-8.8 ELZN	HEX. BOLT M12X30-8.8 GALV	
103	860163	4	BRIKKE Ø13-Ø24X2.5 ELZN	WASHER Ø13-Ø24X2.5 GALV	
103	852162	2	NYLOCKMUTTER M12 ELZN	NYLOCK NUT M12 GALV	
104	324191	1	FESTE FOR FORDELER	BRACKET FOR DISTRIBUTOR	
105	813630	1	SEKSKANTSKRUE M12X30-8.8 ELZN	HEX. BOLT M12X30-8.8 GALV	
105	860163	2	BRIKKE Ø13-Ø24X2.5 ELZN	WASHER Ø13-Ø24X2.5 GALV	
105	852162	1	NYLOCKMUTTER M12 ELZN	NYLOCK NUT M12 GALV	

Kverneland

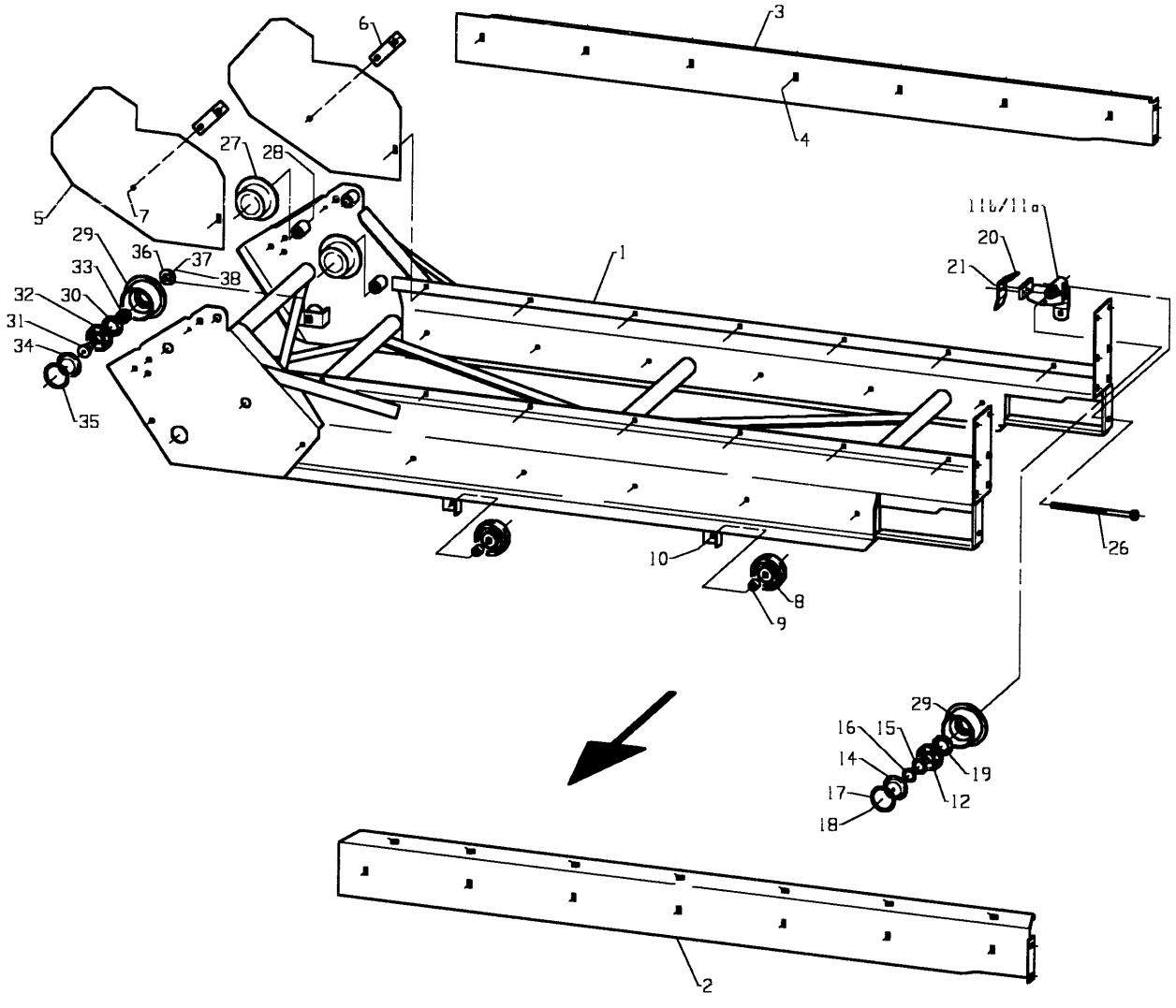

Fig. 21

Utgave: / Issue: 5	Redskap: / Implement: POTETHØSTER 2600 / POTATO HARVESTER 2600	Kverneland
Dato: / Date: 02-06	Enhet / Unit: ELEVATOR 900 / ELEVATOR 900	Fig nr.: 21

Ref. No.	Delenr. Part no.	Ant. Qty.	Gjenstand	Description	Anmerkning Note
1	306812	1	BOTNRAMME SV.	LOWER ELEVATOR SECTION FRAME	
2	306831	1	SKJERM F.	GUARD FORWARD	
3	306832	1	SKJERM B.	GUARD REAR	
4	821416	16	LÅSESKRUE M8X16-4.6 ELZN.	CARRIAGE BOLT M8X16-4.6 GALV.	
4	860158	16	BRIKKE Ø8.4-17X1.6 ELZN	WASHER Ø8.4-Ø17X1.6	
4	850158	16	SEKSKANTMUTTER M8-8 ELZN.	HEX. NUT M8-8 GALV.	
5	306821	2	LEDDSKJERM	GUARD	
6	306822	2	VINKEL	BRACKET	
7	821420	8	LÅSESKRUE M8X20-4.6 ELZN.	CARRIAGE BOLT M8X20-4.6 GALV.	
7	860158	8	BRIKKE Ø8.4-17X1.6 ELZN	WASHER Ø8.4-Ø17X1.6	
7	850158	4	SEKSKANTMUTTER M8-8 ELZN.	HEX. NUT M8-8 GALV.	
7	852158	4	NYLOCKMUTTER M8 ELZN.	NYLOCK NUT M8 GALV.	
8	255692	16	PLASTHJUL Ø100 M/KULEL.OG TETN	ROLLER Ø100 W/BALL BEARING	
9	301155	16	HYLSE Ø10.4-Ø25X26	SPACER Ø10.4-Ø25X26	
10	813590	16	SEKSKANTSKRUE M10X90-8.8 ELZN	HEX. BOLT M10X90-8.8 GALV.	
10	860160	16	BRIKKE Ø10.5-Ø21X2 ELZN	WASHER Ø10.5-Ø21X2	
10	852160	16	NYLOCKMUTTER M10 ELZN.	NYLOCK NUT M10 GALV.	
11a-22	**301110**	**1**	**VENDERULL FRAMRE KOMPL.**	**FRONT ELEVATOR TENSION ROLLER**	
11b-22	**301111**	**1**	**VENDERULL BAKRE KOMPL.**	**REAR ELEVATOR TENSION ROLLER**	
11a	301112	1	GLIDESKO FRAMRE SV.	FRONT ROLLER BRACKET	
11b	301113	1	GLIDESKO BAKRE SV.	REAR ROLLER BRACKET	
12	870830	1	KULELAGER 6306	BALL BEARING 6306	
13	300401	1	RULL	BELT ROLLER	
14	300232	1	DEKSEL Ø71.8 M/NIPPEL	CAP Ø71.8 AND GREASE NIPPLE	
15	868606	1	STØTTERING 30X42X2.5	SUPPORT RING 30X42X2.5	
16	868430	1	LÅSERING UTV. A30X1.50	CIRCLIP A30X1.50	
17	868572	1	LÅSERING INNV. I 72X2.5	CIRCLIP I72X2.5	
18	873541	1	SMØRENIPPEL M6-45GR.	GREASE NIPPLE M6-45DEG.	
19	871356	1	TETNINGSRING 3556/10	OIL SEAL MIM 3556	
20	301117	1	AVSKRAPER	SCRAPER	
21	813320	2	SEKSKANTSKRUE M6X20-8.8 ELZN	HEX. BOLT M6X20-8.8 GALV	
21	852156	2	NYLOCKMUTTER M6 ELZN.	NYLOCK NUT M6 GALV.	
22	866455	1	SPENNHYLSE 8X55	LOCK PIN 8X55	
26	810714	2	6KT.SKR.HELGJ.M12X240-8.8ELZN	HEX. BOLT THREADEDM12X240-8.8	
26	860163	2	BRIKKE Ø13-Ø24X2.5 ELZN	WASHER Ø13-Ø24X2.5	
26	850162	2	SEKSKANTMUTTER M12-8 ELZN.	HEX. NUT M12-8 GALV.	
27	301145	4	FLENSRULL Ø90 M/GUMMI KOMPL.	RUBBERCOATED ROLLER Ø90	
28	813903	4	SEKSKANTSKRUE M16X130-8.8 ELZN	HEX. BOLT M16x130-8.8 GALV.	
29-38	**310752**	**2**	**BELTERULL KOMPL.**	**BELT ROLLER ASSY**	
29	300401	1	RULL	BELT ROLLER	
30	871356	1	TETNINGSRING 3556/10	OIL SEAL MIM 3556	
31	310753	1	AKSEL	SHAFT	
32	870830	1	KULELAGER 6306	BALL BEARING 6306	
33	310755	1	HYLSE Ø20-Ø35X20	SPACER Ø20-Ø35X20	
34	300231	1	DEKSEL Ø71.8	CAP Ø71.8	
35	868572	1	LÅSERING INNV. I 72X2.5	CIRCLIP I72X2.5	
36	300521	1	KLEMSKIVE	WASHER	
37	873545	1	SMØRENIPPEL M8X1.25 RETT	GREASE NIPPLE M8X1.25	
38	850166	1	SEKSKANTMUTTER M16-8 ELZN.	HEX. NUT M16 GALV	

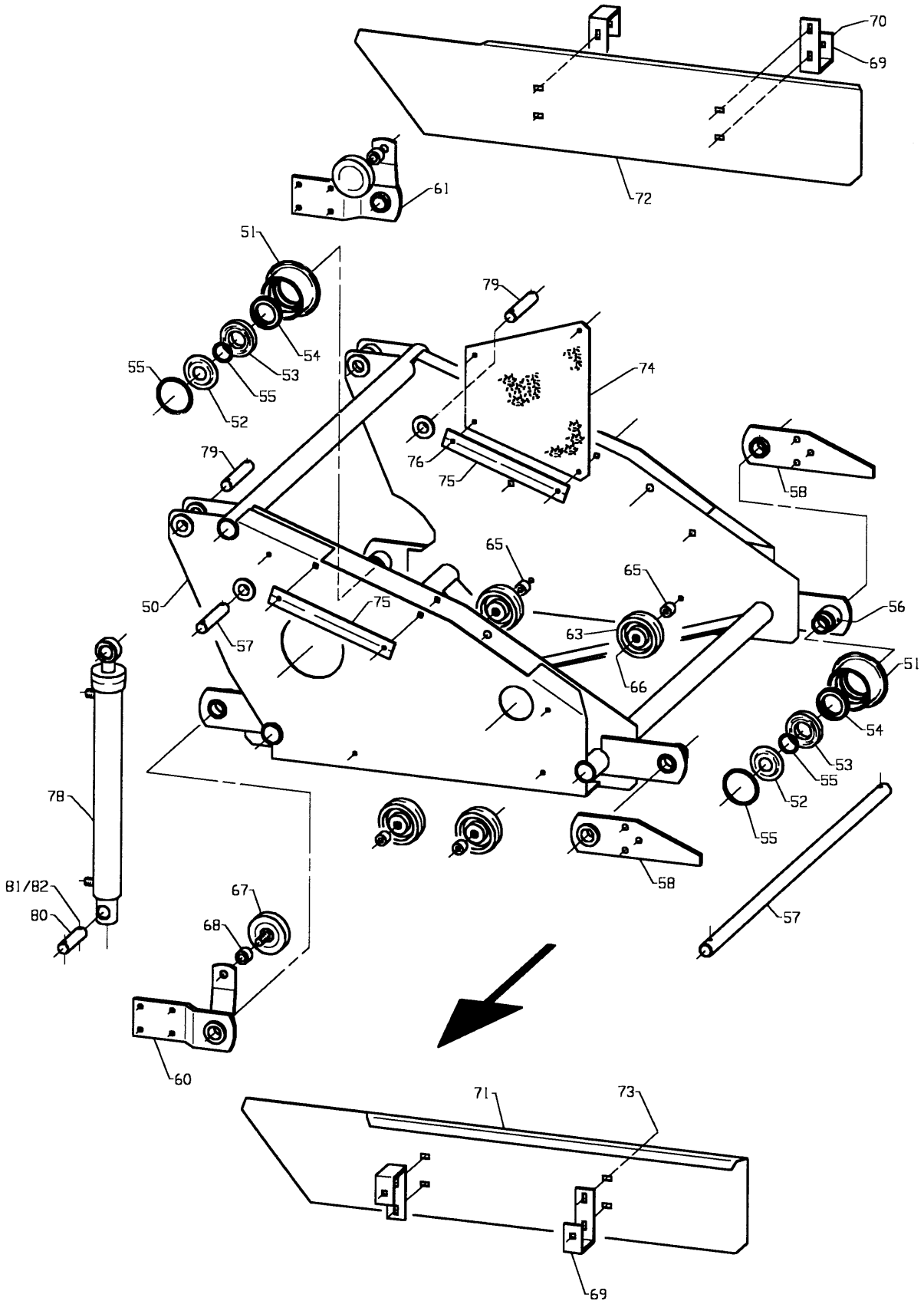
70
69
72
61
51
79
54
53
55
55
52
74
76
75
79
58
65
65
50
75
56
63
57
66
51
54
53
55
52
55
78
58
81/82
80
67
68
57
60
71
73
69

Fig. 21

Utgave: / Issue: 5	Redskap: / Implement: POTETHØSTER 2600 / POTATO HARVESTER 2600	Kverneland
Dato: / Date: 02-06	Enhet / Unit: ELEVATOR 900 / ELEVATOR 900	Fig nr.: 21

Ref. No.	Delenr. Part no.	Ant. Qty.	Gjenstand	Description	Anmerkning Note
50	306842	1	UNDRE MIDTRAMME SV.	LOWER CENTRE SECTION FRAME	
51	300402	4	RULL	ROLLER	
52	301139	4	DEKSEL Ø79.5	COVER	
53	870740	4	KULELAGER 6208	BALL BEARING 6208	
54	871475	4	TETNINGSRING 4872/12 BASL	OIL SEAL 4872/12 BASL	
55	868580	4	LÅSERING INNV. I 80X2.5	CIRCLIP I80X2.50	
55	868440	4	LÅSERING UTV. A40X1.75	CIRCLIP A40X1.75	
56	873540	4	SMØRENIPPEL M6 RETT	GREASE NIPPLE M6	
57	306880	2	AKSEL NEDRE	SHAFT	
58	306876	1	YTTERLENKE F. SV.	LINK ARM FORWARD	
59	306877	1	YTTERLENKE B. SV.	LINK ARM REAR	
60	306872	1	LEDD FRAMRE SV.	JOINT FORWARD	
61	306873	1	LEDD BAKRE SV.	JOINT REAR	
62	866450	4	SPENNHYLSE 8X50	TENSION PIN 8X50X1.5	
63	255692	4	PLASTHJUL Ø100 M/KULEL.OG TETN	ROLLER Ø100 W/BALL BEARING	
65	301155	4	HYLSE Ø10.4-Ø25X26	SPACER Ø10.4-Ø25X26	
66	813600	4	SEKSKANTSKRUE M10X100-8.8 ELZN	HEX. BOLT M10X100-8.8 GALV.	
66	860160	4	BRIKKE Ø10.5-Ø21X2 ELZN	WASHER Ø10.5-Ø21X2	
66	850160	4	SEKSKANTMUTTER M10-8 ELZN.	HEX. NUT M10-8 GALV.	
67	301144	2	STØTTERULL Ø90 M/GUMMI KOMPL.	RUBBERCOATED SUPPORT ROLLER 90	
68	301059	2	HYLSE Ø16.5-Ø30X23	SPACER Ø16.5-Ø30X25	
69	306856	4	BØYLE	BRACKET	
70	821525	4	LÅSESKRUE M10X25-4.6 ELZN.	CARRIAGE BOLT M10X25-4.6 GALV.	
70	860160	4	BRIKKE Ø10.5-Ø21X2 ELZN	WASHER Ø10.5-Ø21X2	
70	850160	4	SEKSKANTMUTTER M10-8 ELZN.	HEX. NUT M10-8 GALV.	
71	306857	1	SKJERM FRAMRE	GUARD FORWARD	
72	306858	1	SKJERM BAKRE	GUARD REAR	
73	821420	8	LÅSESKRUE M8X20-4.6 ELZN.	CARRIAGE BOLT M8X20-4.6 GALV.	
73	860158	8	BRIKKE Ø8.4-17X1.6 ELZN	WASHER Ø8.4-Ø17X1.6	
73	850158	8	SEKSKANTMUTTER M8-8 ELZN.	HEX. NUT M8-8 GALV.	
74	306853	2	GUMMISKJERM	RUBBER PLATE	
75	306854	4	KLEMMLIST	RETAINER	
76	821420	8	LÅSESKRUE M8X20-4.6 ELZN.	CARRIAGE BOLT M8X20-4.6 GALV.	
76	860158	8	BRIKKE Ø8.4-17X1.6 ELZN	WASHER Ø8.4-Ø17X1.6	
76	852158	8	NYLOCKMUTTER M8 ELZN.	NYLOCK NUT M8 GALV.	
77	813630	8	SEKSKANTSKRUE M12X30-8.8 ELZN	HEX. BOLT M12X30-8.8 GALV.	
77	860163	8	BRIKKE Ø13-Ø24X2.5 ELZN	WASHER Ø13-Ø24X2.5	
77	852162	8	NYLOCKMUTTER M12 ELZN.	NYLOCK NUT M12 GALV	
78	306804	2	SYLINDER DV Ø50/28X563+370	CYLINDER DA Ø50/28X563+370	
*	300828		SYLINDERPAKNINGSSETT Ø50/Ø28	CYLINDER SEAL KIT Ø50/Ø28	
79	306882	2	BOLT Ø25-Ø8.4/114/Ø8.4	BOLT Ø25-Ø8.4/114/Ø8.4	
80	306883	2	BOLT Ø25-Ø8.4/88/Ø8.4	BOLT Ø25-Ø8.4/88/Ø8.4	
81	860175	8	BRIKKE Ø26-Ø44X4 ELZN	WASHER Ø25.3-Ø44X4	
82	865440	8	SPLINT 8X40 GALV.	SPLIT PIN 8X40 GALV.	

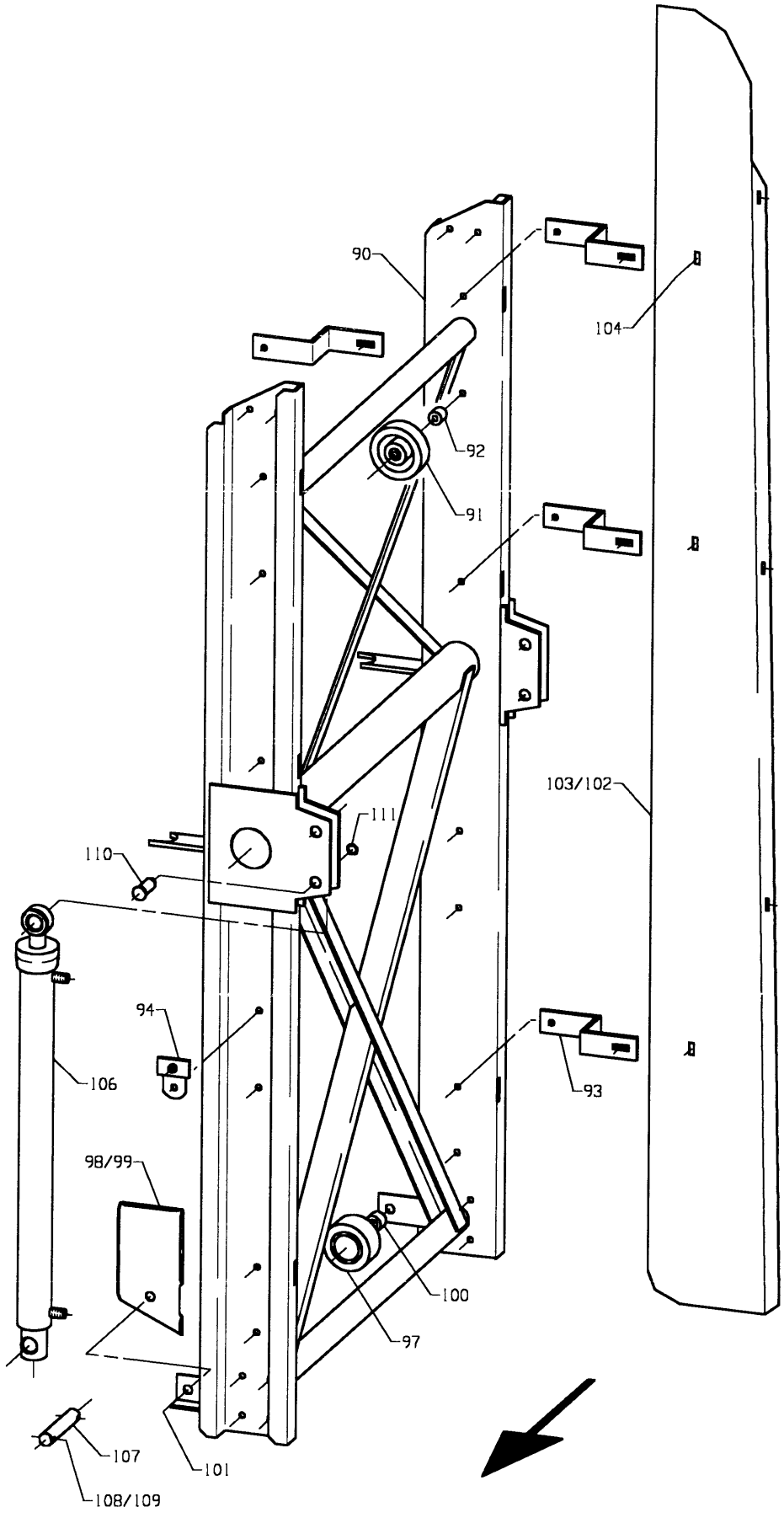

Fig. 21

Utgave: / Issue: 5	Redskap: / Implement: POTETHØSTER 2600 / POTATO HARVESTER 2600	Kverneland
Dato: / Date: 02-06	Enhet / Unit: ELEVATOR 900 / ELEVATOR 900	Fig nr.: 21

Ref. No.	Delenr. Part no.	Ant. Qty.	Gjenstand	Description	Anmerkning Note
90	306861	1	MIDTRAMME SV.	MID FRAME W..	
91	255692	8	PLASTHJUL Ø100 M/KULEL.OG TETN	ROLLER Ø100 W/BALL BEARING	
92	301155	8	HYLSE Ø10.4-Ø25X26	SPACER Ø10.4-Ø25X26	
93	301220	6	STOLPE KORT	BAR SHORT	
94	300858	6	SLANGEFESTE SV.	HOSE BRACKET	
95	813600	8	SEKSKANTSKRUE M10X100-8.8 ELZN	HEX. BOLT M10X100-8.8 GALV.	
96	813530	2	SEKSKANTSKRUE M10X30-8.8 ELZN	HEX. BOLT M10X30-8.8 GALV.	
97	301144	2	STØTTERULL Ø90 M/GUMMI KOMPL.	RUBBERCOATED SUPPORT ROLLER 90	
98	306834	1	TRINSEDEKSEL F.	ROLLER COVER FORWARD	
99	306835	1	TRINSEDEKSEL B.	ROLLER COVER REAR	
100	301059	2	HYLSE Ø16.5-Ø30X23	SPACER Ø16.5-Ø30X25	
101	850166	2	SEKSKANTMUTTER M16-8 ELZN.	HEX. NUT M16 GALV	
101	860816	2	FJØRSKIVE 16 ELZN	SPRING WASHER 16	
102	306886	1	SKJERM FRAMRE	GUARD FORWARD	
103	306887	1	SKJERM BAKRE	GUARD REAR	
104	821416	6	LÅSESKRUE M8X16-4.6 ELZN.	CARRIAGE BOLT M8X16-4.6 GALV.	
104	850158	6	SEKSKANTMUTTER M8-8 ELZN.	HEX. NUT M8-8 GALV.	
104	860158	6	BRIKKE Ø8.4-17X1.6 ELZN	WASHER Ø8.4-Ø17X1.6	
105	813530	8	SEKSKANTSKRUE M10X30-8.8 ELZN	HEX. BOLT M10X30-8.8 GALV.	
105	860160	8	BRIKKE Ø10.5-Ø21X2 ELZN	WASHER Ø10.5-Ø21X2	
105	852160	8	NYLOCKMUTTER M10 ELZN.	NYLOCK NUT M10 GALV.	
106	306805	2	SYLINDER DV Ø50/28X740+550	CYLINDER DA Ø50/28X740+550	
*	300828		SYLINDERPAKNINGSSETT Ø50/Ø28	CYLINDER SEAL KIT Ø50/Ø28	
107	306882	2	BOLT Ø25-Ø8.4/114/Ø8.4	BOLT Ø25-Ø8.4/114/Ø8.4	
108	860175	4	BRIKKE Ø26-Ø44X4 ELZN	WASHER Ø25.3-Ø44X4	
109	865440	4	SPLINT 8X40 GALV.	SPLIT PIN 8X40 GALV.	
110	301060	2	SPORBOLT M/HODE Ø19X47	PIN Ø19X47	
111	868715	2	SPORRYTTER 15	CIRCLIP "E"-TYPE 15	

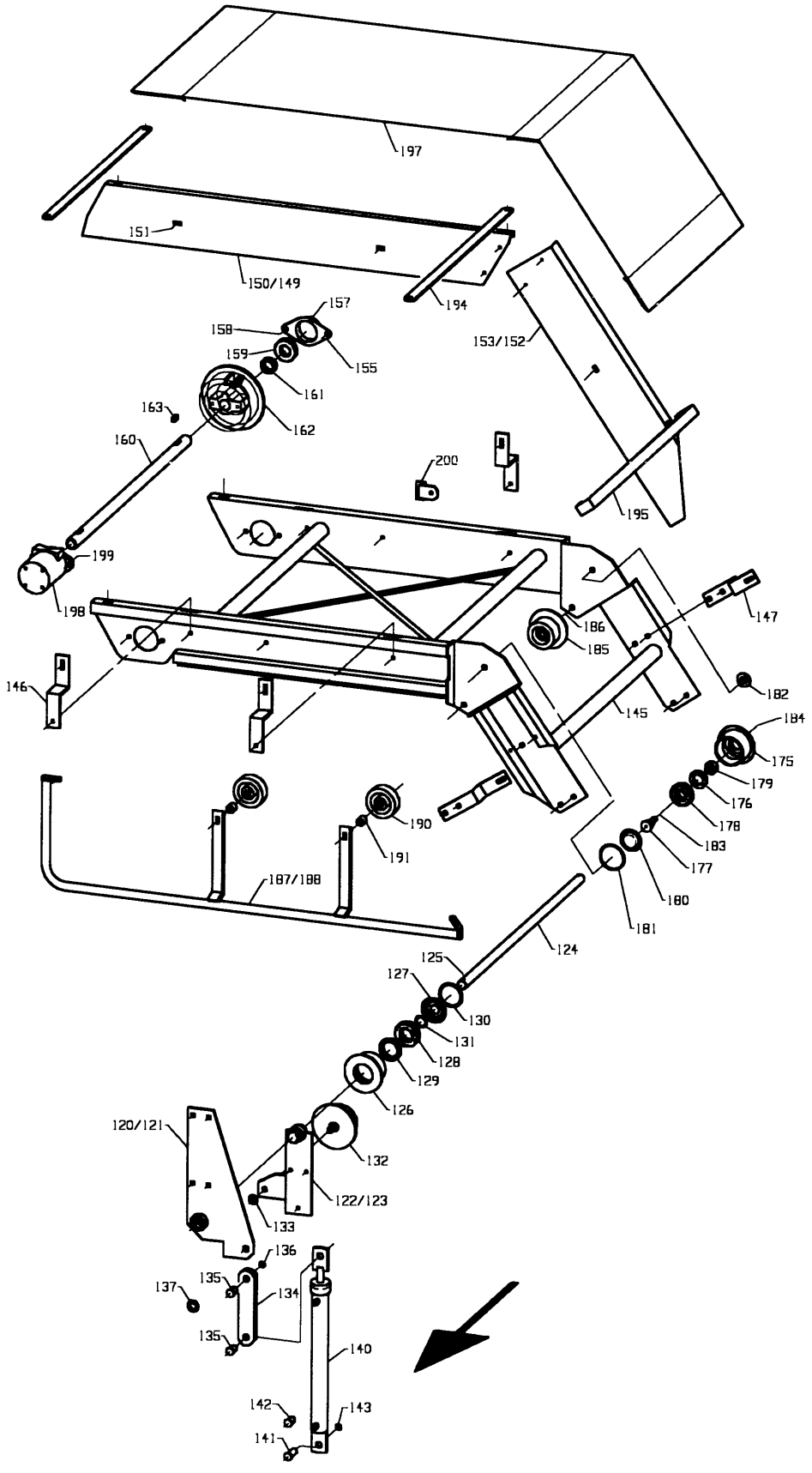
197
151
150/149
194
157
158
159
155
161
162
163
160
153/152
200
195
199
198
147
186
185
146
182
145
184
175
179
176
178
183
177
180
181
190
191
187/188
124
125
127
130
131
128
129
126
120/121
132
122/123
133
136
135
137
134
135
140
142
143
141

Fig. 21

Utgave: / Issue: 5	Redskap: / Implement: POTETHØSTER 2600 / POTATO HARVESTER 2600	Kverneland
Dato: / Date: 02-06	Enhet / Unit: ELEVATOR 900 / ELEVATOR 900	Fig nr.: 21

Ref. No.	Delenr. Part no.	Ant. Qty.	Gjenstand	Description	Anmerkning Note
120-137	**306927**	**1**	**LEDDAKSEL ØVRE KOMPL.**	**LEDDAKSEL ØVRE KOMPL.**	
120	301122	1	YTTERLENKE FRAMRE SV	FRONT OUTER LINK	
121	301123	1	YTTERLENKE BAKRE SV	REAR OUTER LINK	
122	301130	1	INNERLENKE FRAMRE SV	FRONT INNER LINK	
123	301131	1	INNERLENKE BAKRE SV	REAR INNER LINK	
124	306928	1	AKSEL	SHAFT	
125	866450	2	SPENNHYLSE 8X50	TENSION PIN 8X50X1.5	
126	300402	2	RULL	ROLLER	
127	301139	2	DEKSEL Ø79.5	COVER	
128	870740	2	KULELAGER 6208	BALL BEARING 6208	
129	871475	2	TETNINGSRING 4872/12 BASL	OIL SEAL 4872/12 BASL	
130	868580	2	LÅSERING INNV. I 80X2.5	CIRCLIP I80X2.50	
131	868440	2	LÅSERING UTV. A40X1.75	CIRCLIP A40X1.75	
132	301142	2	FLENSRULL Ø110 M/GUMMI	RUBBERCOATED ROLLER Ø110	
133	860166	2	BRIKKE Ø17-Ø30X3 ELZN	WASHER Ø17-Ø30X3	
134	301126	2	SYLINDERLENKE SV.	CYLINDER LINK	
135	301129	2	SPORBOLT M/HODE Ø20X27	PIN Ø20X27	
136	868715	2	SPORRYTTER 15	CIRCLIP "E"-TYPE 15	
137	860170	2	BRIKKE Ø21-Ø37X3 ELZN	WASHER Ø21-Ø37X3	
138	813530	5	SEKSKANTSKRUE M10X30-8.8 ELZN	HEX. BOLT M10X30-8.8 GALV.	
138	860160	5	BRIKKE Ø10.5-Ø21X2 ELZN	WASHER Ø10.5-Ø21X2	
138	852160	5	NYLOCKMUTTER M10 ELZN.	NYLOCK NUT M10 GALV.	
139	813535	1	SEKSKANTSKRUE M10X35-8.8 ELZN	HEX. BOLT M10X35-8.8 GALV.	
139	860160	1	BRIKKE Ø10.5-Ø21X2 ELZN	WASHER Ø10.5-Ø21X2	
139	852160	1	NYLOCKMUTTER M10 ELZN.	NYLOCK NUT M10 GALV.	
140	300816	2	SYLINDER DV Ø40/Ø20X590+350	CYLINDER DA Ø40/Ø20X590+350	
*	300831		SYLINDERPAKNINGSSETT Ø40/Ø20	CYLINDER SEAL KIT Ø40/Ø20	
141	301060	2	SPORBOLT M/HODE Ø19X47	PIN Ø19X47	
142	301129	2	SPORBOLT M/HODE Ø20X27	PIN Ø20X27	
143	868715	4	SPORRYTTER 15	CIRCLIP "E"-TYPE 15	
145-200	**306931**	**1**	**TOPPRAMME KOMPL.**	**TOP FRAME ASSY**	
145	306933	1	TOPPRAMME SV.	TOP FRAME W.	
146	301220	4	STOLPE KORT	BAR SHORT	
147	301221	2	STOLPE LANG	BAR LONG	
148	813525	4	SEKSKANTSKRUE M10X25-8.8 ELZN	HEX. BOLT M10X25-8.8 GALV.	
148	852160	4	NYLOCKMUTTER M10 ELZN.	NYLOCK NUT M10 GALV.	
149	301224	1	TOPPSKJERM BAKRE	FRONT TOP GUARD	
150	301225	1	TOPPSKJERM FRAMRE	REAR TOP GUARD	
151	821416	6	LÅSESKRUE M8X16-4.6 ELZN.	CARRIAGE BOLT M8X16-4.6 GALV.	
152	301226	1	LEDDSKJERM FRAMRE	FRONT GUARD	
153	301227	1	LEDDSKJERM BAKRE	REAR GUARD	
154	821316	4	LÅSESKRUE M6X16-4.6 ELZN.	CARRIAGE BOLT M6X16-4.6 GALV.	
154	860155	4	BRIKKE Ø6.4-Ø18X1.5 ELZN	WASHER Ø6.6-Ø18X1.5	
155	411649	1	LAGERHUS Ø72	BEARING HOUSING Ø72	
157	873540	1	SMØRENIPPEL M6 RETT	GREASE NIPPLE M6	
158	813625	2	SEKSKANTSKRUE M12X25-8.8 ELZN	HEX. BOLT M12X25-8.8 GALV	
158	852162	2	NYLOCKMUTTER M12 ELZN.	NYLOCK NUT M12 GALV	
159	870736	1	KULELAGER 6207-RS	BALL BEARING 6207-RS	
160	306947	1	DRIVAKSEL	DRIVE SHAFT	
161	301229	1	HYLSE Ø35.5-Ø48X18	SPACER Ø35.5-Ø48X18	
162	300403	2	BELTEDREV	BELT ROLLER	
163	301232	2	KILE 10X8X30	KEY	
164	813545	4	SEKSKANTSKRUE M10X45-8.8 ELZN	HEX. BOLT M10X45 8.8	
175-184	**310752**	**2**	**BELTERULL KOMPL.**	**BELT ROLLER ASSY**	
175	300401	1	RULL	BELT ROLLER	
176	871356	1	TETNINGSRING 3556/10	OIL SEAL MIM 3556	
177	310753	1	AKSEL	SHAFT	
178	870830	1	KULELAGER 6306	BALL BEARING 6306	
179	310755	1	HYLSE Ø20-Ø35X20	SPACER Ø20-Ø35X20	
180	300231	1	DEKSEL Ø71.8	CAP Ø71.8	
181	868572	1	LÅSERING INNV. I 72X2.5	CIRCLIP I72X2.5	

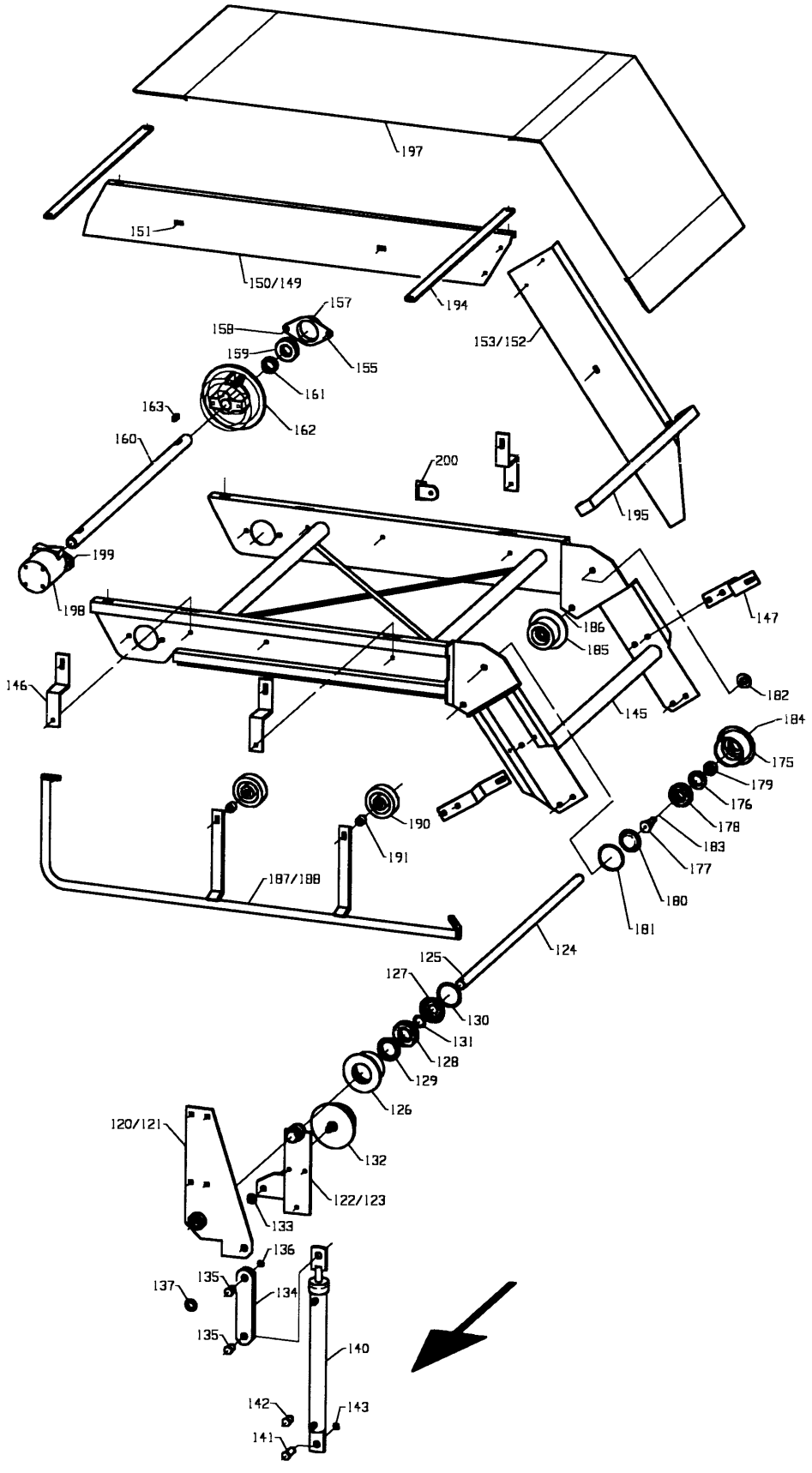
197
151
150/149
194
157
158
159
155
161
162
163
160
153/152
200
195
199
198
147
186
185
146
145
182
184
175
179
176
178
183
177
180
181
190
191
187/188
124
125
127
130
131
128
129
126
120/121
132
122/123
133
136
135
137
134
135
140
142
143
141

Fig. 21

Utgave: / Issue: 5	Redskap: / Implement: POTETHØSTER 2600 / POTATO HARVESTER 2600	Kverneland
Dato: / Date: 02-06	Enhet / Unit ELEVATOR 900 / ELEVATOR 900	Fig nr.: 21

Ref. No.	Delenr. Part no.	Ant. Qty.	Gjenstand	Description	Anmerkning Note
182	300521	1	KLEMSKIVE	WASHER	
183	873545	1	SMØRENIPPEL M8X1.25 RETT	GREASE NIPPLE M8X1.25	
184	850166	1	SEKSKANTMUTTER M16-8 ELZN.	HEX. NUT M16 GALV	
185	301145	2	FLENSRULL Ø90 M/GUMMI KOMPL.	RUBBERCOATED ROLLER Ø90	
186	813880	2	SEKSKANTSKRUE M16X80-8.8 ELZN	HEX. BOLT M16X80-8.8 GALV	
186	852166	2	NYLOCKMUTTER M16 ELZN.	NYLOCK NUT M16 GALV	
186	860166	4	BRIKKE Ø17-Ø30X3 ELZN	WASHER Ø17-Ø30X3	
187	301213	1	BØYLE FRAMRE SV.	FRONT RAIL	
188	301214	1	BØYLE BAKRE SV.	REAR RAIL	
189	821420	4	LÅSESKRUE M8X20-4.6 ELZN.	CARRIAGE BOLT M8X20-4.6 GALV.	
189	860158	4	BRIKKE Ø8.4-17X1.6 ELZN	WASHER Ø8.4-Ø17X1.6	
189	852158	4	NYLOCKMUTTER M8 ELZN.	NYLOCK NUT M8 GALV.	
190	255692	4	PLASTHJUL Ø100 M/KULEL.OG TETN	ROLLER Ø100 W/BALL BEARING	
191	301155	4	HYLSE Ø10.4-Ø25X26	SPACER Ø10.4-Ø25X26	
192	813601	1	SEKSKANTSKRUE M10X110-8.8 ELZN	HEX. BOLT M10X110-8.8 ELZN	
192	860160	1	BRIKKE Ø10.5-Ø21X2 ELZN	WASHER Ø10.5-Ø21X2	
192	852160	1	NYLOCKMUTTER M10 ELZN.	NYLOCK NUT M10 GALV.	
193	813600	3	SEKSKANTSKRUE M10X100-8.8 ELZN	HEX. BOLT M10X100-8.8 GALV.	
193	860160	3	BRIKKE Ø10.5-Ø21X2 ELZN	WASHER Ø10.5-Ø21X2	
193	852160	3	NYLOCKMUTTER M10 ELZN.	NYLOCK NUT M10 GALV.	
194	306944	2	DUKHOLDER ØVRE	UPPER CANVAS BAR	
195	306946	1	DUKHOLDER N. SPESIAL	LOWER CANVAS BAR N. SPECIAL	
196	821416	6	LÅSESKRUE M8X16-4.6 ELZN.	CARRIAGE BOLT M8X16-4.6 GALV.	
196	860158	4	BRIKKE Ø8.4-17X1.6 ELZN	WASHER Ø8.4-Ø17X1.6	
197	306943	1	DUK	CANVAS COVER,ELEVATOR END2400	
198	432010	1	OLJEMOTOR TRW MF-190 Ø25 AKSEL	OIL MOTOR MF190	
*	411164		PAKN.SETT FOR TRW-MF MOTOR	SEAL KIT TRW-MF MOTOR	
*	411163		KOMMUTATORPAKNING TRW MF-160	COMMUTATOR SEAL TRW MF-160	
199	813635	2	SEKSKANTSKRUE M12X35-8.8 ELZN	HEX. BOLT M12X35-8.8 GALV	
199	852162	2	NYLOCKMUTTER M12 ELZN.	NYLOCK NUT M12 GALV	
200	300585	3	AKSEL	SHAFT	
201	821525	4	LÅSESKRUE M10X25-4.6 ELZN.	CARRIAGE BOLT M10X25-4.6 GALV.	
201	860160	4	BRIKKE Ø10.5-Ø21X2 ELZN	WASHER Ø10.5-Ø21X2	
201	852160	4	NYLOCKMUTTER M10 ELZN.	NYLOCK NUT M10 GALV.	
202	821530	2	LÅSESKRUE M10X30-4.6 ELZN.	CARRIAGE BOLT M10X30-4.6 GALV	
202	860160	2	BRIKKE Ø10.5-Ø21X2 ELZN	WASHER Ø10.5-Ø21X2	
202	852160	2	NYLOCKMUTTER M10 ELZN.	NYLOCK NUT M10 GALV.	
203	821535	2	LÅSESKRUE M10X35-4.6 ELZN.	CARRIAGE BOLT M10X35-4.6 GALV.	
203	860160	2	BRIKKE Ø10.5-Ø21X2 ELZN	WASHER Ø10.5-Ø21X2	
203	852160	2	NYLOCKMUTTER M10 ELZN.	NYLOCK NUT M10 GALV.	

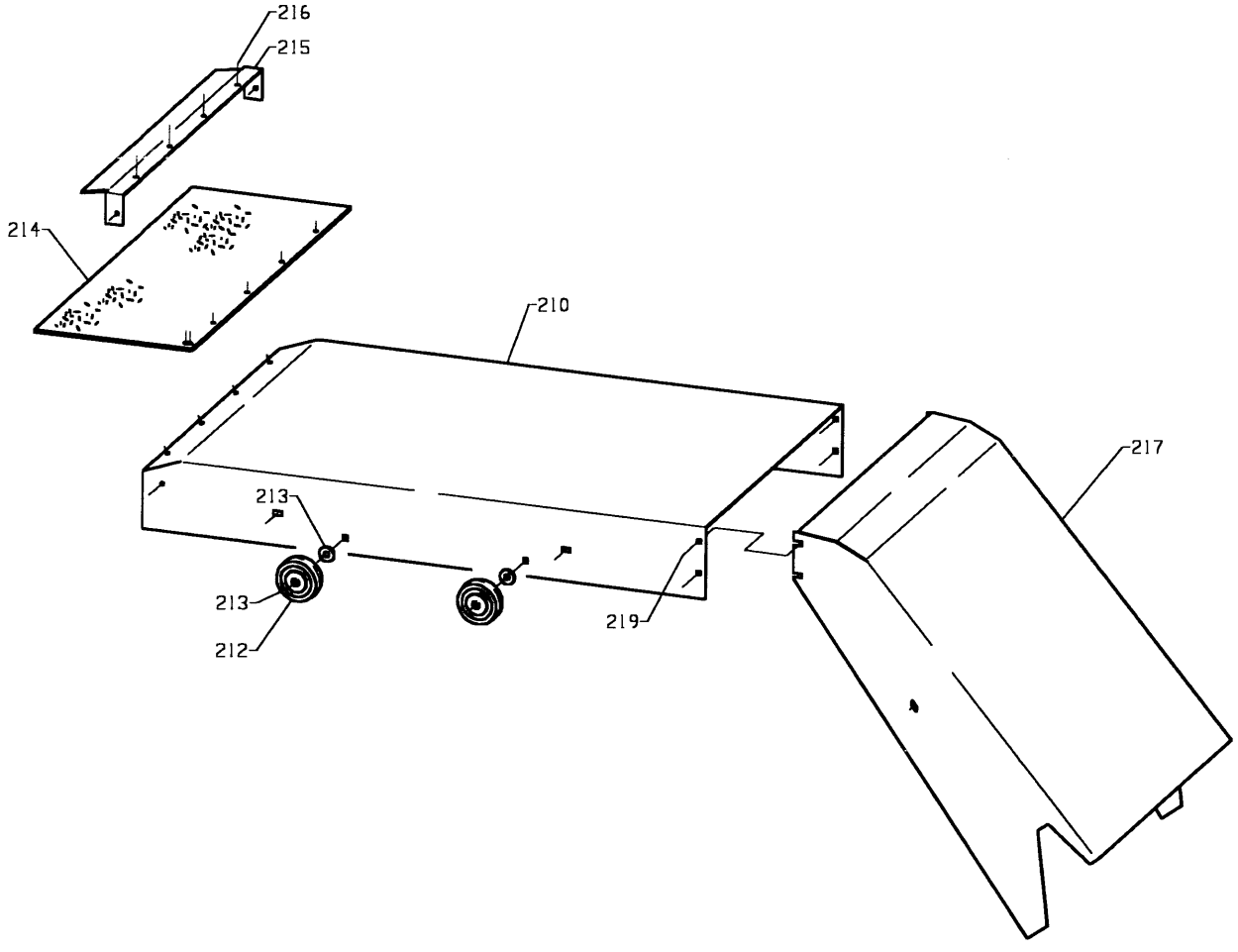

Fig. 20

Utgave: / Issue: 5	Redskap: / Implement: POTETHØSTER 2600 / POTATO HARVESTER 2600	Kverneland
Dato: / Date: 02-06	Enhet / Unit ELEVATOR 900 / ELEVATOR 900	Fig nr.: 21

Ref. No.	Delenr. Part no.	Ant. Qty.	Gjenstand	Description	Anmerkning Note
	306901		**TOPPSKJERM KOMPL.**	**UPPER GUARD ASSY**	
210	306902	1	TOPPSKJERM	UPPER GUARD	
211	821416	4	LÅSESKRUE M8X16-4.6 ELZN.	CARRIAGE BOLT M8X16-4.6 GALV	
211	860160	4	BRIKKE Ø10.5-Ø21X2 ELZN	WASHER Ø10,5-Ø21X2 GALV	
211	852158	4	NYLOCKMUTTER M8 ELZN	NYLOCK NUT M8 GALV	
212	255692	4	PLASTHJUL Ø100 M/KULEL.OG TETN.	ROLLER Ø100 W/BALL BEARING	
213	821570	4	LÅSESKRUE M10X70-4.6 ELZN	CARRIAGE BOLT M10X70-4.6 GALV	
213	228577	4	BRIKKE Ø13.5-Ø35X5	WASHER Ø13.5-Ø35X5 GALV	
213	852160	4	NYLOCKMUTTER M10 ELZN	NYLOCK NUT M10 GALV	
214	306903	1	GUMMIPLATE	RUBBER PLATE	
215	306904	1	LIST	RETAINER	
216	827220	6	SENKSKRUE M/6KT. HOL M8X20	INHEX COUNTERSUNK SCREW M8X20	
216	852158	6	NYLOCKMUTTER M8 ELZN	NYLOCK NUT N8 GALV	
217	306906	1	LEDDSKJERM	JOINT GUARD	
218	821420	6	LÅSESKRUE M8X20-4.6 ELZN	CARRIAGE BOLT M8X20-4.6 GALV	
218	860158	6	BRIKKE Ø8.4-Ø17X1.6 ELZN	WASHER Ø8.4-Ø17X1.6 GALV	
218	850158	6	NYLOCKMUTTER M8-8 ELZN	NYLOCK NUT M8-8 GALV	
219	821416	4	LÅSESKRUE M8X16-4.6 ELZN	CARRICAGE BOLT M8X16-4.6 GALV	
219	860158	4	BRIKKE Ø8.4-Ø17X1.6 ELZN	WASHER Ø8.4-Ø17X1.6 GALVN	
219	850158	4	NYLOCKMUTTER M8-8 ELZN	NYLOCK NUT M8-8 GALV	

Kverneland

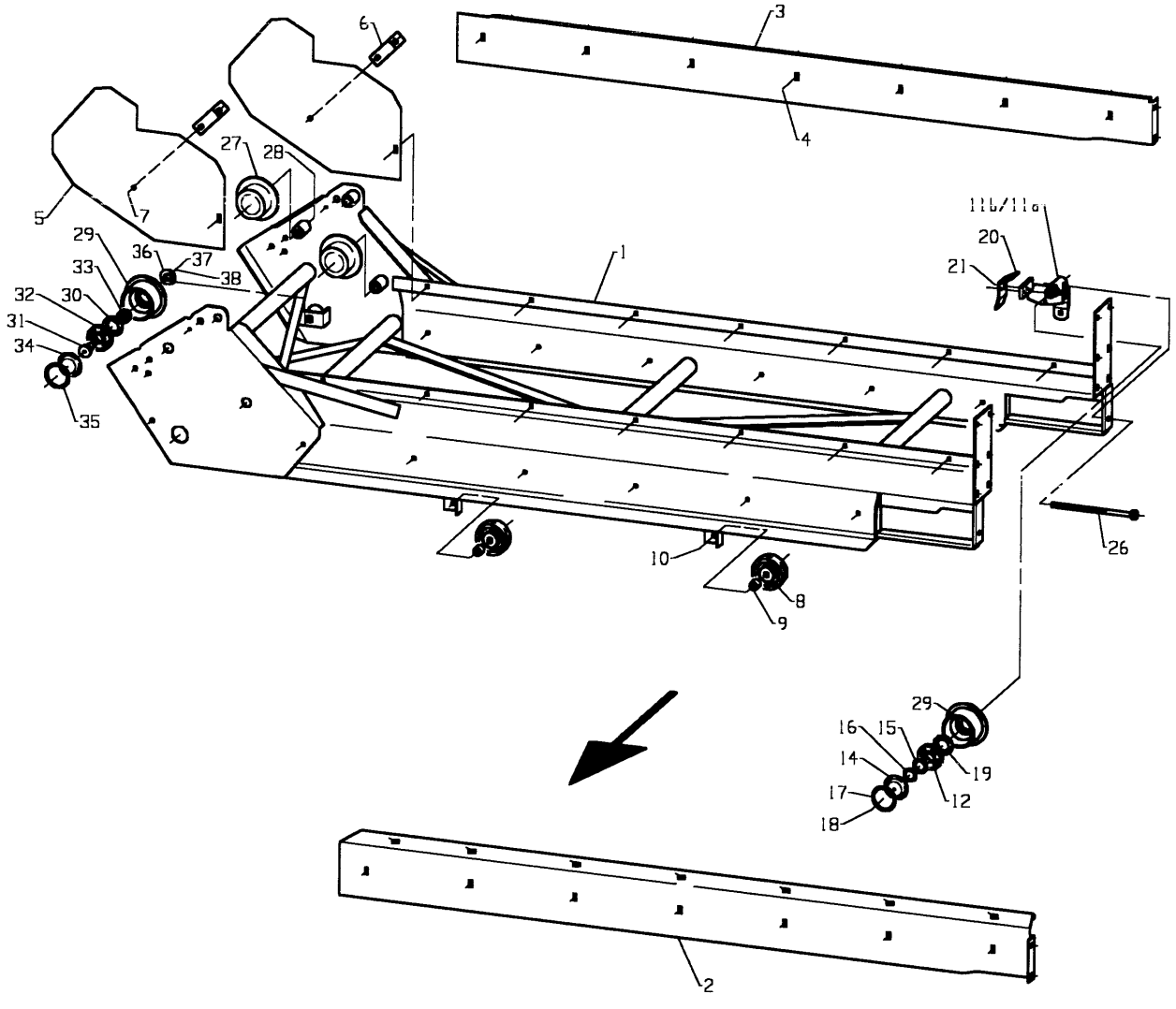

Fig. 22

Utgave: / Issue: 5	Redskap: / Implement: POTETHØSTER 2600 / POTATO HARVESTER 2600	Kverneland
Dato: / Date: 02-06	Enhet / Unit ELEVATOR 1100 / ELEVATOR 1100	Fig nr.: 22

Ref. No.	Delenr. Part no.	Ant. Qty.	Gjenstand	Description	Anmerkning Note
1	325167	1	BOTNRAMME 1100 SV.	LOWER ELEVATOR 1100 SECTION	
2	324895	1	SKJERM F.	GUARD FORWARD	
3	306832	1	SKJERM B.	GUARD REAR	
4	821416	16	LÅSESKRUE M8X16-4.6 ELZN.	CARRIAGE BOLT M8X16-4.6 GALV.	
4	860158	16	BRIKKE Ø8.4-17X1.6 ELZN	WASHER Ø8.4-Ø17X1.6	
4	850158	16	SEKSKANTMUTTER M8-8 ELZN.	HEX. NUT M8-8 GALV.	
5	306821	2	LEDDSKJERM	GUARD	
6	306822	2	VINKEL	BRACKET	
7	821420	8	LÅSESKRUE M8X20-4.6 ELZN.	CARRIAGE BOLT M8X20-4.6 GALV.	
7	860158	8	BRIKKE Ø8.4-17X1.6 ELZN	WASHER Ø8.4-Ø17X1.6	
7	850158	4	SEKSKANTMUTTER M8-8 ELZN.	HEX. NUT M8-8 GALV.	
7	852158	4	NYLOCKMUTTER M8 ELZN.	NYLOCK NUT M8 GALV.	
8	255692	16	PLASTHJUL Ø100 M/KULEL.OG TETN	ROLLER Ø100 W/BALL BEARING	
9	301155	16	HYLSE Ø10.4-Ø25X26	SPACER Ø10.4-Ø25X26	
10	813590	16	SEKSKANTSKRUE M10X90-8.8 ELZN	HEX. BOLT M10X90-8.8 GALV.	
10	860160	16	BRIKKE Ø10.5-Ø21X2 ELZN	WASHER Ø10.5-Ø21X2	
10	852160	16	NYLOCKMUTTER M10 ELZN.	NYLOCK NUT M10 GALV.	
11a-22	**301110**	**1**	**VENDERULL FRAMRE KOMPL.**	**FRONT ELEVATOR TENSION ROLLER**	
11b-22	**301111**	**1**	**VENDERULL BAKRE KOMPL.**	**REAR ELEVATOR TENSION ROLLER**	
11a	301112	1	GLIDESKO FRAMRE SV.	FRONT ROLLER BRACKET	
11b	301113	1	GLIDESKO BAKRE SV.	REAR ROLLER BRACKET	
12	870830	1	KULELAGER 6306	BALL BEARING 6306	
13	300401	1	RULL	BELT ROLLER	
14	300232	1	DEKSEL Ø71.8 M/NIPPEL	CAP Ø71.8 AND GREASE NIPPLE	
15	868606	1	STØTTERING 30X42X2.5	SUPPORT RING 30X42X2.5	
16	868430	1	LÅSERING UTV. A30X1.50	CIRCLIP A30X1.50	
17	868572	1	LÅSERING INNV. I 72X2.5	CIRCLIP I72X2.5	
18	873541	1	SMØRENIPPEL M6-45GR.	GREASE NIPPLE M6-45DEG.	
19	871356	1	TETNINGSRING 3556/10	OIL SEAL MIM 3556	
20	301117	1	AVSKRAPER	SCRAPER	
21	813320	2	SEKSKANTSKRUE M6X20-8.8 ELZN	HEX. BOLT M6X20-8.8 GALV	
21	852156	2	NYLOCKMUTTER M6 ELZN.	NYLOCK NUT M6 GALV.	
22	866455	1	SPENNHYLSE 8X55	LOCK PIN 8X55	
26	810714	2	6KT.SKR.HELGJ.M12X240-8.8ELZN	HEX. BOLT THREADEDM12X240-8.8	
26	860163	2	BRIKKE Ø13-Ø24X2.5 ELZN	WASHER Ø13-Ø24X2.5	
26	850162	2	SEKSKANTMUTTER M12-8 ELZN.	HEX. NUT M12-8 GALV.	
27	301145	4	FLENSRULL Ø90 M/GUMMI KOMPL.	RUBBERCOATED ROLLER Ø90	
28	813903	4	SEKSKANTSKRUE M16X130-8.8 ELZN	HEX. BOLT M16x130-8.8 GALV.	
29-38	**310752**	**2**	**BELTERULL KOMPL.**	**BELT ROLLER ASSY**	
29	300401	1	RULL	BELT ROLLER	
30	871356	1	TETNINGSRING 3556/10	OIL SEAL MIM 3556	
31	310753	1	AKSEL	SHAFT	
32	870830	1	KULELAGER 6306	BALL BEARING 6306	
33	310755	1	HYLSE Ø20-Ø35X20	SPACER Ø20-Ø35X20	
34	300231	1	DEKSEL Ø71.8	CAP Ø71.8	
35	868572	1	LÅSERING INNV. I 72X2.5	CIRCLIP I72X2.5	
36	300521	1	KLEMSKIVE	WASHER	
37	873545	1	SMØRENIPPEL M8X1.25 RETT	GREASE NIPPLE M8X1.25	
38	850166	1	SEKSKANTMUTTER M16-8 ELZN.	HEX. NUT M16 GALV	

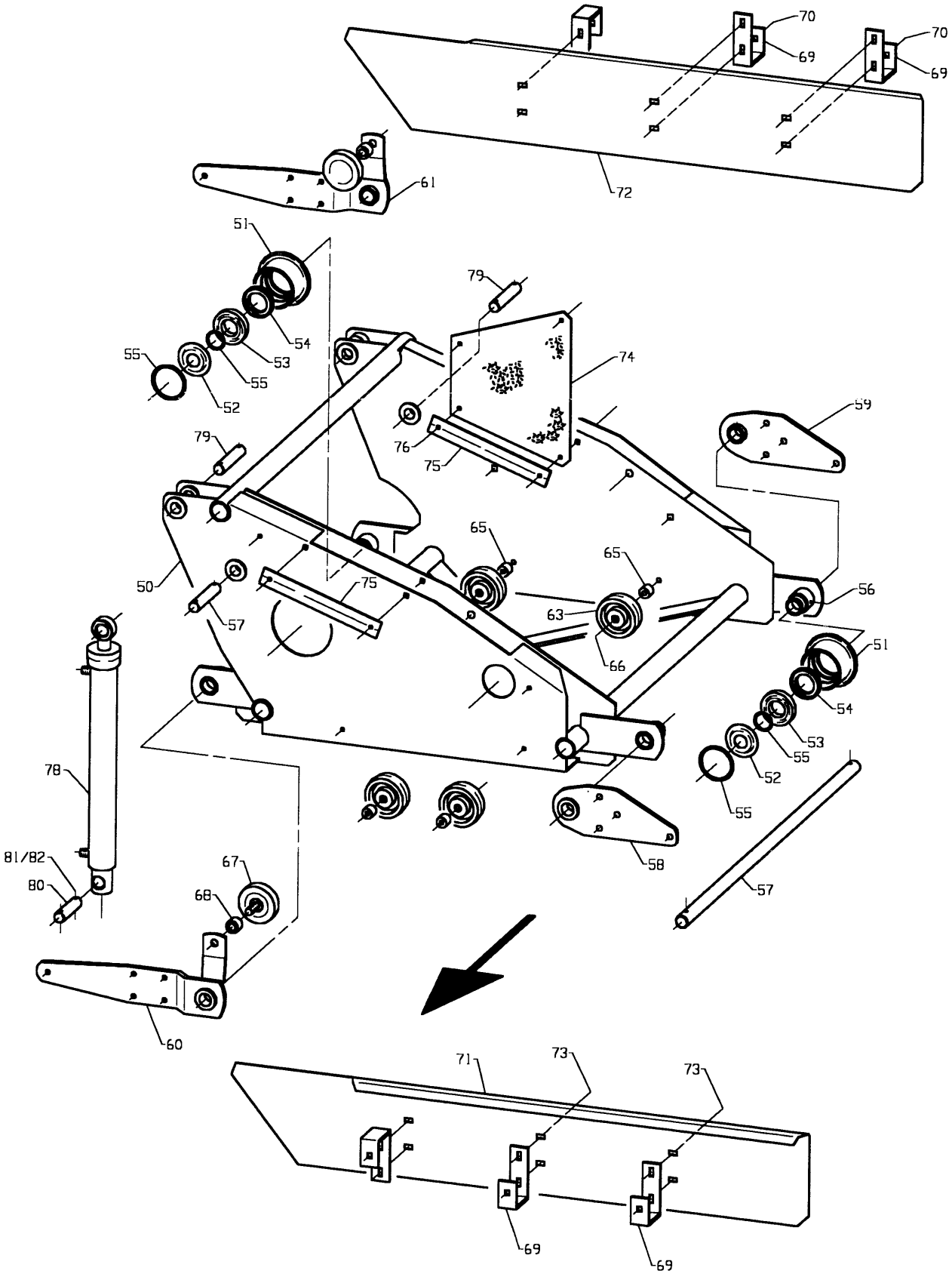
70
69
70
69
72
61
51
79
54
53
55
55
52
74
59
79
76
75
65
65
50
75
56
57
63
66
51
54
53
55
52
55
78
58
81/82
80
67
68
57
60
71
73
73
69
69

Fig. 22

Utgave: / Issue: 5	Redskap: / Implement: POTETHØSTER 2600 / POTATO HARVESTER 2600	Kverneland
Dato: / Date: 02-06	Enhet / Unit ELEVATOR 1100 / ELEVATOR 1100	Fig nr.: 22

Ref. No.	Delenr. Part no.	Ant. Qty.	Gjenstand	Description	Anmerkning Note
50	325187	1	NEDRE MIDTRAMME 1100 SV.	LOWER MIDFRAME 1100 PART ASSY	
51	300402	4	RULL	ROLLER	
52	301139	4	DEKSEL Ø79.5	COVER	
53	870740	4	KULELAGER 6208	BALL BEARING 6208	
54	871475	4	TETNINGSRING 4872/12 BASL	OIL SEAL 4872/12 BASL	
55	868580	4	LÅSERING INNV. I 80X2.5	CIRCLIP I80X2.50	
55	868440	4	LÅSERING UTV. A40X1.75	CIRCLIP A40X1.75	
56	873540	4	SMØRENIPPEL M6 RETT	GREASE NIPPLE M6	
57	325200	2	AKSEL NEDRE Ø30X1245	SHAFT Ø30X1245	
58	325202	1	YTTERLENKE 1100 FRAMRE SV.	OUTER LINK 1100 FRONT	
59	325203	1	YTTERLENKE 1100 BAKRE SV.	OUTER LINK 1100 REAR	
60	325208	1	LEDD FRAMRE SV.	LINK 1100 FRONT	
61	306873	1	LEDD BAKRE SV.	LINK 1100 REAR	
62	866450	4	SPENNHYLSE 8X50	TENSION PIN 8X50X1.5	
63	255692	4	PLASTHJUL Ø100 M/KULEL.OG TETN	ROLLER Ø100 W/BALL BEARING	
65	301155	4	HYLSE Ø10.4-Ø25X26	SPACER Ø10.4-Ø25X26	
66	813600	4	SEKSKANTSKRUE M10X100-8.8 ELZN	HEX. BOLT M10X100-8.8 GALV.	
66	860160	4	BRIKKE Ø10.5-Ø21X2 ELZN	WASHER Ø10.5-Ø21X2	
66	850160	4	SEKSKANTMUTTER M10-8 ELZN.	HEX. NUT M10-8 GALV.	
67	301144	2	STØTTERULL Ø90 M/GUMMI KOMPL.	RUBBERCOATED SUPPORT ROLLER 90	
68	301059	2	HYLSE Ø16.5-Ø30X23	SPACER Ø16.5-Ø30X25	
69	306856	6	BØYLE	BRACKET	
70	821525	4	LÅSESKRUE M10X25-4.6 ELZN.	CARRIAGE BOLT M10X25-4.6 GALV.	
70	860160	4	BRIKKE Ø10.5-Ø21X2 ELZN	WASHER Ø10.5-Ø21X2	
70	852160	4	SEKSKANTMUTTER M10-8 ELZN.	HEX. NUT M10-8 GALV.	
71	325214	1	RENNESKJERM N. MIDTRAMME FRAMRE	SIDE GUARD LOWER MIDFRAME FRONT	
72	325215	1	RENNESKJERM N. MIDTRAMME BAKRE	SIDE GUARD LOWER MIDFRAME REAR	
73	821420	8	LÅSESKRUE M8X20-4.6 ELZN.	CARRIAGE BOLT M8X20-4.6 GALV.	
73	860158	8	BRIKKE Ø8.4-17X1.6 ELZN	WASHER Ø8.4-Ø17X1.6	
73	850158	8	SEKSKANTMUTTER M8-8 ELZN.	HEX. NUT M8-8 GALV.	
74	306853	2	GUMMISKJERM	RUBBER PLATE	
75	306854	4	KLEMMLIST	RETAINER	
76	821420	8	LÅSESKRUE M8X20-4.6 ELZN.	CARRIAGE BOLT M8X20-4.6 GALV.	
76	860158	8	BRIKKE Ø8.4-17X1.6 ELZN	WASHER Ø8.4-Ø17X1.6	
76	852158	8	NYLOCKMUTTER M8 ELZN.	NYLOCK NUT M8 GALV.	
77	813630	8	SEKSKANTSKRUE M12X30-8.8 ELZN	HEX. BOLT M12X30-8.8 GALV.	
77	860163	8	BRIKKE Ø13-Ø24X2.5 ELZN	WASHER Ø13-Ø24X2.5	
77	852162	8	NYLOCKMUTTER M12 ELZN.	NYLOCK NUT M12 GALV	
78	306804	2	SYLINDER DV Ø50/28X563+370	CYLINDER DA Ø50/28X563+370	
*	300828		SYLINDERPAKNINGSSETT Ø50/Ø28	CYLINDER SEAL KIT Ø50/Ø28	
79	306882	2	BOLT Ø25-Ø8.4/114/Ø8.4	BOLT Ø25-Ø8.4/114/Ø8.4	
80	306883	2	BOLT Ø25-Ø8.4/88/Ø8.4	BOLT Ø25-Ø8.4/88/Ø8.4	
81	860175	8	BRIKKE Ø26-Ø44X4 ELZN	WASHER Ø25.3-Ø44X4	
82	865440	8	SPLINT 8X40 GALV.	SPLIT PIN 8X40 GALV.	

Kverneland

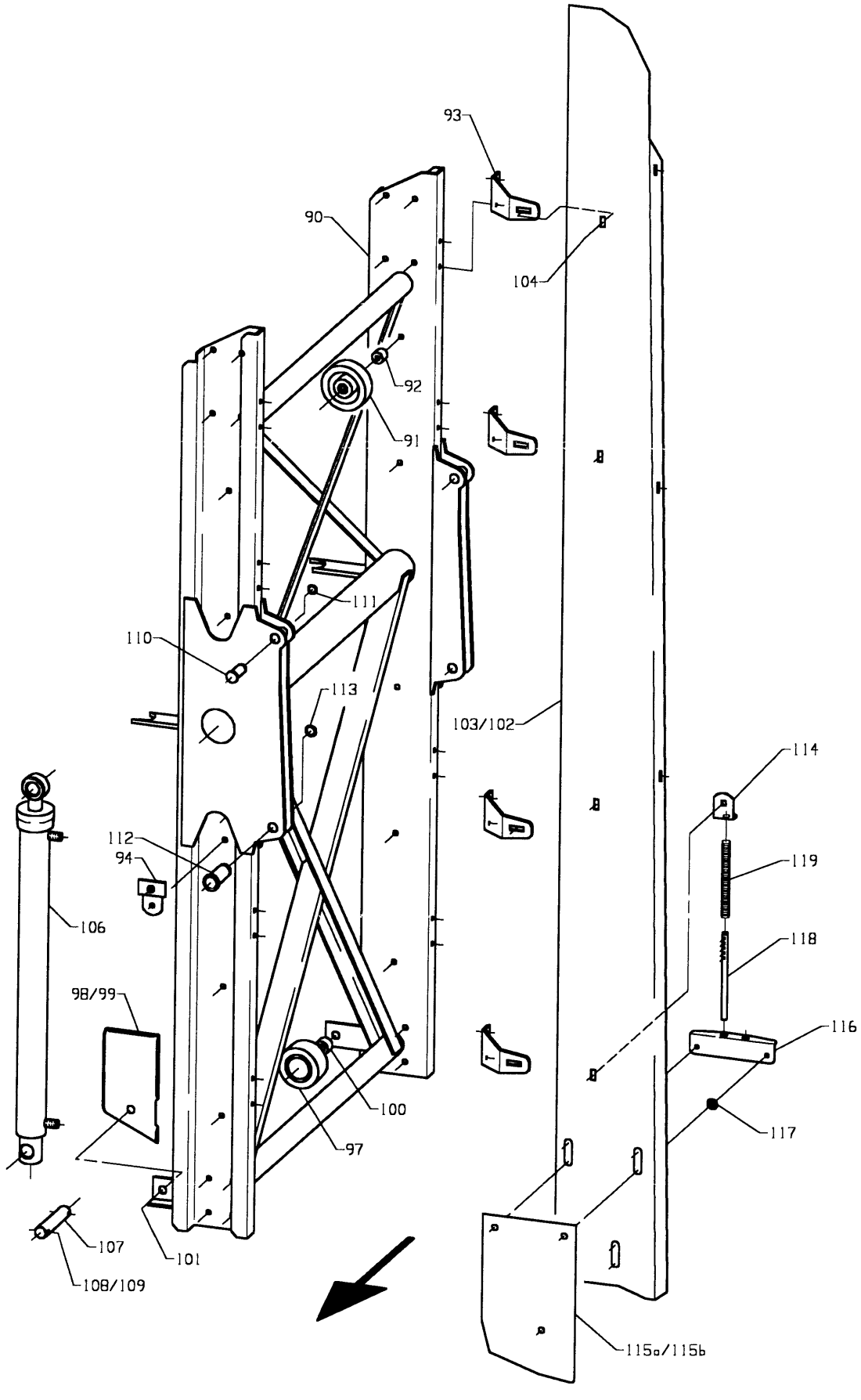

Fig. 22

Utgave: / Issue: 5	Redskap: / Implement: POTETHØSTER 2600 / POTATO HARVESTER 2600	Kverneland
Dato: / Date: 02-06	Enhet / Unit ELEVATOR 1100 / ELEVATOR 1100	Fig nr.: 22

Ref. No.	Delenr. Part no.	Ant. Qty.	Gjenstand	Description	Anmerkning Note
90	325221	1	MIDTRAMME 1100	MIDFRAME 1100	
91	255692	8	PLASTHJUL Ø100 M/KULEL.OG TETN	ROLLER Ø100 W/BALL BEARING	
92	301155	8	HYLSE Ø10.4-Ø25X26	SPACER Ø10.4-Ø25X26	
93	301222	8	SIDEPLATEHOLDER	BRACKET	
94	300858	6	SLANGEFESTE SV.	HOSE BRACKET	
95	813600	8	SEKSKANTSKRUE M10X100-8.8 ELZN	HEX. BOLT M10X100-8.8 GALV.	
96	813530	2	SEKSKANTSKRUE M10X30-8.8 ELZN	HEX. BOLT M10X30-8.8 GALV.	
97	301144	2	STØTTERULL Ø90 M/GUMMI KOMPL.	RUBBERCOATED SUPPORT ROLLER 90	
98	306834	1	TRINSEDEKSEL F.	ROLLER COVER FORWARD	
99	306835	1	TRINSEDEKSEL B.	ROLLER COVER REAR	
100	301059	2	HYLSE Ø16.5-Ø30X23	SPACER Ø16.5-Ø30X25	
101	850166	2	SEKSKANTMUTTER M16-8 ELZN.	HEX. NUT M16 GALV	
101	860816	2	FJØRSKIVE 16 ELZN	SPRING WASHER 16	
102	325238	1	SKJERM FRAMRE	SIDE GUARD MIDFRAME FRONT	
103	325239	1	SKJERM BAKRE	SIDE GUARD MIDFRAME REAR	
104	821416	6	LÅSESKRUE M8X16-4.6 ELZN.	CARRIAGE BOLT M8X16-4.6 GALV.	
104	850158	6	SEKSKANTMUTTER M8-8 ELZN.	HEX. NUT M8-8 GALV.	
104	860158	6	BRIKKE Ø8.4-17X1.6 ELZN	WASHER Ø8.4-Ø17X1.6	
105	813530	8	SEKSKANTSKRUE M10X30-8.8 ELZN	HEX. BOLT M10X30-8.8 GALV.	
105	860160	8	BRIKKE Ø10.5-Ø21X2 ELZN	WASHER Ø10.5-Ø21X2	
105	852160	8	NYLOCKMUTTER M10 ELZN.	NYLOCK NUT M10 GALV.	
106	325120	2	SYLINDER DV Ø63/Ø32X810+610	CYLINDER DA Ø63/Ø32X810+610	
*	300833		SYLINDERPAKNINGSSETT Ø63/Ø32	CYLINDER SEAL KIT Ø63/Ø32	
107	306882	2	BOLT Ø25-Ø8.4/114/Ø8.4	BOLT Ø25-Ø8.4/114/Ø8.4	
108	860175	4	BRIKKE Ø26-Ø44X4 ELZN	WASHER Ø25.3-Ø44X4	
109	865440	4	SPLINT 8X40 GALV.	SPLIT PIN 8X40 GALV.	
110	325236	2	SPORBOLT	SLOTTED BOLT	
111	868719	2	SPORRYTTER 19	CIRCLIP "E"-TYPE 19	
114	325243	2		ATTACHMENT LUG	
115a	325241	1		GUARD EXTENSION REAR	
115b	325240	1		GUARD EXTENSION FRONT	
116	325242	2		ANGELED BRACKET	
117	325254	6		BUSHING Ø9X6-Ø16/3	
118	325255	2		COIL SPRING GUIDE Ø12X180	
119	415261	2		SPRING Ø13-Ø18X152	

Kverneland

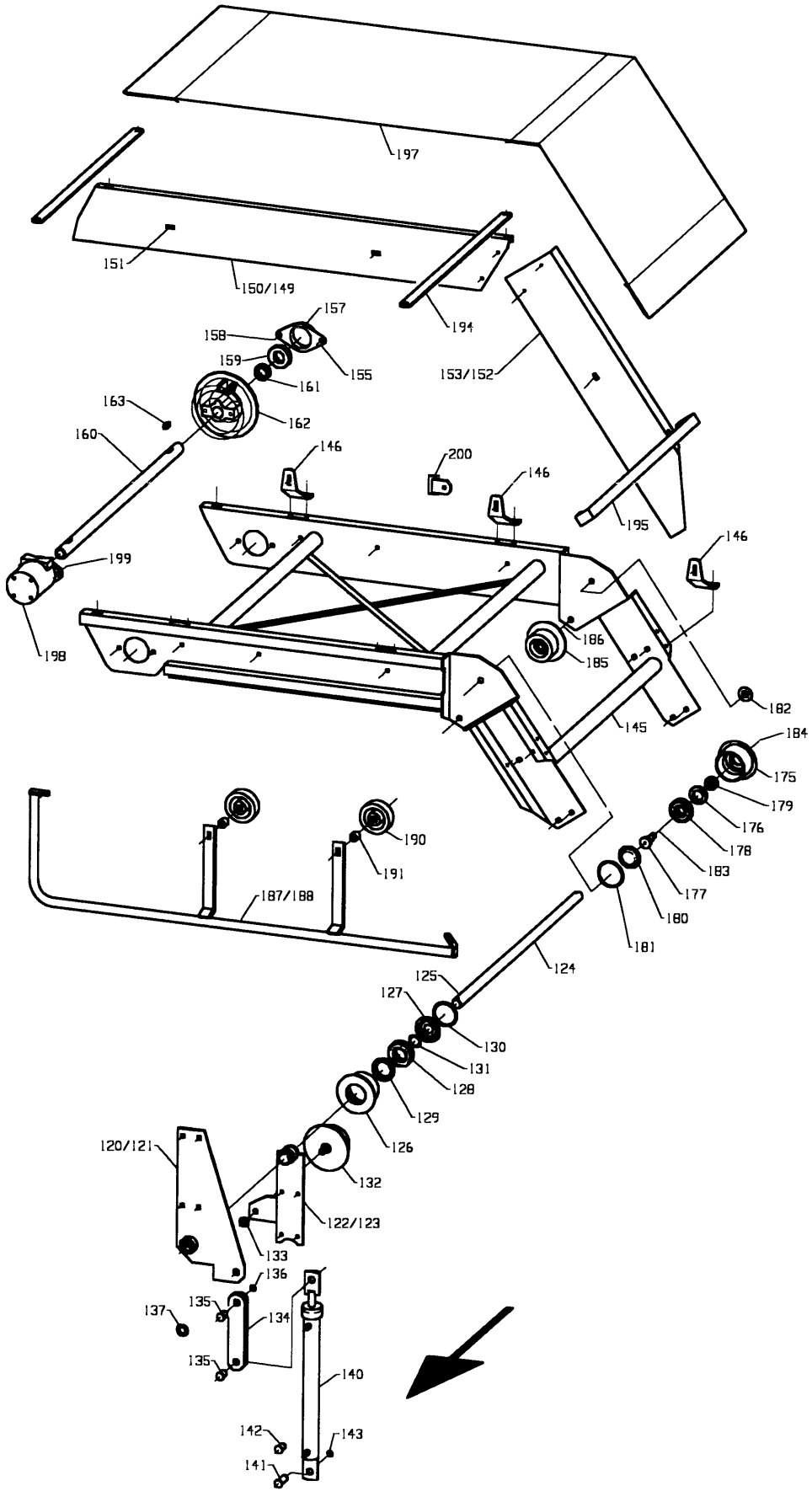

Fig. 22

Utgave: / Issue: 5	Redskap: / Implement: POTETHØSTER 2600 / POTATO HARVESTER 2600	Kverneland
Dato: / Date: 02-06	Enhet / Unit ELEVATOR 1100 / ELEVATOR 1100	Fig nr.: 22

Ref. No.	Delenr. Part no.	Ant. Qty.	Gjenstand	Description	Anmerkning Note
120-137	**325245**	**1**	**LEDDAKSEL 1100 ØVRE KOMPL.**	**LEDDAKSEL 1100 ØVRE KOMPL.**	
120	301122	1	YTTERLENKE FRAMRE SV	FRONT OUTER LINK	
121	301123	1	YTTERLENKE BAKRE SV	REAR OUTER LINK	
122	325248	1	INNERLENKE 1100 FRAMRE SV	INNER 1100 LINK FRONT	
123	325249	1	INNERLENKE 1100 BAKRE SV	INNER 1100 LINK REAR	
124	325250	1	AKSEL Ø30X1215	SHAFT Ø30X1215	
125	866450	2	SPENNHYLSE 8X50	TENSION PIN 8X50X1.5	
126	300402	2	RULL	ROLLER	
127	301139	2	DEKSEL Ø79.5	COVER	
128	870740	2	KULELAGER 6208	BALL BEARING 6208	
129	871475	2	TETNINGSRING 4872/12 BASL	OIL SEAL 4872/12 BASL	
130	868580	2	LÅSERING INNV. I 80X2.5	CIRCLIP I80X2.50	
131	868440	2	LÅSERING UTV. A40X1.75	CIRCLIP A40X1.75	
132	301142	2	FLENSRULL Ø110 M/GUMMI	RUBBERCOATED ROLLER Ø110	
133	860166	2	BRIKKE Ø17-Ø30X3 ELZN	WASHER Ø17-Ø30X3	
134	301126	2	SYLINDERLENKE SV.	CYLINDER LINK	
135	301129	2	SPORBOLT M/HODE Ø20X27	PIN Ø20X27	
136	868715	2	SPORRYTTER 15	CIRCLIP "E"-TYPE 15	
137	860170	2	BRIKKE Ø21-Ø37X3 ELZN	WASHER Ø21-Ø37X3	
138	813530	5	SEKSKANTSKRUE M10X30-8.8 ELZN	HEX. BOLT M10X30-8.8 GALV.	
138	860160	5	BRIKKE Ø10.5-Ø21X2 ELZN	WASHER Ø10.5-Ø21X2	
138	852160	5	NYLOCKMUTTER M10 ELZN.	NYLOCK NUT M10 GALV.	
139	813535	1	SEKSKANTSKRUE M10X35-8.8 ELZN	HEX. BOLT M10X35-8.8 GALV.	
139	860160	1	BRIKKE Ø10.5-Ø21X2 ELZN	WASHER Ø10.5-Ø21X2	
139	852160	1	NYLOCKMUTTER M10 ELZN.	NYLOCK NUT M10 GALV.	
140	300816	2	SYLINDER DV Ø40/Ø20X590+350	CYLINDER DA Ø40/Ø20X590+350	
*	300831		SYLINDERPAKNINGSSETT Ø40/Ø20	CYLINDER SEAL KIT Ø40/Ø20	
141	301060	2	SPORBOLT M/HODE Ø19X47	PIN Ø19X47	
142	301129	2	SPORBOLT M/HODE Ø20X27	PIN Ø20X27	
143	868715	4	SPORRYTTER 15	CIRCLIP "E"-TYPE 15	
145-200	**325260**	**1**	**TOPPRAMME 1100 KOMPL.**	**TOP FRAME 1100 ASSY**	
145	325262	1	TOPPRAMME 1100 SV.	TOP FRAME 1100	
146	301222	6	STOLPE KORT	BAR SHORT	
149	301224	1	TOPPSKJERM BAKRE	FRONT TOP GUARD	
150	301225	1	TOPPSKJERM FRAMRE	REAR TOP GUARD	
151	821416	6	LÅSESKRUE M8X16-4.6 ELZN.	CARRIAGE BOLT M8X16-4.6 GALV.	
152	301226	1	LEDDSKJERM FRAMRE	FRONT GUARD	
153	301227	1	LEDDSKJERM BAKRE	REAR GUARD	
154	821316	4	LÅSESKRUE M6X16-4.6 ELZN.	CARRIAGE BOLT M6X16-4.6 GALV.	
154	860155	4	BRIKKE Ø6.4-Ø18X1.5 ELZN	WASHER Ø6.6-Ø18X1.5	
155	411649	1	LAGERHUS Ø72	BEARING HOUSING Ø72	
157	873540	1	SMØRENIPPEL M6 RETT	GREASE NIPPLE M6	
158	813625	2	SEKSKANTSKRUE M12X25-8.8 ELZN	HEX. BOLT M12X25-8.8 GALV	
158	852162	2	NYLOCKMUTTER M12 ELZN.	NYLOCK NUT M12 GALV	
159	870736	1	KULELAGER 6207-RS	BALL BEARING 6207-RS	
160	325265	1	DRIVAKSEL Ø35X1161	DRIVE SHAFT 035X1161	
161	301229	1	HYLSE Ø35.5-Ø48X18	SPACER Ø35.5-Ø48X18	
162	325103	2	BELTEDREV P50-12T	BELT DRIVE ROLLER P50-12T	
163	301232	2	KILE 10X8X30	KEY	
164	813545	4	SEKSKANTSKRUE M10X45-8.8 ELZN	HEX. BOLT M10X45 8.8	
175-184	**310752**	**2**	**BELTERULL KOMPL.**	**BELT ROLLER ASSY**	
175	300401	1	RULL	BELT ROLLER	
176	871356	1	TETNINGSRING 3556/10	OIL SEAL MIM 3556	
177	310753	1	AKSEL	SHAFT	
178	870830	1	KULELAGER 6306	BALL BEARING 6306	
179	310755	1	HYLSE Ø20-Ø35X20	SPACER Ø20-Ø35X20	
180	300231	1	DEKSEL Ø71.8	CAP Ø71.8	
181	868572	1	LÅSERING INNV. I 72X2.5	CIRCLIP I72X2.5	
182	300521	1	KLEMSKIVE	WASHER	
183	873545	1	SMØRENIPPEL M8X1.25 RETT	GREASE NIPPLE M8X1.25	