Kverneland

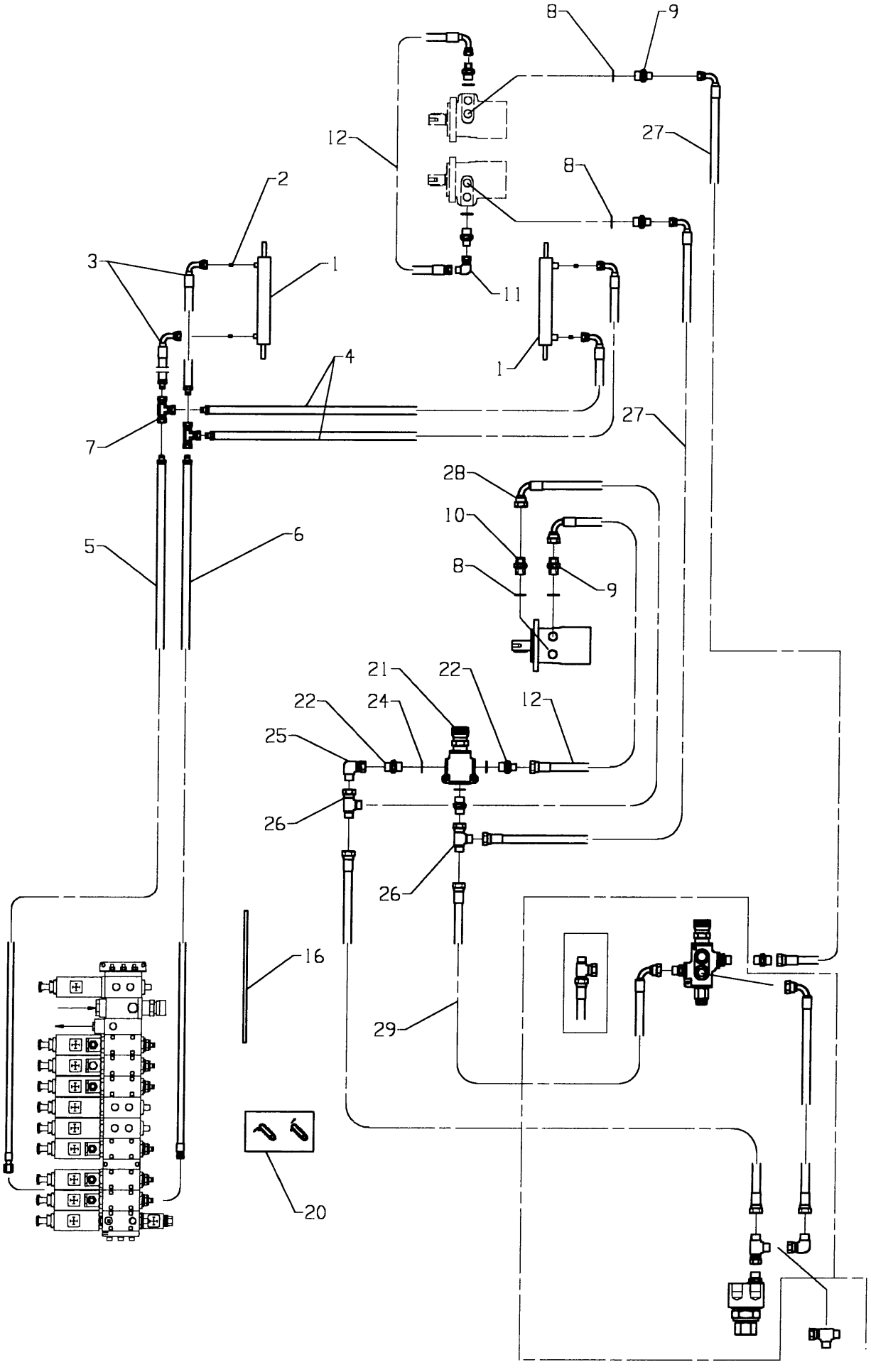

Fig. 47

Utgave: / Issue: 5	Redskap: / Implement: POTETHØSTER 2600 / POTATO HARVESTER 2600	Kverneland
Dato: / Date: 02-06	Enhet / Unit: HYDRAULIKK 3.BELTE 2627 - 2637 / HYDR. 3.WEB 2627 - 2637	Fig nr.: 47

Ref. No.	Delenr. Part no.	Ant. Qty.	Gjenstand	Description	Anmerkning Note
1	310089	2		CYLINDER DA Ø40/Ø25X300+180	
2	300953	4		RESTRICTOR M8 Ø1,0MM	
3	304308	2		HYDR. HOSE 1/4" 1050	
4	304305	2		HYDR. HOSE 1/4" 2820	
5	325095	1		HYDR. HOSE 1/4" 6650	
6	325096	1		HYDR. HOSE 1/4" 6500	
7	300974	2		T-JUNCTION R1/4"	
8	219669	6		SEAL 1/2" PP 45-D	
9	410747	5		MALE ADAPTOR 3/8"-1/2"	
10	300971	1		HEXAGON NIPPLE 1/2"-1/2" BSP	
11	316167	1		BEND 90 DEG. 3/8" IN./OUT	
12	307742	2		HYDR. HOSE 3/8" 700 IO6IO6-90D	
16	319979	3		BOLT M8X330-8.8	
20	220477	1		STICKER HAULM ELEVATOR	
21	306510	1		FLOW DEVIDER	
22	307817	3		ADAPTOR 1/2"-M22X1,5 BSP/MM EE	
23	307818	1		ADAPTOR 3/8" M22X1,5	
24	307814	3		BOND SEAL M22	
25	430828	1		BSP 90 DEG.O.-IN.3/8 ADJUSTABLE	
26	411406	2		T-CONNECTION	
27	325097	2		HYDR. HOSE 3/8" 1800	
28	332668	1		HYDR. HOSE 1/2" 840	
29	332662	1		HYDR. HOSE 1/2" 560	

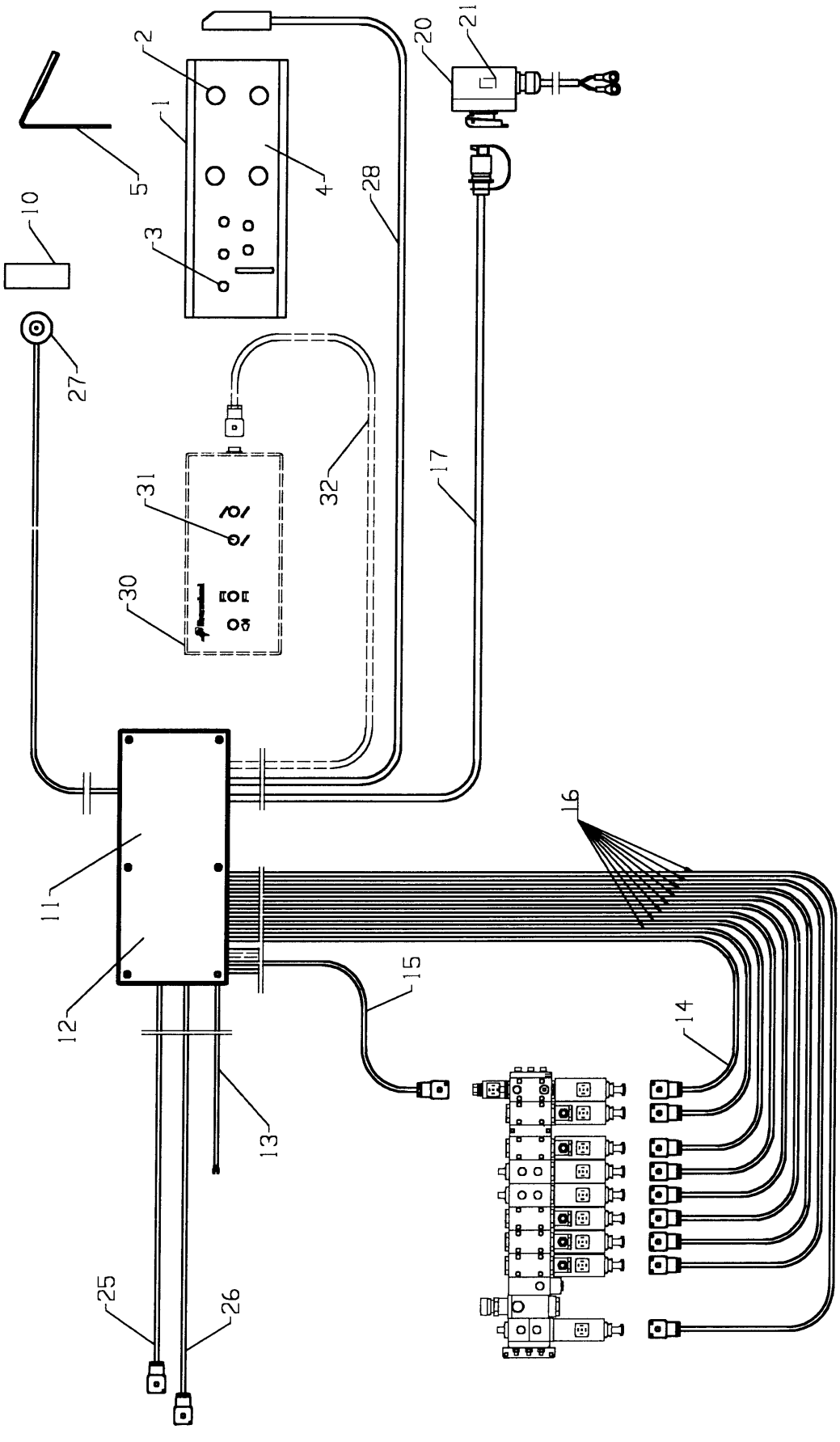

Fig. 48

Utgave: / Issue: 5	Redskap: / Implement: POTETHØSTER 2600 / POTATO HARVESTER 2600	Kverneland
Dato: / Date: 02-06	Enhet / Unit: ELEKTRISK STYRING / ELECTRIC CONTROL	Fig nr.: 48

Ref. No.	Delenr. Part no.	Ant. Qty.	Gjenstand	Description	Anmerkning Note
1	322880	1	STYREB.TRAK.ELEKTRIS KPL 2600	CONTROLLER ELECTRICAL	
2	309532	4	JOYSTICK OTEHALL	JOYSTICK OTEHALL	
3	441252	5	VIPPEBRYTER	TOGGLE-SWITCH	
4	322887	1	FILM STYREB.TRAK ELEKTRI. 2600		
5	413006	1	HOLDER STYREBOKS	BRACKET CONTROLBOX	
10	322883	1	KABEL STYREPANEL ELEKTRISK	ELECTRIC CONTROL PANEL CABLE	
11	322876	1	RELEKORT	RELAY CARD	
12	322877	24	RELE	RELAY	
13	322862	1	KABEL HORN KPL.	ALARM CABLE ASSY	
14	322270	1	DIN-CONNECTOR ENKEL (1,3)	DIN-CONNECTOR SINGLE (1,3)	
15	322297	1	DIN-CONNECTOR ENKEL (1,2)	SINGLE DIN CONNECTOR (1,2)	
16	322271	8	DIN-CONNECTOR DOBBEL	DOUBLE DIN CONNECTOR	
17	322820	1	KABEL STRØMFORSYN. 8M KPL	POWER SUPPLY CABLE 8M ASSY	
20	322821	1	BATTERIKABEL M/KOPLBOKS KPL	BATTERY CABLE W/CONN.BOX ASSY	
21	440493	1	SIKRING T. 15A	FUSE T. 15A	
25	322293	1	DIN-CONNECTOR ENKEL M/LYS 9.0M	DATA CABLE 9M ASSY.	
26	322281	1	KOPLING AKSIALPRESSOSTAT 9M	PRESSURE CONTROLLER CONN.	
27	322282	1	POSISJONERINGSSENSOR	POSITIONING SENSOR	
28	322283	1	POSISJONERINGSMAGNET	POSITION CONTROL MAGNET	
30	322890	1	STYREB.SORTB.ELEKTRISK 2600	CONTROL PANEL PICKING TABLE	
31	440474	2	VIPPEBRYTER	SWITCH FOR DRAWBAR	
32	332982	1	KABEL SORTERBORD ELEKTRISK	CABLE ELECTR. PCK TABLE PANEL	

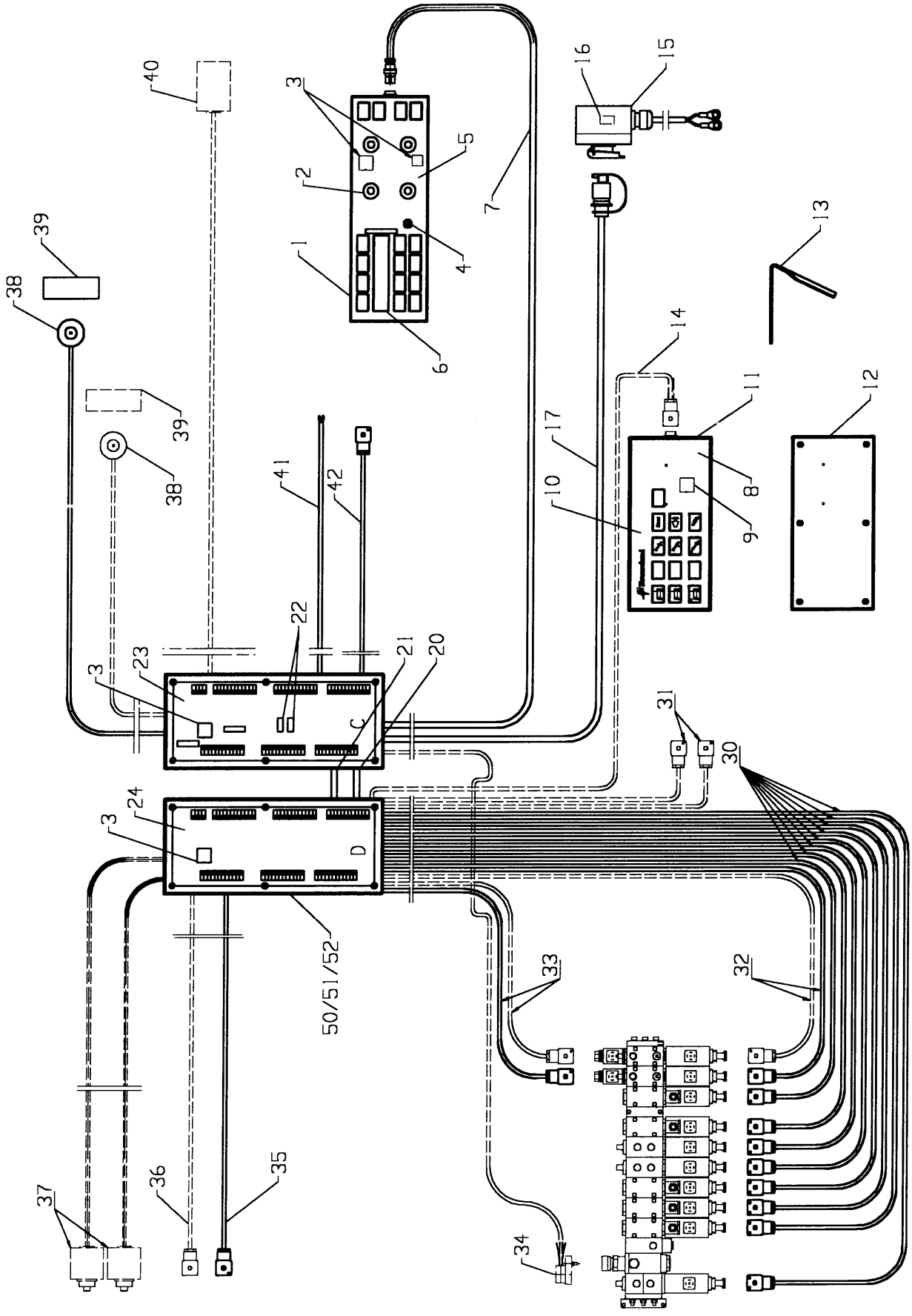
40
3
5
2
1
4
6
7
16
15
39
38
13
14
39
38
41
42
17
11
12
10
8
9
22
3
23
21
20
C
31
30
24
3
D
50/51/52
33
32
37
36
35
34

Fig. 49

Utgave: / Issue:	5	Redskap: / Implement:	POTETHØSTER 2600 POTATO HARVESTER 2600	Kverneland
Dato: / Date:	02-06	Enhet / Unit	ELEKTRONISK STYRING ELECTRONIC CONTROL	Fig nr.: 49

Ref. No.	Delenr. Part no.	Ant. Qty.	Gjenstand	Description	Anmerkning Note
1	322858	1	STYRBOKS ELEKTRONISK KPL.99	PROGRAM.PANEL ASSY 99	
2	309532	1	JOYSTICK OTEHALL	JOYSTICK	
3	335071	1	BRIKKESETT (A,C,D,TEKST)-99	CHIP KIT (A,C,D,TEKST)-99	VER: 2.46
4	441252	1	VIPPEBRYTER	TOGGLE SWITCH	
5	322842	1	FILM	FILM	
6	335057	1	KORT STYREBOKS TRAKTOR	CARD CONTROLPANEL TRACTOR	
7	322852	1	DATAKABEL 8M KPL.	DATACABLE 8M ASSY	
8-13	**322865**		**STYREB.SORTB.ELEKTRON. 2600**	**CONTROLLER P.TABLE ELECTRONIC**	
8	322288	1	KORT SORTERBORDPANEL	CARD PANEL PICKING TABLE	
9	322868	1	PROGRAMBRIKKE SORTERBORD 97	PROGRAM CHIP PICKINGTABLE 97	
10	322867	1	FILM ELEKTRONISK SORTERB.PANEL	SHEETING ELECTRONIC TABLE PANEL	
11	413004	1	STYREBOKS TOPP	OPERATOR BOX UPPER PART	
12	413005	1	STYREBOKS BUNN	OPERATOR BOX BOTTOM PART	
13	413006	1	HOLDER STYREBOKS	BRACKET CONTROLBOX	
14	322891	1	KABEL SORTERBORD	CABLE PICKING TABLE	
15	322814	1	BATTERIKABEL M/KOPL.BOKS KPL.	BATTERY CABLE W/CONN.BOX ASSY	
16	440493	1	SIKRING T. 15A	FUSE T.15A	
17	322815	1	STRØMFORSYN. KABEL 8M KPL	CABLE POWERSUPPLY 8M ASSY	
21	335067	1	POWERKABEL C-D	POWERCABLE C-D	
22	322278	2	DATABRIKKE HASTIGHET	DATACHIP SPEED	
23	322285	1	DRIVERKORT C	DRIVERCARD C	
24	322286	1	DRIVERKORT D	DRIVERCARD D	
30	322271	8	DIN-CONNECTOR DOBBEL	DIN-CONNECTOR DOUBLE	
31	322292	2	DIN-CONNECTOR HYDR.HJUL.DRIFT	DIN-PLUG HYDR.WHEEL DRIVE	
32	322270	2	DIN-CONNECTOR ENKEL	DIN-CONNECTOR SINGLE	
33	322297	2	DIN-CONNECTOR ENKEL (1.2)	DIN-CONNECTOR SINGLE (1.2)	
34	309542	1	STEPMOTOR M.GEAR	STEPMOTOR W/GEAR	
35	322281	1	KOPLING AKSIALPRESSOSTAT 9M	PRESSURE CONTROLLER CONN.	
36	322289	1	KOPLING HJULDRIFT PRESSOSTAT	CONNECTOR WHEELDRIVE PRESSOSTAT	
37	322269	2	BRYTER M/LEDNING	SWITCH W/CABLE	
38	322282	2	POSISJONSSENSOR	SENSOR TURN	
39	322283	2	POSISJONERINGSMAGNET	MAGNET TURN	
40	322284	1	NIVELLERINGSSENSOR XY	SENSOR NIV. & AXIALROLLERTABLE	
41	322862	1	KABEL HORN KPL.	CABLE HORN ASSY	
42	322293	1	DIN-CONNECTOR ENKEL M/LYS 9M	DATACABLE 9M ASSY	
50-52	**335020**	**1**	**DRIVERBOKS KOMPL. UTEN BOKS**	**DRIVERBOX ASSY**	
50	335021	1	DRIVERBOKS TOPP	DRIVERBOX TOP	
51	335022	1	DRIVERBOKS BUNN UTEN NIPLER	DRIVERBOX BOTTOM	
52	335023	1	O-RING	O-RING	

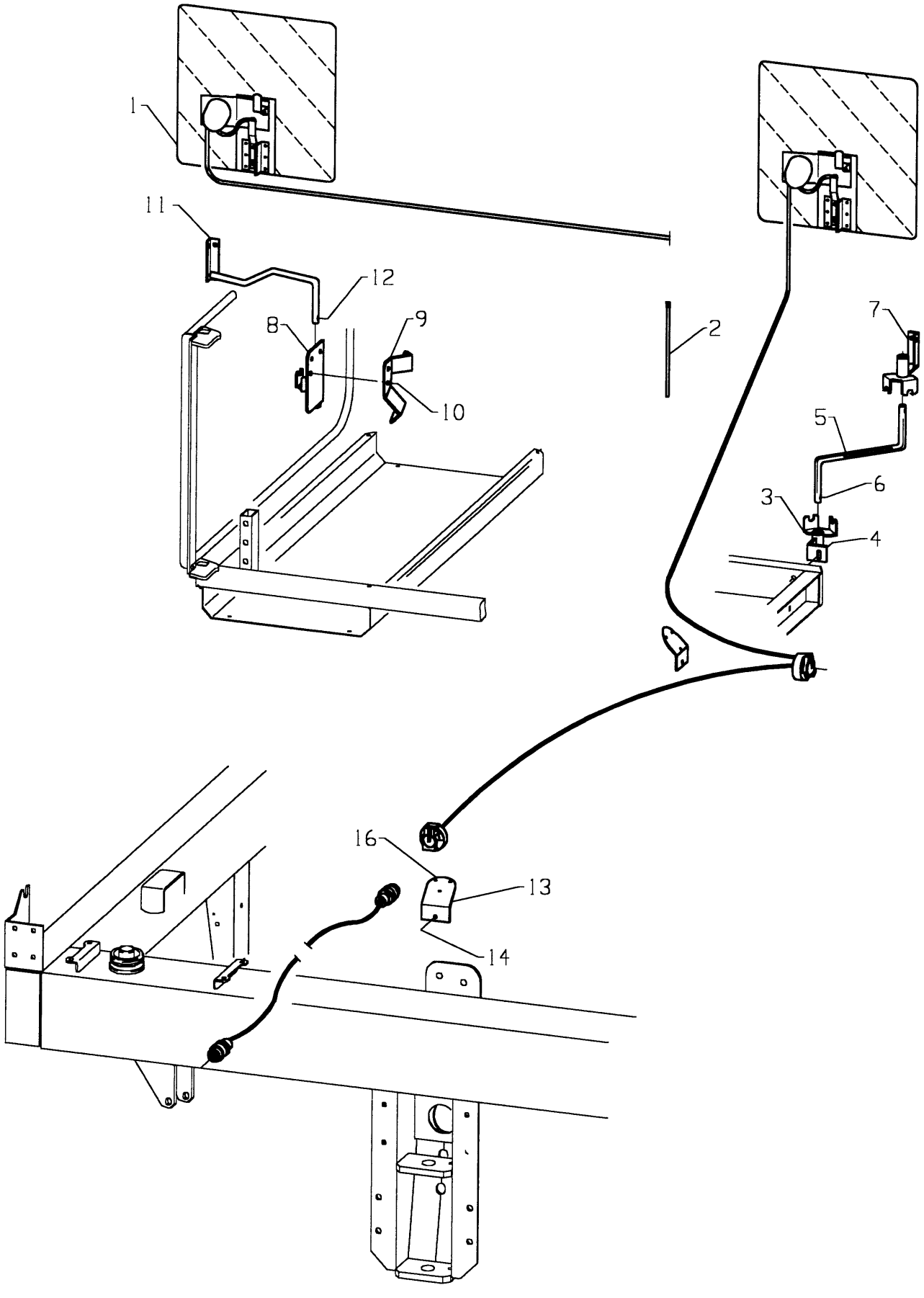

Fig. 50

Utgave: / Issue: 5	Redskap: / Implement: POTETHØSTER 2600 / POTATO HARVESTER 2600	Kverneland
Dato: / Date: 02-06	Enhet / Unit: LYSUTSTYR / ROAD LIGHTS	Fig nr.: 50

Ref. No.	Delenr. Part no.	Ant. Qty.	Gjenstand	Description	Anmerkning Note
1	302375	1	BAKLYS M/LEDNINGER	REAR LIGHT W/WIRES	
2	257772	7	BUNTEBAND 7X250	STRAP 7X250	
3	302379	1	FESTE V. SV.	LEFT BRACKET	
4	813530	1	SEKSKANTSKRUE M10X30-8.8 ELZN	HEX. BOLT M10X30-8.8 GALV.	
4	860160	1	BRIKKE Ø10.5-Ø21X2 ELZN	WASHER Ø10.5-Ø21X2	
4	852160	1	NYLOCKMUTTER M10 ELZN.	NYLOCK NUT M10 GALV.	
5	302384	1	ARM	ARM	
6	867056	2	RINGPINNE Ø6 ELZN	RING PIN 6 GALV	
7	302387	1	LYKTFESTE V. SV.	LEFT LIGHT BRACKET	
8	302380	1	FESTE H. SV.	RIGHT BRACKET	
9	302391	1	KLAMMER	BRACKET	
10	813525	2	SEKSKANTSKRUE M10X25-8.8 ELZN	HEX. BOLT M10X25-8.8 GALV.	
10	860160	2	BRIKKE Ø10.5-Ø21X2 ELZN	WASHER Ø10.5-Ø21X2	
10	852160	2	NYLOCKMUTTER M10 ELZN.	NYLOCK NUT M10 GALV.	
11	302392	1	ARM SV.	ARM	
12	867056	1	RINGPINNE Ø6 ELZN	RING PIN 6 GALV	
13	302393	2	KONTAKTFESTE	KONTAKTFESTE	
14	813425	2	SEKSKANTSKRUE M8X25-8.8 ELZN	HEX. BOLT M8X25-8.8 GALV.	
14	860158	2	BRIKKE Ø8.4-17X1.6 ELZN	WASHER Ø8.4-Ø17X1.6	
14	852158	2	NYLOCKMUTTER M8 ELZN.	NYLOCK NUT M8 GALV.	
15	813540	2	SEKSKANTSKRUE M10X40-8.8 ELZN	HEX. BOLT M10X40-8.8 GALV.	
15	270448	2	BRIKKE Ø11-Ø30X4 GALV	WASHER Ø11-Ø30X4	
15	852160	2	NYLOCKMUTTER M10 ELZN.	NYLOCK NUT M10 GALV.	
16	837285	6	PANSKRUE M/SPOR M5X35 ELZN.	SLOTTED PIN HEAD BOLT M5X35	
16	860155	6	BRIKKE Ø6.4-Ø18X1.5 ELZN	WASHER Ø6.6-Ø18X1.5	

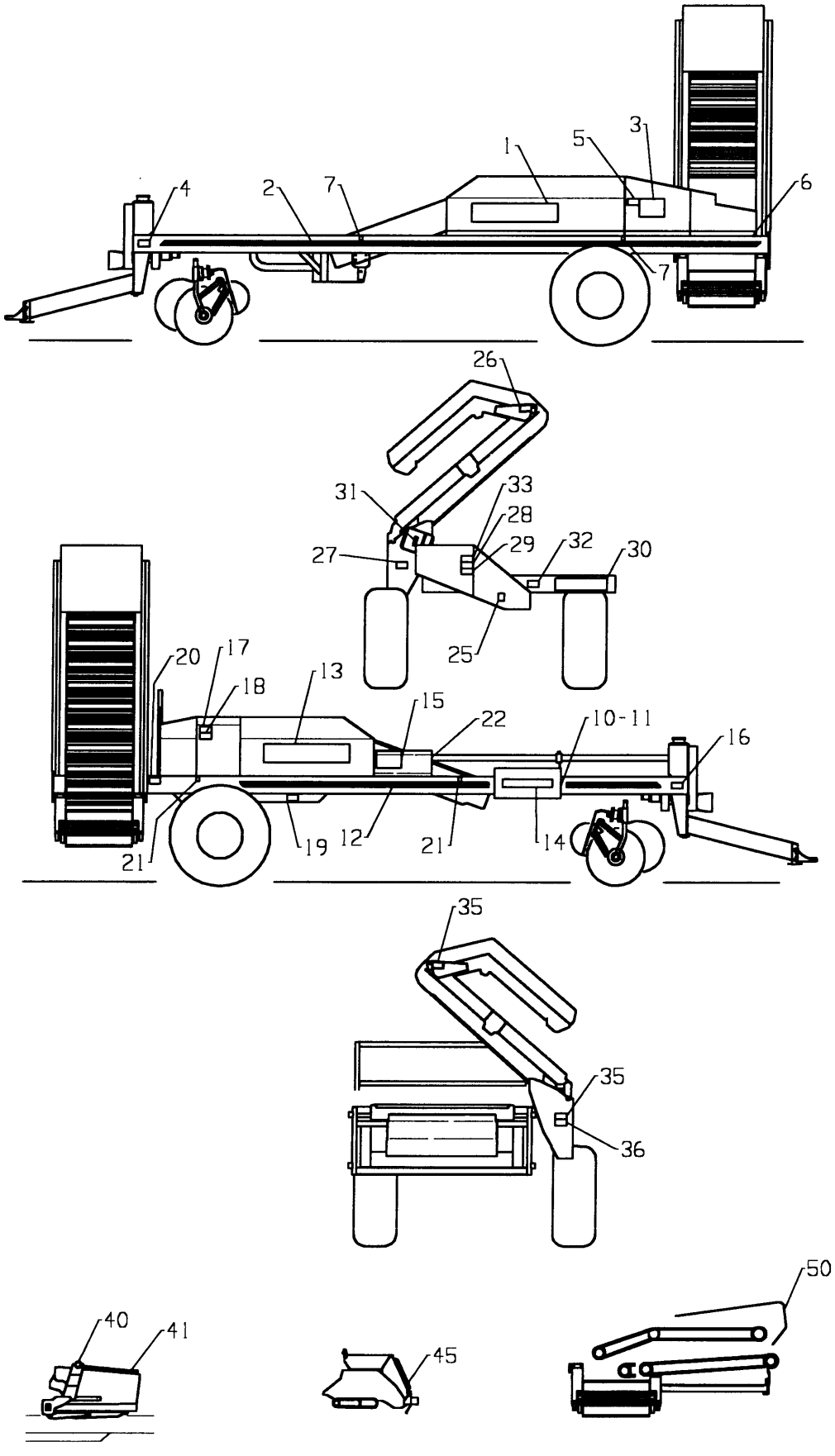
1
2
3
4
5
6
7
7
26
31
33
28
29
32
30
27
25
20
17
18
13
15
22
10-11
16
21
19
12
21
14
35
35
36
40
41
45
50

Fig. 51

Utgave: / Issue: 5	Redskap: / Implement: POTETHØSTER 2600 / POTATO HARVESTER 2600	Kverneland
Dato: / Date: 02-06	Enhet / Unit: SKILT / STICKERS	Fig nr.: 51

Ref. No.	Delenr. Part no.	Ant. Qty.	Gjenstand	Description	Anmerkning Note
1-7	**321040**		**SKILT V. SIDE SAMLENR.**	**STICKERS LH ASSY**	
1	220623	1	SKILT UNDERHAUG 800	STICKER UNDERHAUG 800	
2	931887	7	DEKORSTRIPE 47MM KV.GRØNN	DECOR STRIPE 47MM GREEN	
3	220598	1	SKILT SMØREKART VENSTRE SIDE	STICKER GREASING RATE L. SIDE	
4	220542	1	SKILT KLEMFARE FOT RULLESKJÆR	STICKER CHRUSHING,FOOT F.ROLL.	
5	220526	1	SKILT KJEDEKUTT HÅND	STICKER HAND INCICION	
6	220448	2	SKILT SYMBOL REG.PIL OLJEDELER	STICKER SYNBOL REG.ARROW OIL	
7	220307	2	SKILT HEISFESTE 34X54	STICKER LIFTING POINT - 34X54	
12-21	**321041**		**SKILT H. SIDE SAMLENR.**	**STICKERS RH ASSY**	
12	931887	4	DEKORSTRIPE 47MM KV.GRØNN	DECOR STRIPE 47MM GREEN	
13	220623	1	SKILT UNDERHAUG 800	STICKER UNDERHAUG 800	
14	220630	1	SKILT HYD. FUNKSJ. 90X578	STICKER HYDR. FUNCT.90X578	
15	220599	1	SKILT SMØREKART HØYRE SIDE	STICKER GREASING RATE RH	
16	220542	1	SKILT KLEMFARE FOT RULLESKJÆR	STICKER CHRUSHING,FOOT F.ROLL.	
17	220522	1	SKILT KLEMFARE HENGSLEDE DELER	STICKER CRUSHING HINGED PARTS	
18	220526	1	SKILT KJEDEKUTT HÅND	STICKER HAND INCICION	
19	220538	1	SKILT KLEMFARE HENDER/FØTTER	STICKER CRUSHING HAND/FOOT	
20	220544	1	SKILT KLEMFARE KROPP HORISONT.	STICKER CRUSHING BODY	
21	220307	2	SKILT HEISFESTE 34X54	STICKER LIFTING POINT - 34X54	
22	220346	1	SKILT SKAKEINDIKATOR-SKALA	STICKER AGITATING SCALE	
25-32	**321042**		**SKILT FORAN SAMLENR.**	**STICKERS FRONT ASSY**	
25	220479	1	SKILT OMDR. KRAFTOVERF.AKSEL	STICKER PTO SHAFT	
26	220522	1	SKILT KLEMFARE HENGSLEDE DELER	STICKER CRUSHING HINGED PARTS	
27	220536	1	SKILT KLEMFARE HÅND	STICKER HAND CHRUSHING	
28	220534	1	SKILT SVEISEVARSEL	STICKER WELDING WARNING	
29	220541	1	SKILT HØYSPENT-ELEVATOR	STICKER HIGH-VOLTAGE, ELEVATOR	
30	220556	1	SKILT KVERNELAND UN 2600(600)	STICKER KVERNELAND UN2600	
31	220443	1	SKILT VENDEKRAN ELEVATOR	STICKER CONTROL VALVE	
32	220546	1	SKILT KOBLE FRA FØR TRANSPORT	STICKER TRANSPORT	
33	220532	1	SKILT INSTRUKSJONSBOK	STICKER INSTRUCTION BOOK	
35-36	**321043**		**SKILT BAK SAMLENR.**	**STICKERS REAR ASSY**	
35	220522	2	SKILT KLEMFARE HENGSLEDE DELER	STICKER CRUSHING HINGED PARTS	
36	220536	1	SKILT KLEMFARE HÅND	STICKER HAND CHRUSHING	
			AKSIALRENSERULLER	**AXIAL CLEANINGS ROLLERS**	
40	220539	2	SKILT FINGERKNEKK SORTERBELTE	STICKER FINGER CRACK SORT.BELT	
41	220543	2	SKILT KLEMFARE AKSIALRULLER	STICKER DANGER AXIAL ROLLERS	
			ELEVATORFORDELER	**DISTRIBUTOR**	
45	220543	2	SKILT KLEMFARE AKSIALRULLER	STICKER DANGER AXIAL ROLLERS	
			SORTERBORD	**PICKINGTABLE**	
50	220539	2	SKILT FINGERKNEKK SORTERBELTE	STICKER FINGER CRACK SORT.BELT	

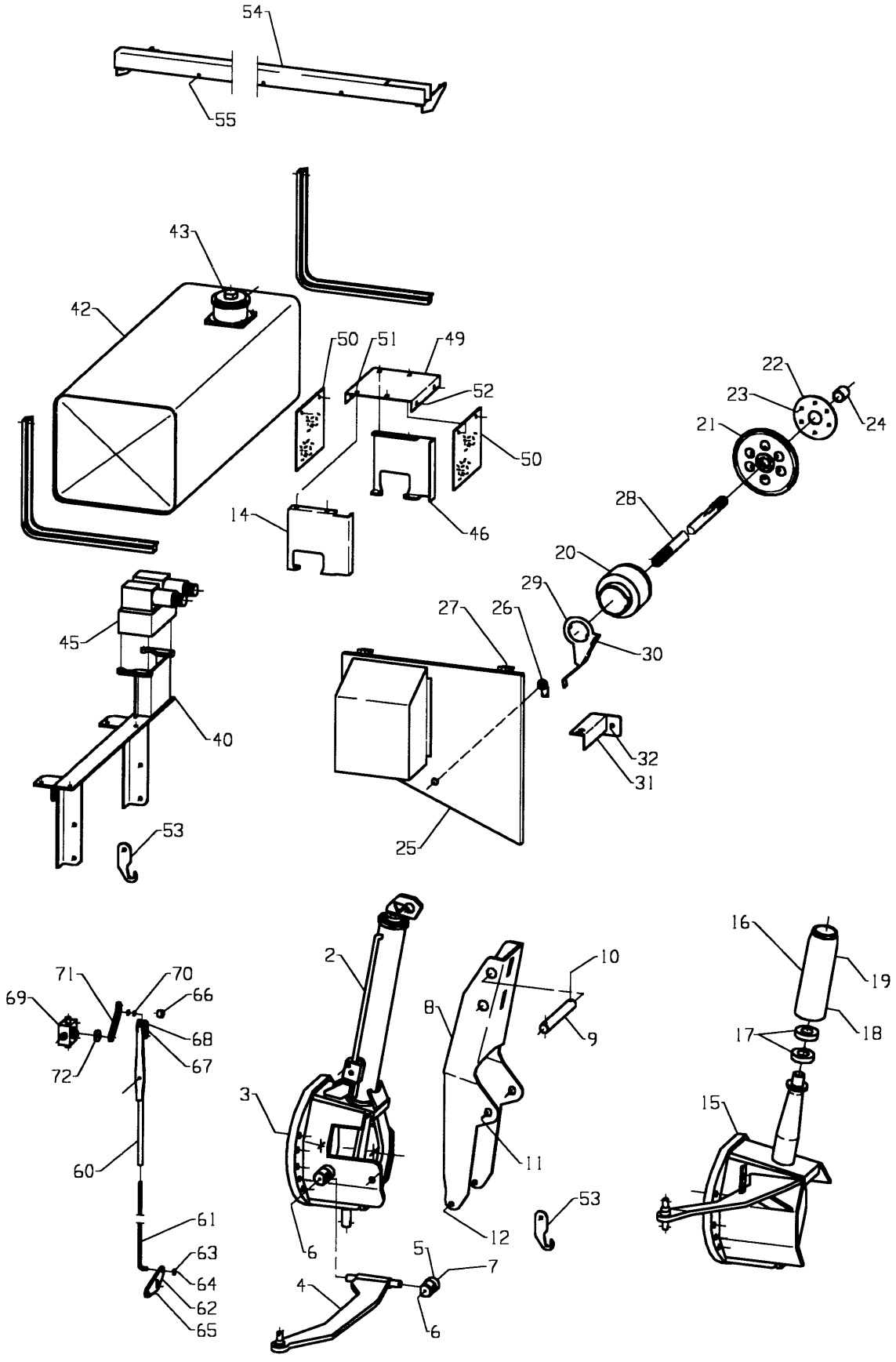
54
55
43
42
50
51
49
52
50
14
46
22
23
24
21
28
20
29
27
26
30
45
40
32
31
53
25
71
70
66
69
68
67
72
60
61
63
64
62
65
2
3
6
5
7
4
6
8
10
9
11
12
53
16
19
17
18
15

Fig. 52

Utgave: / Issue: 5	Redskap: / Implement: POTETHØSTER 2600 / POTATO HARVESTER 2600	Kverneland
Dato: / Date: 02-06	Enhet / Unit: HJULDRIFT / WHEEL DRIVE	52

Ref. No.	Delenr. Part no.	Ant. Qty.	Gjenstand	Description	Anmerkning Note
2	324774	1	HJULBRAKETT H. M/SYLINDER	WHEEL BRACKET RH W/CYLINDER	
3	814060	10	SEKSKANTSKRUE M20X60-8.8 ELZN	HEX. BOLT M20X60-8.8 GALV	
4	324783	1	SVINGARM H. SV.	STEERING ARM RH	
5	321187	2	MUTTER	NUT	
6	873540	2	SMØRENIPPEL M6 RETT	GREASE NIPPLE M6	
7	814040	2	SEKSKANTSKRUE M20X40-8.8 ELZN	HEX. BOLT M20X40 GALV	
7	860170	2	BRIKKE Ø21-Ø37X3 ELZN	WASHER Ø21-Ø37X3 GALV	
8	321125	1	HJULSYLINDERFESTE HJULDRIFT	WHEEL CYL. BRACKET WHEELDRIVE	
9	321131	1	BOLT Ø35-Ø10/243/Ø10	BOLT Ø35-Ø10/243/Ø10	
10	865550	2	SPLINT 10X50 ELZN	SPLIT PIN 10X50 GALV	
11	814050	2	SEKSKANTSKRUE M20X50-8.8 ELZN	HEX. BOLT M20X50-8.8 GALV	
11	860170	4	BRIKKE Ø21-Ø37X3 ELZN	WASHER Ø21XØ37X3 GALV	
11	852167	2	NYLOCKMUTTER M20 ELZN.	NYLOCK NUT M20 GALV	
12	813850	2	SEKSKANTSKRUE M16X50-8.8 ELZN	HEX BOLT M16X50-8.8 GALV	
12	860166	4	BRIKKE Ø17-Ø30X3 ELZN	WASHER Ø17-Ø30X3 GALV	
12	852166	2	NYLOCKMUTTER M10 ELZN	NYLOCK NUT M10 GALV	
15	324762	1	HJULBRAKETT V.	WHEEL BRACKET LH	
16	321113	1	HYLSE	COLLAR	
17	870742	2	KULELAGER 6208-2RS	BALL BEARING 6208-2RS	
18	873540	1	SMØRENIPPEL M6 RETT	GREASE NIPPLE M6 STRAIGHT	
19	324790	1	SEKSKANTSKRUE M16X40	HEX. BOLT M16X40 W/GREASE	
			DRIVAKSEL M/HYDR.KOPLING	**DRIVE SHAFT**	
20	700501	1	HYDRAULISK KOPLING	HYDRAULIC CLUTCH	
21	324632	1	KJEDEHJUL 1" 30T M/LAGER	SPROCKET 1" 20T W/BEARING	
22	324635	1	KLEMPLATE	CLAMP	
23	813535	6	SEKSKANTSKRUE M10X35-8.8 ELZN	HEX. BOLT M10X35-8.8 GALV	
24	430794	1	HYLSE Ø36-Ø42.4X52	SPACER Ø36-Ø42.4X52	
25	323086	1	LUKE FOR KOPLING SV.	CLUTCH	
26	306202	1	HAKELÅS KOMPL.	LOCK ASSY	
27	813420	2	SEKSKANTSKRUE M8X20-8.8 ELZN	HEX. BOLT M8X20-8.8 GALV	
27	860158	4	BRIKKE Ø8.4-Ø17X1.6 ELZN	WASHER Ø8.4-Ø17X1.6 GALV	
27	852158	2	NYLOCKMUTTER M8 ELZN	NYLOCK NUT M8 GALV	
28	324631	1	DRIVAKSEL	DRIVE SHAFT	
29	324640	1	MOTHOLD	TURNING RESTRAINER	
30	813516	1	SEKSKANTSKRUE M10X16-8.8 ELZN	HEX. BOLT M10X16-8.8 GALV	
30	860160	1	BRIKKE Ø10.5-Ø21X2 ELZN	WASHER Ø10.5-Ø21X2 GALV	
31	324641	1	BRAKETT FOR HYDR.KOPLING SV.	BRACKET FOR HYDR. CLUTCH	
32	813635	2	SEKSKANTSKRUE M12X35-8.8 ELZN	HEX. BOLT M12X35-8.8 GALV	
			OLJETANK MONTERT (2000)	**OIL TANK ASSY (2000)**	
40	324675	1	STATIV FOR OLJETANK SV.	OIL TANK BRIDGE	
41	324682	1	KANAL FOR SLANGER SV.	HOSE BRIDGE	
42	324664	1	HYDR.OLJETANK 120L KOMPL.	HYDR. OIL TANK 120L ASSY	
43	324661	1	RETURFILTER KOMPL. UC-MFA3501	RETURN FILTER	
44	324658	1	HYDR. SENTRAL HJULDRIFT	HYDR. CENTRAL WHEEL DRIVE	
*	324662	1	FILTERELEMENT UC-R-6135	FILTER ELEMENT UC-R-6135	
45	324814	1	BRAKETT FRAMRE	FRONT BRACKET	
46	324815	1	BRAKETT BAKRE	REAR BRACKET	
47	813425	4	SEKSKANTSKRUE M8X25-8.8 ELZN	HEX. BOLT M8X25-8.8 GALV	
48	307824	2	ALBU 90GRD 1/4" BSP UI	BEND 90 DEG. 1/4" BSP	
49	324812	1	DEKSEL	COVER	
50	324813	2	GUMMI	RUBBER PLATE	
51	821416	4	LÅSESKRUE M8X16-4.6 ELZN	CARRIAGE BO M8X16-4.6 GALV	
52	813420	4	SEKSKANTSKRUE M8X20-8.8 ELZN	HEX. BOLT M8X20-8.8 GALV	
52	860158	12	BRIKKE Ø8.4-Ø17X1.6 ELZN	WASHER Ø8.4-Ø17X1.6 GALV	
52	852158	8	NYLOCKMUTTER M8 ELZN	NYLOCK NUT M8 GALV	
53	324687	1	FESTEKROK	HOOK-UP-PLATE	
54	324682	1	KANAL FOR SLANGER SV.	HOSE BRIDGE	
55	813420	4	SEKSKANTSKRUE M8X20-8.8 ELZN	HEX. BOLT M8X20-8.8 GALV	

Kverneland

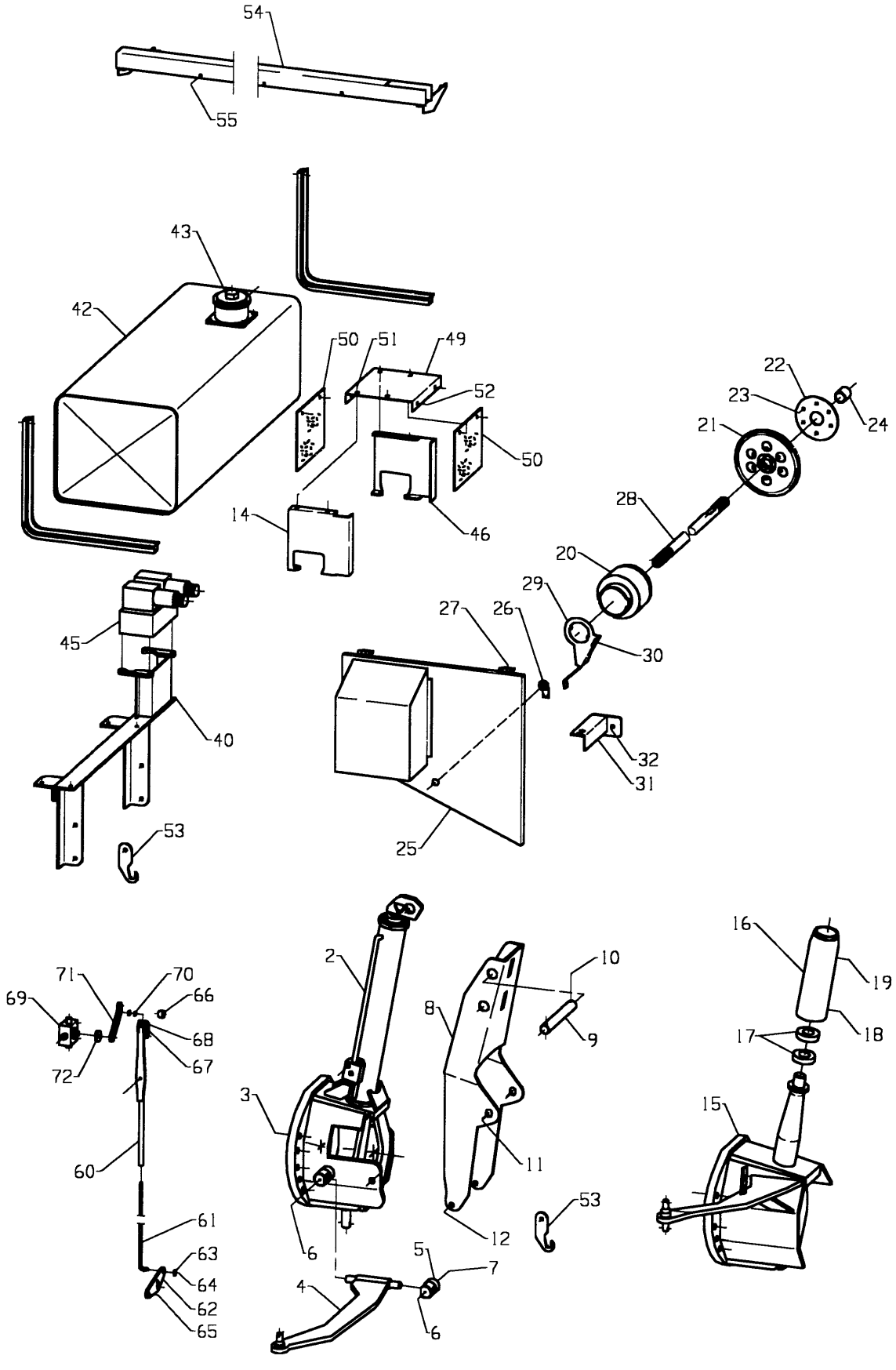

Fig. 52

Utgave: / Issue: 5	Redskap: / Implement: POTETHØSTER 2600 / POTATO HARVESTER 2600	Kverneland
Dato: / Date: 02-06	Enhet / Unit: HJULDRIFT / WHEEL DRIVE	52

Ref. No.	Delenr. Part no.	Ant. Qty.	Gjenstand	Description	Anmerkning Note
55	860158	8	BRIKKE Ø8.4-Ø17X1.6 ELZN	WASHER Ø8.4-Ø17X1.6 GALV	
55	852158	4	NYLOCKMUTTER M8 ELZN	NYLOCK NUT M8 GALV	
	324702		**UTLØSER KOMPL.**	**RELEASER ASSY**	
60	324703	1	UTLØSER SV.	RELEASER	
61	324713	1	STAG	STAY	
62	324715	1	FESTE	BRACKET	
63	860160	1	BRIKKE Ø10.5-Ø21X2 ELZN	WASHER Ø10.5-Ø21X2 GALV	
64	865170	1	SPLINT 3.2X20 ELZN	SPLIT PIN 3.2X20 GALV	
65	813535	1	SEKSKANTSKRUE M10X35-8.8 ELZN	HEX. BOLT M10X35-8.8 GALV	
65	860160	1	BRIKKE Ø10.5-Ø21X2 ELZN	WASHER Ø10.5-Ø21X2 GALV	
65	852160	1	NYLOCKMUTTER M10 ELZN	NYLOCK NUT M10 GALV	
66	324712	1	TRINSE	ROLLER	
67	866430	1	SPENNHYLSE 8X30	TENSION PIN	
68	813335	1	SEKSKANTSKRUE M6X36-8.8 ELZN	HEX. BOLT M6X35-8.8 GALV	
68	860156	2	BRIKKE Ø6.6-Ø12X1.5 ELZN	WASHER Ø6.6-Ø12X1.5 GALV	
68	852156	1	NYLOCKMUTTER M6 ELZN	NYLOCK NUT M6 GALV	
69	324847	1	KULEVENTIL 3-VEIS L BORING 1/4"	BALL VALVE 3-WAY L BORING 1/4"	
70	813360	4	SEKSKANTSKRUE M6X60-8.8 ELZN	HEX. BOLT M6X60-8.8 GALV	
70	860156	4	BRIKKE Ø6.6-Ø12X1.5 ELZN	WASHER Ø6.6-Ø12X1.5 GALV	
70	852156	4	NYLOCKMUTTER M6 ELZN	NYLOCK NUT M6 GALV	
71	324843	1	ARM	ARM	
72	300520	2	BRIKKE Ø17-Ø40X5 ELZN	WASHER Ø17-Ø40X5 GALV	
73	813316	1	SEKSKANTSKRUE M6X16-8.8 ELZN	HEX. BOLT M6X16-8.8 GALV	
73	860156	1	BRIKKE Ø6.6-Ø12X1.5 ELZN	WASHER Ø6.6-Ø12X1.5 GALV	
74	813450	1	SEKSKANTSKRUE M8X50-8.8 ELZN	HEX. BOLT M8X50-8.8 GALV	
74	860158	3	BRIKKE Ø8.4-Ø17X1.6 ELZN	WASHER Ø8.4-Ø17X1.6 GALV	
74	852158	1	NYLOCKMUTTER M8 ELZN	NYLOCK NUT M8 GALV	

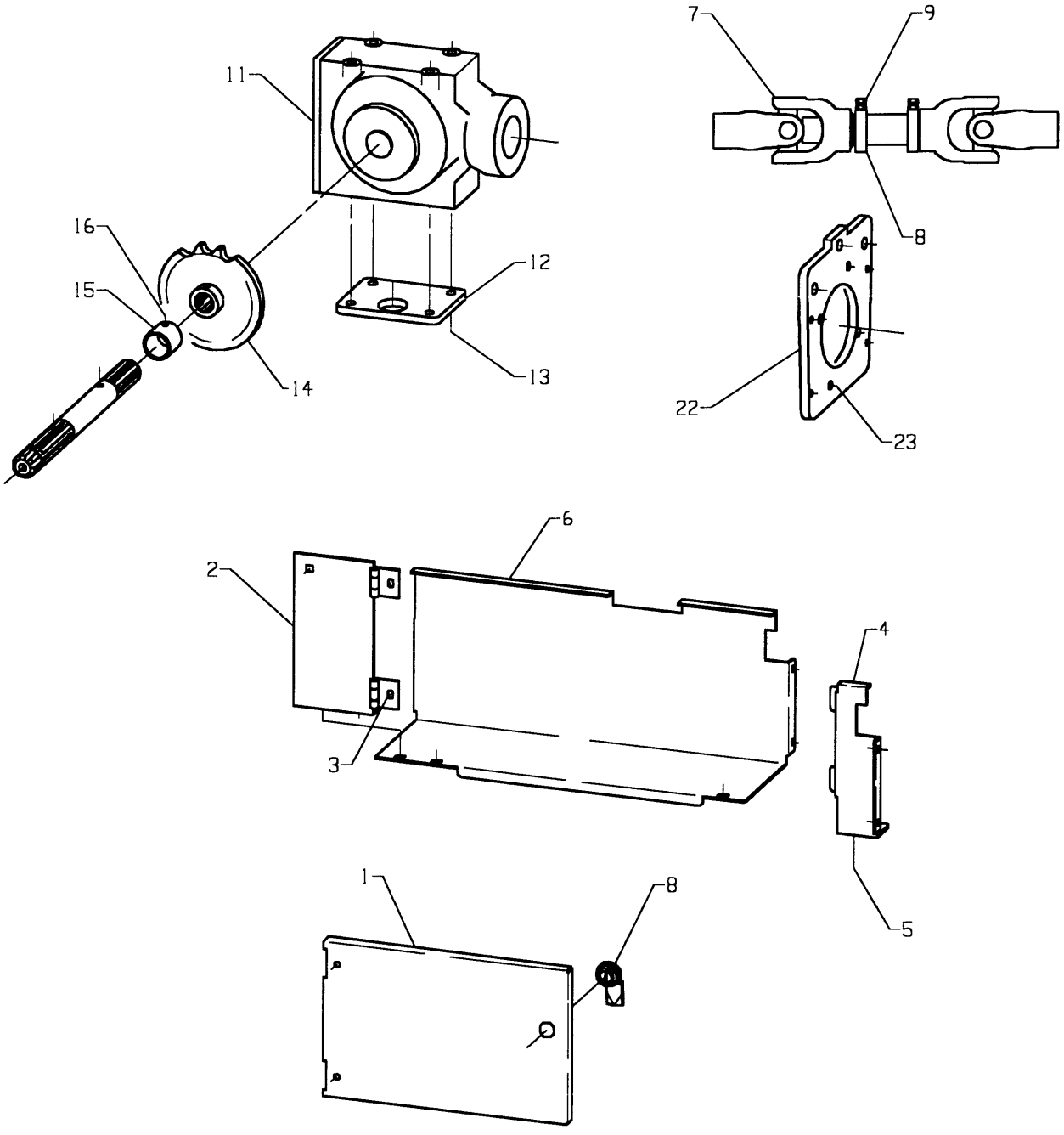

Fig. 53

Utgave: / Issue: 5	Redskap: / Implement: POTETHØSTER 2600 / POTATO HARVESTER 2600	Kverneland
Dato: / Date: 02-06	Enhet / Unit: PTO-SHAFT / KRAFTOVERFORINGSAKSEL	Fig nr.: 53

Ref. No.	Delenr. Part no.	Ant. Qty.	Gjenstand	Description	Anmerkning Note
1-8	**324611**	**1**	**SKJERM PUMPE-DRIVAKSEL KOMPL.**	**GUARD PUMP-DRIVE ASSY**	
1	324612	1	BAKSTYKKE	REAR PLATE	
2	324613	1	ENDESTYKKE H.	END PLATE RH	
2	813416	2	SEKSKANTSKRUE M8X16-8.8 ELZN	HEX. BOLT M8X16-8.8 GALV	
3	860158	4	BRIKKE Ø8.4-Ø17X1.6 ELZN	WASHER Ø8.4-Ø17X1.6 GALV	
3	852158	2	NYLOCKMUTTER M8 ELZN	NYLOCK NUT M8 GALV	
4	324614	1	ENDESTRYKKE V.	END PLATE LH	
5	813416	1	SEKSKANTSKRUE M8X16-8.8 GALV	HEX. BOLT M8X16-8.8 GALV	
5	860158	2	BRIKKE Ø8.4-Ø17X1.6 ELZN	WASHER Ø8.4-Ø17X1.6 GALV	
5	852158	1	NYLOCKMUTTER M8 ELZN	NYLOCK NUT M8 GALV	
6	324615	1	LUKE	LID	
7	813416	2	SEKSKANTSKRUE M8X16-8.8 ELZN	HEX. BOLT M8X16-8.8 GALV	
7	860158	2	BRIKKE Ø8.4-Ø17X1.6 ELZN	WASHER Ø8.4-Ø17X1.6 GALV	
7	852158	1	NYLOCKMUTTER M8 ELZN	NYLOCK NUT M8 GALV	
8	306202	1	HAKELÅS KOMPL.	LOCK ASSY	
9	813430	7	SEKSKANTSKRUE M8X30-8.8 ELZN	HEX. BOLT M8X30 GALV	
9	860158	14	BRIKKE Ø8.4-Ø17X1.6 ELZN	WASHER Ø8.4-Ø17X1.6 GALV	
9	852158	7	NYLOCKMUTTER M8 ELZN	NYLOCK NUT M8 GALV	
10	860166	1	BRIKKE Ø17-Ø30X3 ELZN	WASHER Ø17-Ø30X3 GALV	
11	324605	1	GIRBOKS	GEAR BOX	
*	324803		PAKN.SETT GEARBOKS SAI WR20	SEAL KIT GEARBOX SAI WR20	
12	324609	1	PLATE UNDER GIRKASSE	PLATE	
13	813650	4	SEKSKANTSKRUE M12X50-8.8 ELZN	HEX. BOLT M12X50-8.8 GALV	
13	860163	4	BRIKKE Ø13-Ø24X2.5 ELZN	WASHER Ø13-Ø24X2.5 GALV	
14	300388	1	KJEDEHJUL 1" 19 T SV.	SPROCKET 1" 19T	
15	324622	1	HYLSE Ø36-Ø42.4-45	COLLAR Ø36-Ø42.4X45	
16	813416	1	SEKSKANTSKRUE M8X16-8.8 ELZN	HEX. BOLT M8X16-8.8 GALV	
17-19	**324619**	**1**	**KRAFTOVERFØRINGSAKSEL**	**PTO-SHAFT**	
17	710102	2	KRAFTOVERFØRINGSAKSEL 280	PTO-SHAFT 280	
18	324617	2	LÅSERING	CIRCLIP	
19	813420	2	SEKSKANTSKRUE M8X20-8.8 ELZN	HEX. BOLT M8X20-8.8 GALV	
19	850108	2	SEKSKANTMUTTER M8-8 SORT	HEX. NUT M8-8 BLACK	
21	324660	1	PUMPE DANFOSS HLP 57 LS/CCW	PUMP DANFOSS HLP 57 LS/CCW	
22	324607	1	PUMPEFESTE	PUMP BRACKET	
23	813650	4	SEKSKANTSKRUE M12X50-8.8 ELZN	HEX. BOLT M12X50-8.8 GALV	
23	860163	8	BRIKKE Ø13-Ø24X2.5 ELZN	WASHER Ø13-Ø24X2.5 GALV	
23	852162	4	NYLOCKMUTTER M12 ELZN	NYLOCK NUT M12 GALV	
24	813860	3	SEKSKANTSKRUE M16X60-8.8 ELZN	HEX. BOLT M16X60-8.8 GALV	
24	860166	3	BRIKKE Ø17-Ø30X3 ELZN	WASHER Ø17-Ø30X3 GALV	
24	852166	3	NYLOCKMUTTER M16 ELZN	NYLOCK NUT M16 GALV	

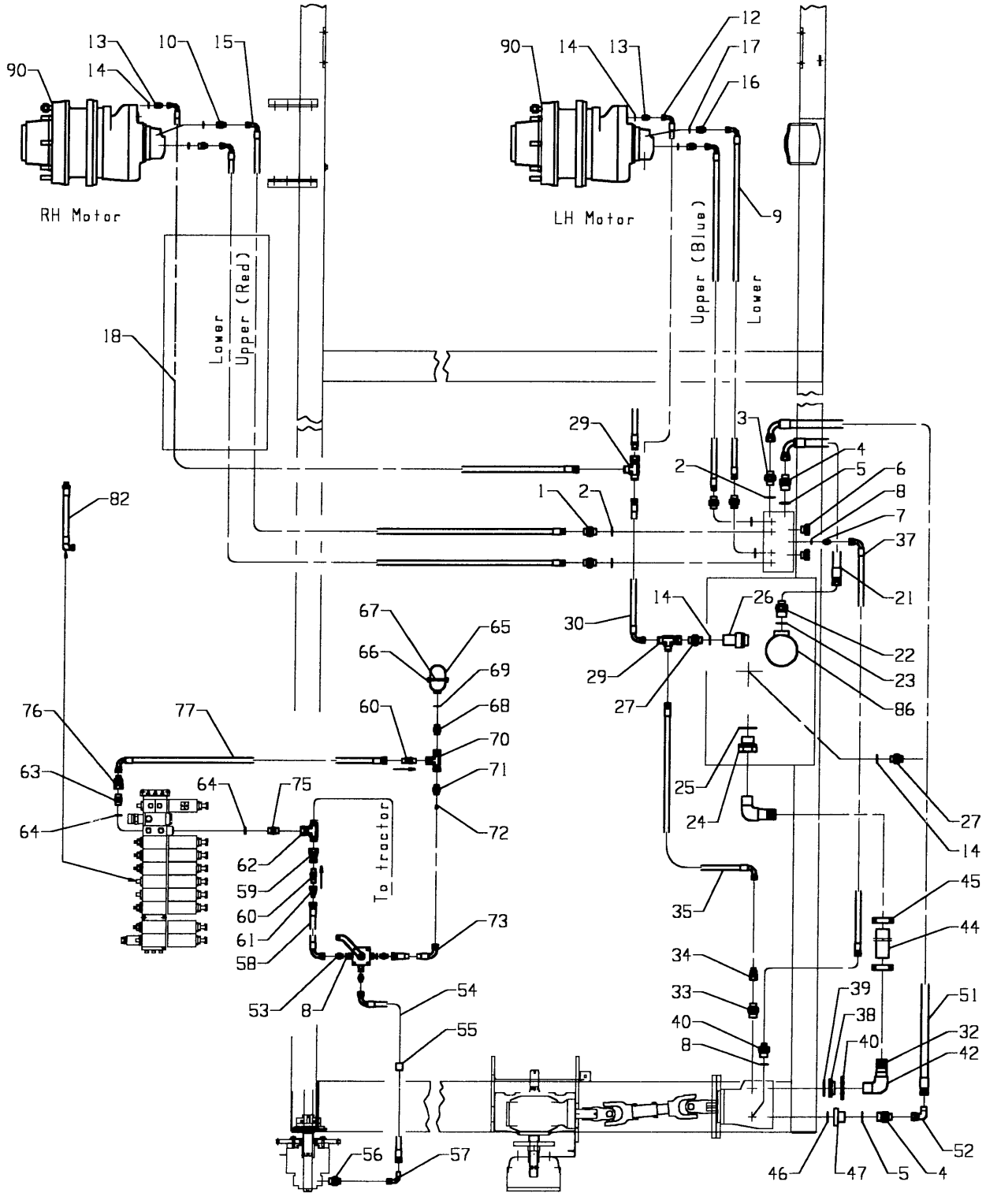
RH Motor
LH Motor
Lower
Upper (Red)
Upper (Blue)
Lower
To tractor

Fig. 54

Utgave: / Issue: 5	Redskap: / Implement: POTETHØSTER 2600 / POTATO HARVESTER 2600	Kverneland
Dato: / Date: 02-06	Enhet / Unit HYDRAULIKK / HYDRAULICS	Fig nr.: 54

Ref. No.	Delenr. Part no.	Ant. Qty.	Gjenstand	Description	Anmerkning Note
1	306756	4	ANSATS 1/2"-3/4" BSP UU	ADAPTOR 1/2"-3/4"	
2	306757	5	PAKNINGSRING 3/4" BOND SEAL	SEAL 3/4"	
3	320186	1	ANSATS 3/4"-3/4" BSP UU	ADAPTOR 3/4"-3/4"	
4	307804	3	ANSATS 3/4"-1" BSP UU	ADAPTOR 3/4"-1"	
5	307815	3	PAKNINGSRING 1" BOND SEAL	SEAL 1"	
6	306573	2	PLUGG 3/4" BSP M/PAKN.	PLUG 3/4"	
7	300972	1	ANSATS 1/4"-3/8 BSP UU	ADAPTOR 1/4"-3/8"	
8	300966	4	PAKNINGSRING 1/4" BOND SEAL	SEAL 1/4"	
9	313852	2	HYD.SL.1/2" 5000 IO8IO8-90G	HYDR. HOSE 1/2" 5000	
10	324666	2	ANSATS 1/2"-1" BSP UU	ADAPTOR 1/2"-1"	
12	324728	1	HYD.SL.3/8" 4100 U08 IO6-90G	HYDR. HOSE 3/8" 4100	
13	410747	1	ANSATS 3/8"-1/2" BSP UU	ADAPTOR 3/8"-1/2"	
14	219669	4	PAKNINGSRING 1/2" BOND SEAL	SEAL 1/2"	
15	306702	2	HYD.SL.1/2" 7300 IO8IO8-90G	HYDR. HOSE 1/2" 7300	
16	324666	2	ANSATS 1/2"-1" BSP UU	ADAPTOR 1/2"-1"	
17	307815	2	PAKNINGSRING 1" BOND SEAL	SEAL 1" BOND SEAL	
18	324729	1	HYD.SL.3/8" 6800 IO8-IO6-90G	HYDR. HOSE 3/8" 6800	
21	322397	1	HYD.SL.3/4" 700 I12I12-90G	HYDR. HOSE 3/4" 700	
22	320188	1	ANSATS 3/4" -1 1/4" BSP UU	ADAPTOR 3/4"-1 1/4"	
23	320189	1	PAKNINGSRING 1 1/4" BOND SEAL	SEAL 1 1/4"	
24	324691	1	ANSATS 2"-1 1/4" BSP UI	ADAPTOR 2"-1 1/4"	
25	324697	1	PAKNINGSRING 2"	SEAL 2"	
26	324688	1	STUSS 2"	CONNECTING JOINT 2"	
27	300971	2	ANSATS 1/2"-1/2" BSP UU	ADAPTOR 1/2"-1/2"	
29	411406	3	T-KOPLING 1/2" BSP UIU	T-JUNCTION 1/2"	
30	322377	1	HYD.SL.1/2" 750 IO8IO8-90G	HYDR. HOSE 1 1/4"	
31	306566	1	ALBU INNV.-UTV.GJ.11/4 R.F.92	BEND 1 1/4"	
32	306556	2	SLANGESTUSS Ø40-R1 1/4"	HOSE CONNECTOR Ø40-R1 1/4"	
33	304667	1	ANSATS J GE-U 3/4"-7/8"	ADAPTOR J GE-U 3/4"-7/8"	
34	324670	1	ANSATS 3/8"U-JIC 3/4"I	ADAPTOR 3/8"U-JIC 3/4"I	
35	324747	1	HYD.SL.3/8" 1500 IO8 IO6-90GR.	HYDR. HOSE R3/8" 1500	
36	324668	1	ANSATS R1/4"-JIC 7/16" UU	ADAPTOR R1/4"-JIC 7/16" UU	
37	306710	1	HYD.SL.1/4" 2200 IO4IO6-90G	HYDR. HOSE 1/4" 2200	
38	324693	1	SUGEFLENS	SUCTION FLANGE	
39	872055	1	O-RING 55.0X3.0	O-RING 55.0X3.0	
40	324694	1	KLEMPLATE Ø13-65-30 Ø50	CLAMP Ø13-65-30 Ø50	
41	825632	4	SYL.SKR. M/6KT.HOL 1/2"X32	CYL. SCREW 1/2"X32	
42	306566	1	ALBU INNV.-UTV.GJ.11/4" R.F.92	BEND 1 1/4"	
44	324745	1	HYD.SUGESLANGE 1 1/2" 1200	HYDR. SUCTION 1 1/2" 1200	
45	320180	2	SLANGEKLEMMER BOLTER. 41-50	HOSE CLAMP BOLTS 41-50	
46	324690	1	O-RING 39.9X3.53	O-RING 39.9X3.53	
47	324689	1	SAE FLENS 3 R1"	FLANGE SAE 3 R1"	
48	825432	4	SYL.SKR.M6KT HOL 3/8"X32-12.9	CYL. SCREW 3/8"X32-12.9	
51	324746	1	HYD.SL.3/4" 2400 I12I12-90GR	HYDR.HOSE 3/4" 2400	
52	324695	1	ALBU 90GRD 3/4" BSP UI	BEND 90DEG 3/4"	
53	300957	3	ANSATS 1/4"-1/4" BSP UU	ADAPTOR 1/4"-1/4"	
54	324736	1	HYD.SL.1/4" 2560 I04I04-90G	HYDR. HOSE 1/4" 2560	
55	219694	1	KLAMMER	KLAMMER	
56	324669	1	ANSATS 1/4"-M12X1.5 UU	ADAPTOR 1/4"-M12X1.5	
57	307824	1	ALBU 90GRD 1/4" BSP UI	BEND 90DEG 1/4"	
58	324735	1	HYD.SL.1/4" 980 I04I04-90G	HYDR. HOSE 1/4" 980	
59	441031	1	ANSATS 3/8" 1/2" BSP II	ADAPTOR 3/8" 1/2"	
60	411127	1	TILBAKESLAGSVENTIL 0,35 BAR	NON-RETURN VALVE	
61	300997	1	ANSATS 1/4"-3/8" BSP UI	ADAPTOR 1/4"-3/8"	
62	411408	1	T-KOPLING 1/2" BSP UUI	T-JUNCTION 1/2"	
63	307817	1	ANSATS 1/2"-M22X1.5 BSP/MM UU	ADAPTOR 1/2"-M22X1.5	
64	307814	2	PAKNINGSRING M22 BOND SEAL	SEAL M22	
65	324648	1	AKKUMULATOR 0.7L 70 BAR	ACCUMULATOR 0.7L 70 BAR	
66	306793	1	FESTE	BRACKET	
67	300897	1	KLEMBØYLE	U-BOLT	
68	300955	1	ANSATS 3/8"-M18X1.5 BSP/MM UU	ADAPTOR 3/8"-M18X1.5	
69	300965	1	PAKNINGSRING M18	SEAL M18	

Kverneland

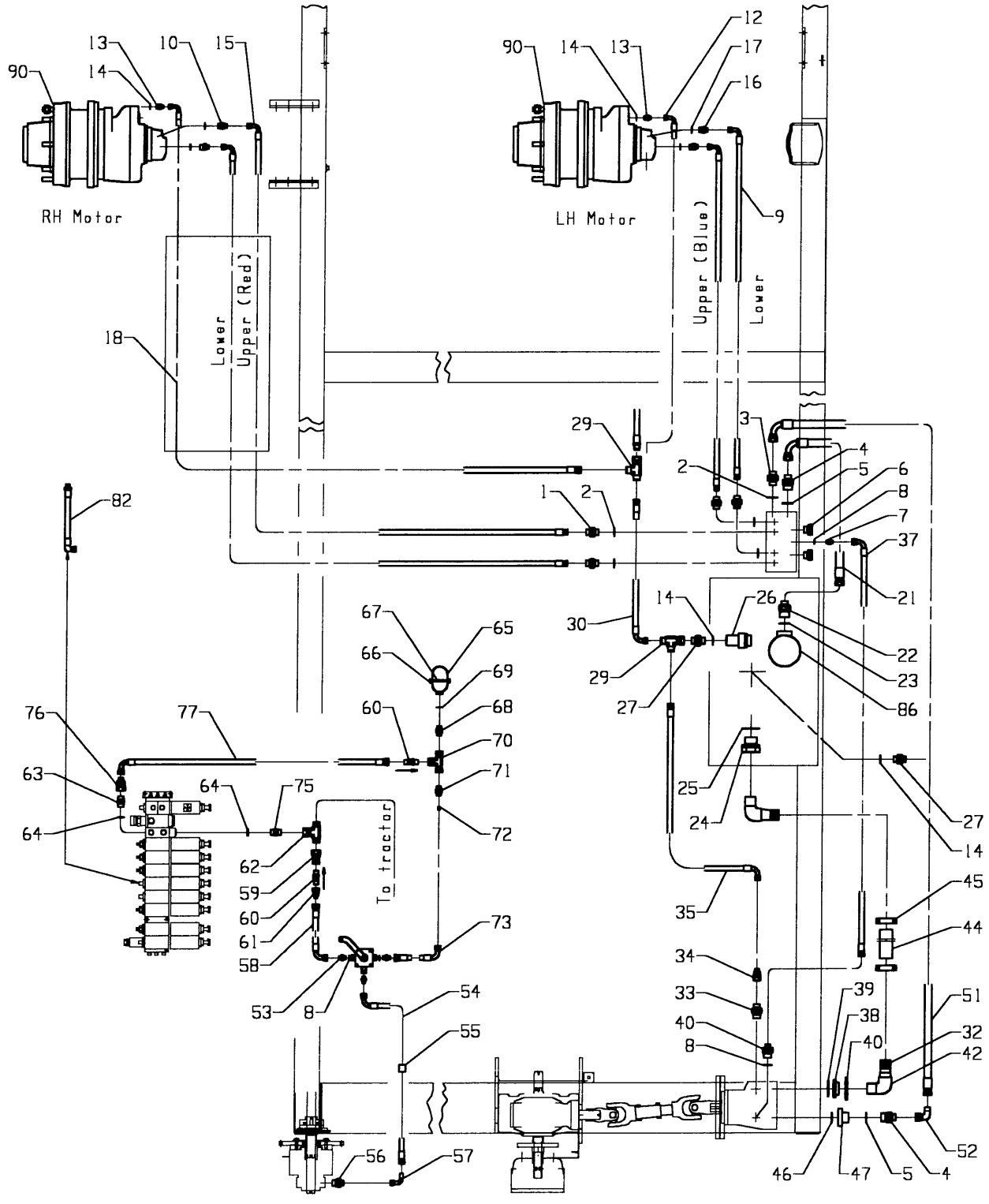

Fig. 54

Utgave: / Issue: 5	Redskap: / Implement: POTETHØSTER 2600 / POTATO HARVESTER 2600	Kverneland
Dato: / Date: 02-06	Enhet / Unit HYDRAULIKK / HYDRAULICS	Fig nr.: 54

Ref. No.	Delenr. Part no.	Ant. Qty.	Gjenstand	Description	Anmerkning Note
70	300973	1	T-KOPLING 3/8" BSP III	T-JUNCTION 3/8"	
71	324671	1	ANSATS 1/4"-3/8" BSP UU-M8	ADAPTOR 1/4"-3/8" BSP UU-M8	
72	300953	1	STRUPENIPPEL M8 Ø1,0 MM	RESTRICTOR M8 Ø1.0MM	
73	324739	1	HYD.SL.1/4" 1280 IO4IO4-90G	HYDR. HOSE 1/4" 1280	
74	411127	1	TILBAKESLAGSVENTIL 0,35 BAR	NON-RETURN VALVE 0,35 BAR	
75	307817	1	ANSATS 1/2"-M22X1.5 BSP/MM UU	ADAPTOR 1/2"-M22X1.5	
76	304005	1	ANSATS 1/4"-1/2" BSP UI	ADAPTOR 1/4"-1/2" BSP UI	
77	324738	1	HYD.SL.1/4" 320 IO6IO4-90G	HYDR. HOSE 1/4" 320	
78	300877	8	RØRKLAMMERHALVDEL Ø22 DOBBEL	TUBE CLAMP HALF Ø22 DOUBLE	
79	300886	4	TOPPLATE 20-25 DOBBEL	PLATE 20-25 DOUBLE	
80	313824	10	BUNTEBAND 4,8X200	STRAP 4.8X200	
81	216071	10	BUNTEBAND 3.5X140	STRAP 3.5X140	
82	300991	2	HYD.SL.1/4" 600UO4IO4-90G ALBU	HYDR. HOSE 1/4" 600	
83	300875	2	RØRKLAMMERHALVDEL Ø14 DOBBEL	TUBE CLAMP HALF Ø14 DOUBLE	
84	300885	1	TOPPLATE 14-18 DOBBEL	PLATE 14-18 DOUBLE	
85	813460	1	SEKSKANTSKRUE M8X60-8.8 ELZN	HEX. BOLT M8X60-8.8 GALV	
85	860158	1	BRIKKE Ø8.4-Ø17X1.6 ELZN	WASHER Ø8.4-Ø17X1.6 GALV	
85	852158	1	NYLOCKMUTTER M8 ELZN	NYLOCK NUT M8 GALV	
86	324663	1	MANOMETER Ø63 0-400 BAR	PRESSURE GAUGE Ø63 0-400 BAR	
90	324802	2	OLJEMOTOR SAI WR20+GM2 1267CCM	OIL MOTOR SAI WR20+GM2 1267CCM	

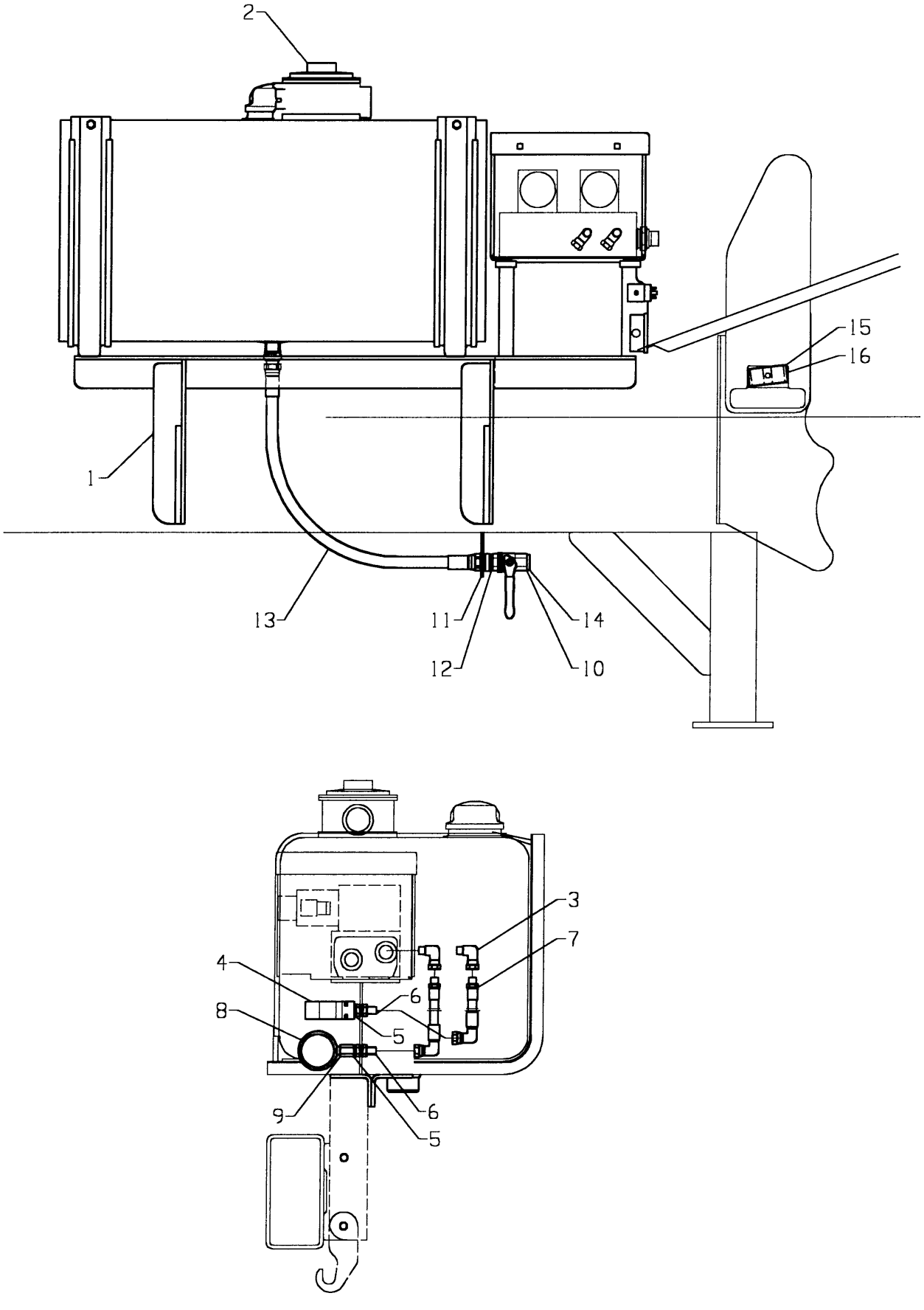

Fig. 55

Utgave: / Issue:	5	Redskap: / Implement:	POTETHØSTER 2600 POTATO HARVESTER 2600	Kverneland
Dato: / Date:	02-06	Enhet / Unit	OLJETANK - HYDRAULIKK OIL TANK - HYDRAULICS	Fig nr.: 55

Ref. No.	Delenr. Part no.	Ant. Qty.	Gjenstand	Description	Anmerkning Note
1	324675	1		OIL TANK RACK	
2	324661	1		RETURN FILTER UC-MFA3501-345	
3	307824	2		BEND 1/4"	
4	306697	1		PRESSURE CONTROLLER	
5	300966	2		SEAL 1/4"	
6	440092	2		BULKHEAD COUPLING 1/4"	
7	300990	2		HYDR. HOSE 1/4" 320	
8	324663	1		PRESSURE GAUGE Ø63 0-400 BAR	
9	300980	1		SOCKET 1/4"	
10	324686	1		BALL BRASS VALVE 1/2" BSP	
11	300971	1		HEXAGON NIPPLE 1/2"-1/2" BSP	
12	219669	1		SEAL 1/2" PP 45-D	
13	322344	1		HYDR. HOSE 1/2" 590 I08I08-OG	
14	306571	1		PLUG 1/2" BSP W/SEAL	
15	300877	1		TUBE CLAMP HALF Ø22 DOUBLE	
16	300886	1		PLATE 20-25	

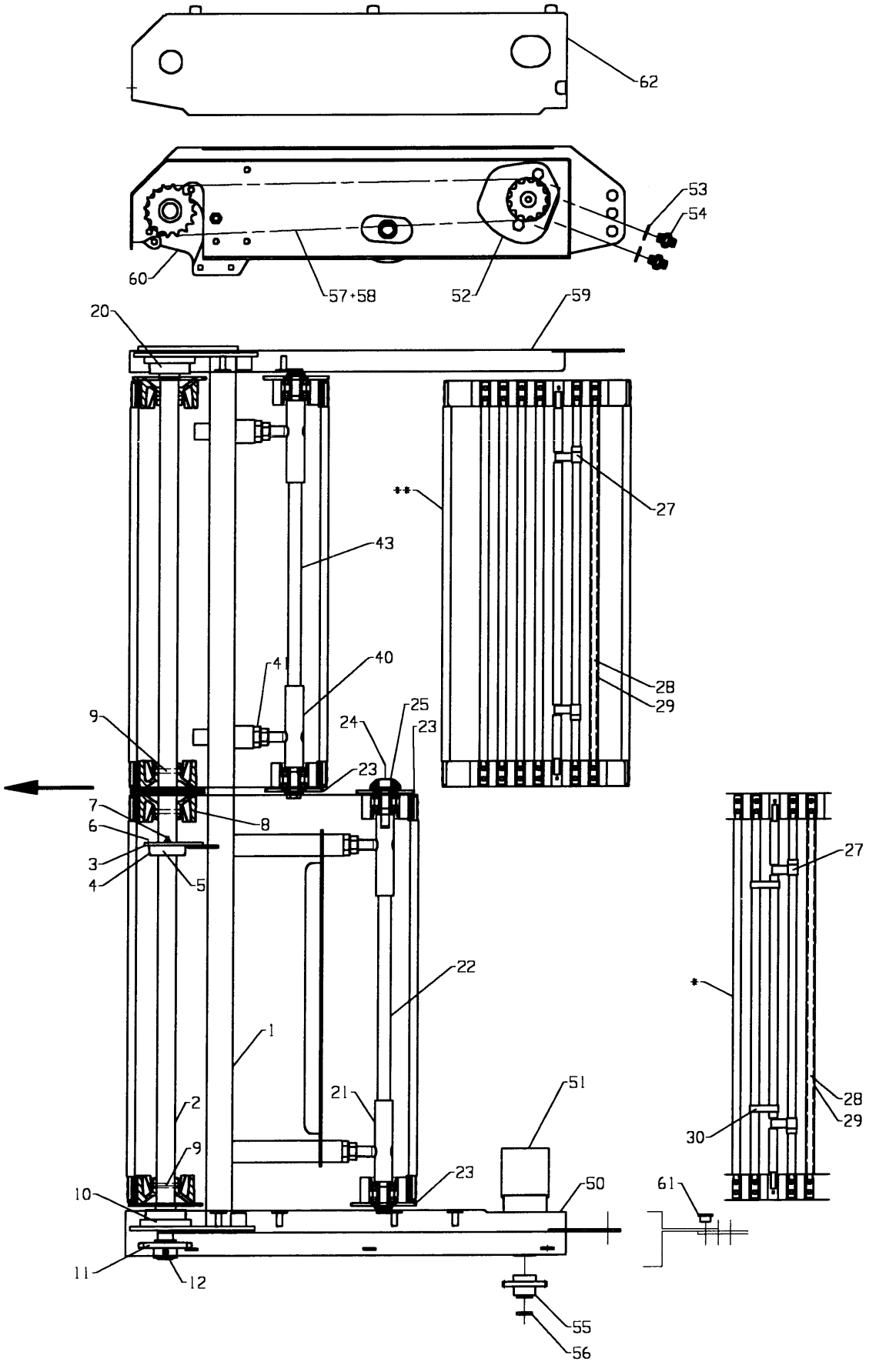
62
53
54
60
57+58
52
59
20
27
43
41
40
28
29
9
25
24
23
23
7
8
6
3
4
5
27
22
1
51
2
21
28
29
30
9
23
50
61
10
11
12
55
56

Fig. 56

Utgave: / Issue: 5	Redskap: / Implement: POTETHØSTER 2600 / POTATO HARVESTER 2600	Kverneland
Dato: / Date: 02-06	Enhet / Unit: BELTEFORDELER / WEB DISTRIBUTOR	Fig nr.: 56

Ref. No.	Delenr. Part no.	Ant. Qty.	Gjenstand	Description	Anmerkning Note
1	324862	1	BELTERAMME SV.	WEB FRAME	
2-12	**324875**	**1**	**DRIVAKSEL MONTERT**	**DRIVE SHAFT ASSY**	
2	324876	1	DRIVAKSEL	DRIVE SHAFT	
3	324886	1	LAGERFESTEPLATE	BEARING BRACKET	
4	231037	1	LAGERHUS Ø62-Ø37	BEARING HOUSING Ø62-Ø37	
5	870636	1	KULELAGER 6007-RS	BALL BEARING 6007-RS	
6	813420	4	SEKSKANTSKRUE M8X20-8.8 ELZN	HEX. BOLT M8-20-8.8 GALV	
6	860158	4	BRIKKE Ø8.4-Ø17X1.6 ELZN	WASHER Ø8.4-Ø17X1.6 ELZN	
7	873544	1	SMØRENIPPEL M6-90GR.	GREASE NIPPLE M6-90DEG.	
8	300404	4	BELTEDREV	BELT WHEEL	
9	866450	4	TENSION PIN 8X50X1.5	TENSION PIN 8X50X1.5	
10	870144	1	KULELAGER SKF-FYTB30TF	BALL BEARING SKF-FYTB30TF	
11	324061	1	KJEDEHJUL 3/4" 16T SV.	SPROCKET 3/4" 16T	
12	866550	1	SPENNHYLSE 10X50	TENSION PIN 10X50X2	
20	870144	1	KULELAGER SKF-FYTB30TF	BALL BEARING SKF-FYTB30TF	
21	324882	2	VENDEAKSEL V. SIDE SV.	TURNING AXLE LH	
22	324885	1	AKSEL Ø25X556	SHAFT Ø25X556	
23	301146	1	FLENSRULL Ø90-Ø114 MED GUMMI	FLANGED ROLLER Ø90XØ114 RUBBER	
24	825880	1	SYL.SKR. M/6KT.HOL M16X80-12.9	CYL. SCREW M16-80-12.9	
25	301149	1	AVVISERBRIKKE Ø16.5-Ø60X19	DEFLECTOR WASHER Ø16.5-Ø60X19	
26	813880	1	SEKSKANTSKRUE M16X80-8.8 ELZN	HEX. BOLT M16X80-8.8 GALV	
*	**324936**		**FORDELERB. 800X36-20 KORT**	**WEB DISTRIBUTOR 800X36-20 SHORT**	
**	**324940**		**FORDELERB. 800X36-20 LANGT**	**WEB DISTRIBUTOR 800X36-20 LONG**	
27	324946	1	STEINFELLE 800X36-20 M/PVC H.	STONE TRAP 800X36-20 M/PVC	
28	319806	1	BELTESPIL	ROD Ø10	
29	319807	1	PLASTOVERDEKKING Ø16X700	PVC COVER Ø16X700	
30	411125	1	BUNTEBAND 12.5X500	HOSE STRIP 12.5X500	
40	324878	1	VENDEAKSEL H. SIDE SV.	TURNING AXLE RH	
41	303683	2	MUTTER	NUT	
42	850170	2	SEKSKANTMUTTER M20-8 ELZN.	HEX. NUT M20-8 ELZN	
43	324885	1	AKSEL Ø25X556	SHAFT Ø25X556	
45	813880	2	SEKSKANTSKRUE M16X80-8.8 ELZN	HEX. BOLT M16X80-8.8 GALV	
50	324900	1	SIDE V. SV.	SIDE LH SV.	
51	900508	1	OLJEMOTOR 165CCM AKSEL Ø25	OIL MOTOR 165CCM SHAFT Ø25	
*	900501	1	PAKNINGSSETT FOR MF761 Ø25	SEAL KIT FOR MF761 Ø25	
52	324887	1	KLEMPLATE SV.	CLAMP W/BOLTS	
53	219669	2	PAKNINGSRING 1/2" BOND SEAL	SEAL 1/2" PP 45-D	
54	410747	2	ANSATS 3/8"-1/2" BSP UU	MALE ADAPTOR 3/8"-1/2"	
55	309129	1	KJEDEHJUL 3/4" 13T SV.	SPROCKET 3/4" 13T	
56	410141	1	BRIKKE Ø9-Ø35X4	WASHER Ø9-Ø35X4	
57	901848	1	RULLEKJEDE 3/4"X1657	CHAIN 3/4"X1657	
58	901802	1	RULLEKJEDELÅS 3/4"	CHAIN CONNECTOR 3/4"	
59	324908	1	SIDE H. SV.	SIDE RH	
60	324893	1	FOTPLATE	BASE PLATE	
61	215199	2	LAGERFORING Ø12.7X9-Ø20/6	BEARING LINING Ø12.7X9-Ø20/6	
62	324889	1	SKJERM	GUARD	

Kverneland

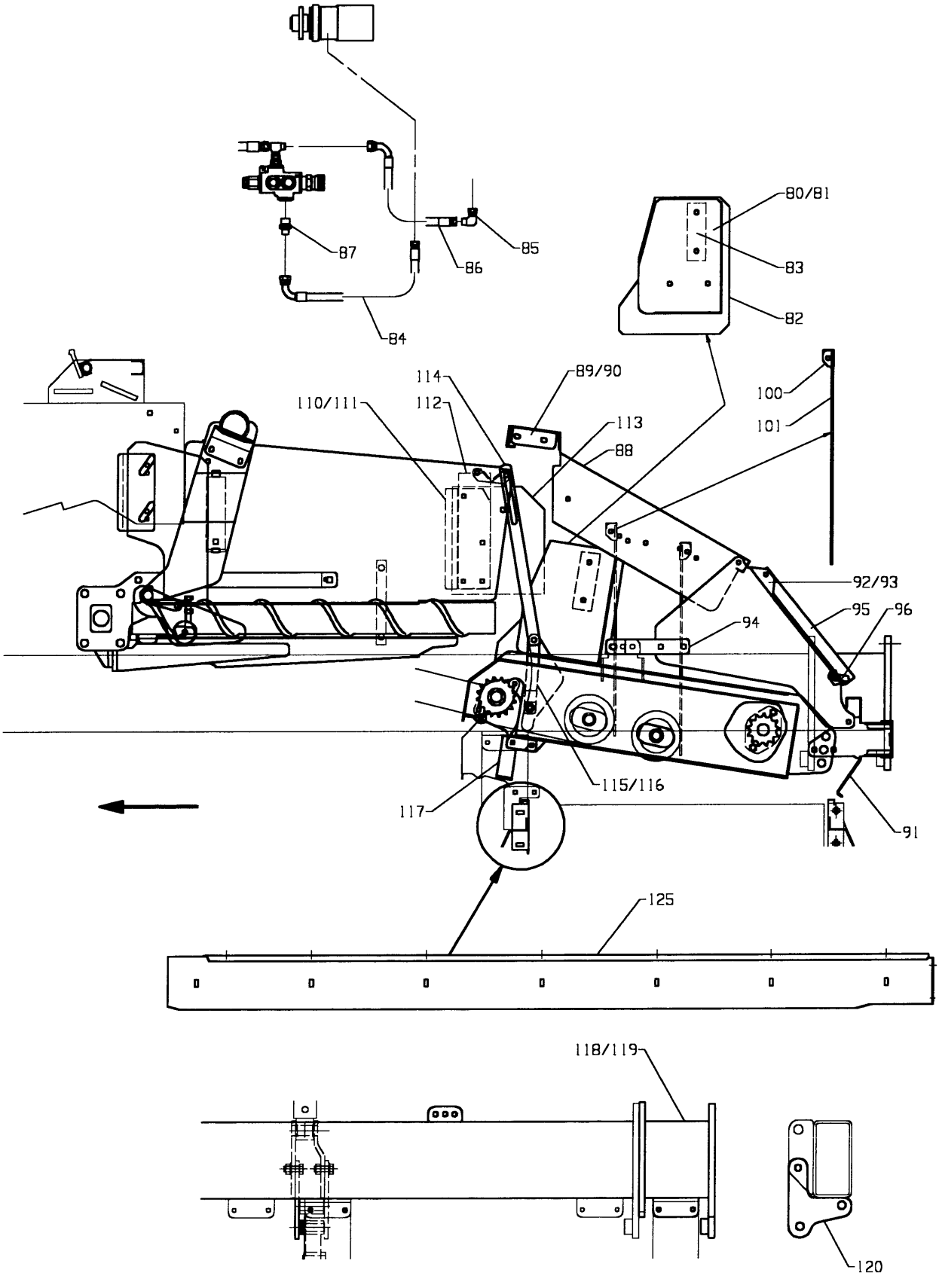

Fig. 56

Utgave: / Issue: 5	Redskap: / Implement: POTETHØSTER 2600 / POTATO HARVESTER 2600	Kverneland
Dato: / Date: 02-06	Enhet / Unit: BELTEFORDELER / WEB DISTRIBUTOR	Fig nr.: 56

Ref. No.	Delenr. Part no.	Ant. Qty.	Gjenstand	Description	Anmerkning Note
80	324198	1	BAKPLATE V.	PLATE LH	
81	324199	1	BAKPLATE H.	PLATE RH	
82	324181	2	LEDEGUMMI	RUBBER	
83	324182	2	KLEMLIST	LIST	
84	307742	1	HYD.SL.3/8" 700 I06I06-90G	HYDR. HOSE 3/8" 700 I06I06-90D	
85	316167	1	ALBU 90GRD 3/8" BSP UI	BEND 90D 3/8" BSP UI	
86	307822	1	HYD.SL 3/8" 750 I06I08-90G	HYDR. HOSE 3/8" 750 I06I08-90G	
87	307818	1	ANSATS 3/8"-M22X1.5 BSP/MM UU	ADAPTOR 3/8"-M22X1.5X1.5 BSP/MM	
88-101	**324918**		**VEWRNESKJERM BAKRE KOMPL.**	**REAR GUARD ASSY**	
88	324920	1	DEKSEL	COVER	
89	324128	1	FESTE V.	BRACKET L.	
90	324129	1	FESTE H.	BRACKET R.	
91	319853	1	PLATE	PLATE	
92	324921	1	SIDEPLATE V.	SIDE PLATE LH	
93	324922	1	SIDEPLATE H.	SIDE PLATE RH	
94	319862	2	FESTEVINKEL	BRACKET	
95-97	**320730**	**1**	**VERNESKJERM MONT.**	**PROTECTION PLATES ASSY**	
95	320731	1	VERNESKJERM SV.	PROTECTION PLATE	
96	303172	2	LÅS	LOCK	
97	220543	2	SKILT KLEMFARE AKSIALRULLER	STICKER DANGER AXIAL ROLLERS	
100-101	**319867**	**2**	**DEMPEGARDIN KOMPL.**	**DAMPERCURTAINS ASSY**	
100	319868	2	FESTEPROFIL	BRACKET	
101	319869	8	GUMMIPLATE	RUBBER PLATE	
110	324113	1	LEDEPLATE V.	GUIDING PLATE LH	
111	324114	1	LEDEPLATE H.	GUIDING PALTE RH	
112	324116	2	GUMMI	RUBBER	
113	322018	2	LEDEGUMMI	RUBBER GUARD	
114	324192	2	SLISSE	SLIT	
115	324890	1	OPPHENGSØRE V.	SUSPENSION EAR LH	
116	324891	1	OPPHENGSØRE H.	SUSPENSION EAR RH	
117	324896	2	FOT	BASE	
118	319752	1	RAMMEFORLENGER 20CM V. SV.	FRAME EXTENSION 20CM LH	
119	319753	1	RAMMEFORLENGER 20CM H. SV.	FRAME EXTENSION 20CM RH	
120	319770	2	FESTELASK ELEVATOR	BRACKET ELEVATOR	
125	324895	1	SKJERM FRAMRE	SIDE PANEL FORWARD	

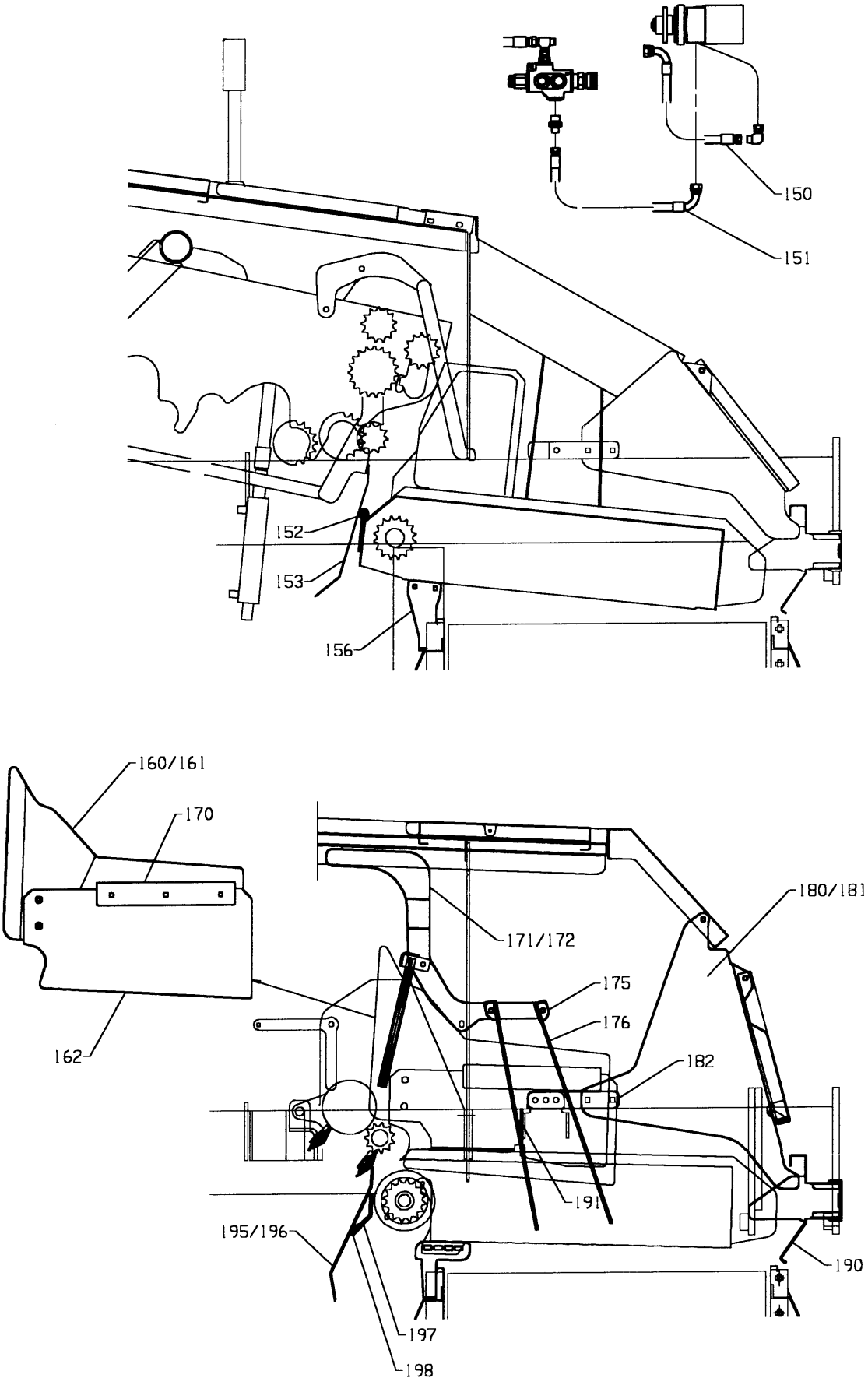
150
151
152
153
156
160/161
170
162
171/172
175
176
182
180/181
191
195/196
197
198
190

Fig. 56

Utgave: / Issue:	5	Redskap: / Implement:	POTETHØSTER 2600 / POTATO HARVESTER 2600	Kverneland
Dato: / Date:	02-06	Enhet / Unit	BELTEFORDELER / WEB DISTRIBUTOR	Fig nr.: 56

Ref. No.	Delenr. Part no.	Ant. Qty.	Gjenstand	Description	Anmerkning Note
	72644		**BELTEFORDELER FOR 2611 - 2631**	**WEB DISTRIBUTOR FOR 2611 - 2631**	
150	319849	1	HYDR.SL.3/8" 550 I06I08-90G	HYDR. HOSE 3/8" 550 I06I08-90D	
151	440086	1	HYD.SL.3/8" 390 I06I06-90G	HYDR. HOSE 3/8" 390 I06I06-90D	
152	324926	2	RØR	TUBE	
153	323788	3	PLASTSLANGE FOR SORTERBORDHOLD	PLASTIC HOSE	
155	324925	2	HOLDER	HOLDER	
156	324897	2	FOT	BASE	
	72645		**BELTEFORDELER FOR T2621**	**WEB DISTRIBUTOR FOR T2621**	
160	323880	1	LEDEPLATE V.	GUARD LH	
161	323881	1	LEDEPLATE H.	GUARD RH	
162	307386	2	KLEMLIST	RETAINER	
170	323886	2	GUMMISKJERM	RUBBER DEFLECTOR	
171-199	**323888**	**1**	**VERNESKJERM TELEBELTE M/BELTEF.**	**SAFETY GUARD TELEW. W/WEB DISTR**	
171	323874	1	GARDINHOLDER V.	CURTAIN LH	
172	323875	1	GARDINHOLDER H.	CURTAIN RH	
	323883		**DEMPEGARDIN FRAMRE KOMPL.**	**DAMPERCURTAINS FRONT ASSY**	
	323884		**DEMPEGARDIN BAKRE KOMPL.**	**DAMPERCURTAINS BACK ASSY**	
175	323885	2	FESTEPROFIL	BRACKET	
176	319869	8	GUMMIPLATE	RUBBERPLATE	
180	323890	1	SIDEPLATE V.	SIDE PLATE LH	
181	323891	1	SIDEPLATE H.	SIDE PLATE RH	
182	319862	2	FESTEVINKEL	BRACKET	
185-187	**320730**		**VERNESKJERM MONT.**	**PROTECTION PLATES**	
185	320731	1	VERNESKJERM SV.	PROTECTION PLATE	
186	303172	2	LÅS	LOCK	
187	220543	2	SKILT KLEMFARE AKSIALRULLER	STICKET DANGER AXIAL ROLLERS	
195	324152	1	LEDEPLATE V.	GUIDE LH	
196	324153	1	LEDEPLATE H.	GUIDE RH	
197	324898	2	STOPPER	STOPPER	
198	324899	2	PLASTSLANGE Ø3/4"X48	PLASTIC HOSE Ø3/4"X48	
199	324896	1	FOT	BASE	

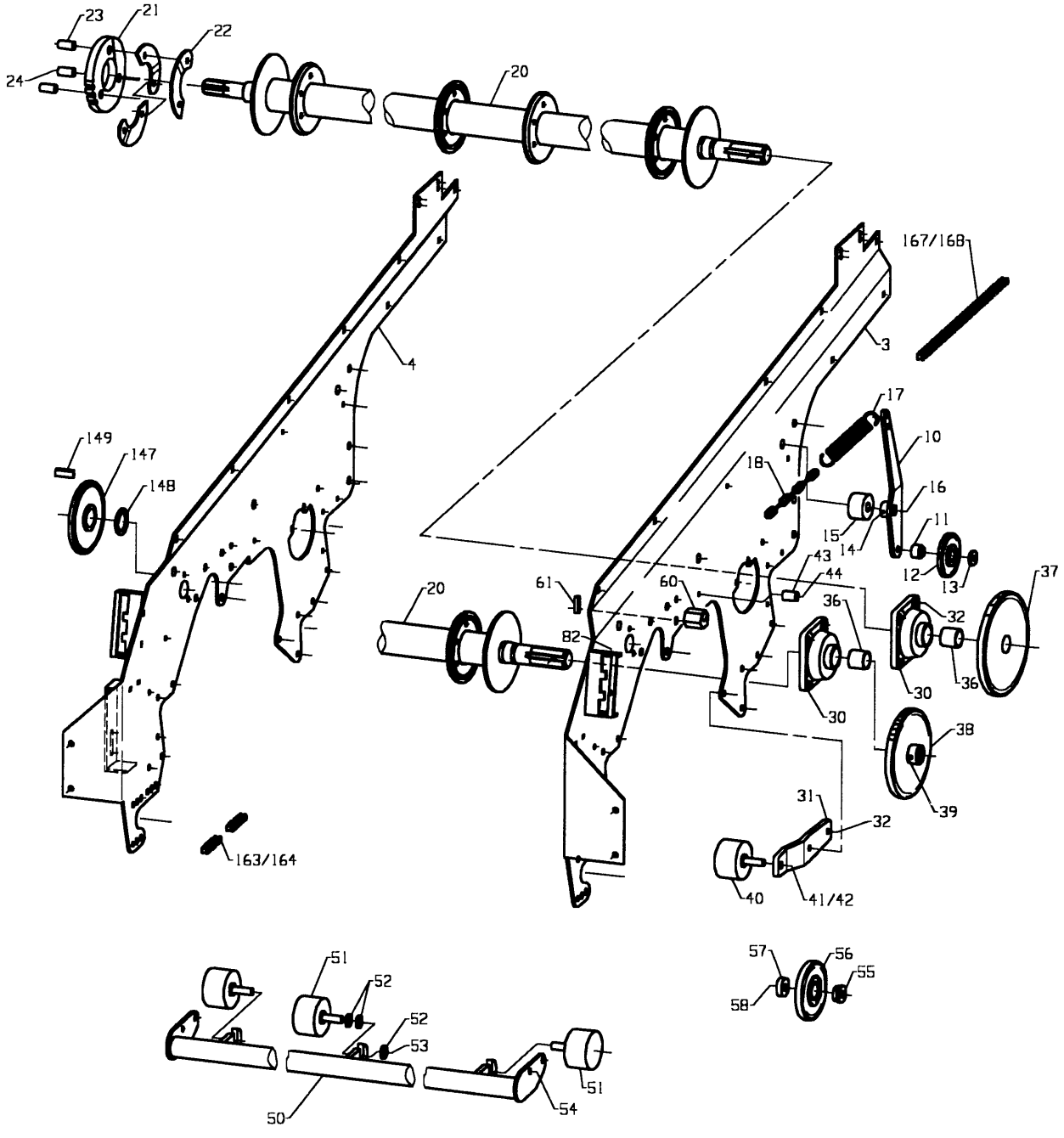
23
21
22
24
20
4
167/168
3
17
10
18
16
15
14
11
12
13
43
44
37
149
147
148
61
60
20
82
36
32
30
36
30
38
39
31
32
40
41/42
163/164
51
52
52
53
50
51
54
57
56
55
58

Fig. 57

Utgave: / Issue: 5	Redskap: / Implement: POTETHØSTER 2600 / POTATO HARVESTER 2600	Kverneland
Dato: / Date: 02-06	Enhet / Unit: DRIVVERK - TELEBELTE / DRIVE SHAFT - TELEWEB	Fig nr.: 57

Ref. No.	Delenr. Part no.	Ant. Qty.	Gjenstand	Description	Anmerkning Note
			SERIENUMMER 260185-	**SERIAL NUMBER .260185-**	
3	323652	1	RAMMEPLATE V. SV	FRAME PLATE LH	
4	323653	1	RAMMEPLATE H. SV	FRAME PLATE RH	
5	813845	10	SEKSKANTSKRUE M16X45-8.8 ELZN	HEX. BOLT M16X45-8.8 GALV	
5	860166	20	BRIKKE Ø17-Ø30X3 ELZN	WASHER Ø17-Ø30X3 GALV	
5	852166	10	NYLOCKMUTTER M16 ELZN	NYLOCK NUT M16 GALV	
10-14	**323659**	**1**	**STRAMMERULL KOMPL.**	**TENSION ROLLER ASSY**	
10	323662	1	ARM SV.	ARM	
11	402570	1	BØSSING Ø13X22-Ø24.8/4.5	BUSHING Ø13X22-Ø24.8/4.5	
12	402561	1	KJEDEHJUL 3/4" 16T M/LAGER	SPROCKET 3/4" 16T W/BEARING	
13	228577	1	BRIKKE Ø13.5-Ø35X5	WASHER Ø13.5-Ø35X5	
14	873540	1	SMØRENIPPEL M6 RETT	GREASE NIPPLE M6 STRAIGHT	
15	323664	1	HYLSE Ø21-Ø60X35	COLLAR Ø21-Ø60X35	
16	810901	1	6KT.SKR.HELGJ.M20X100-8.8 ELZN	HEX. BOLT THREADED.M20X100-8.8	
16	850170	1	SEKSKANTMUTTER M20-8 ELZN	HEX. NUT M20-8 GALV	
17	300336	1	STREKKFJØR Ø4-Ø31X165	TENSION SPRING Ø4-Ø31X165	
18	300337	1	KJETTING Ø5-22X220	CHAIN Ø5-22X220	
20-24	**323605**	**1**	**DRIVAKSEL TELEWEB KOMPL.**	**DRIVE ROLLER TELEWEB ASSY**	
20	323606	1	DRIVAKSEL TELEWEB SV.	DRIVE ROLLER	
21	303503	8	BELTEDREV GUMMI UNIVERSAL 27T	RUBBER DRIVE DISC ALL ROUND	
22	303185	8	KLEMPLATE	PLATE	
23	303186	12	HYLSE Ø12.4-Ø19X34	COLLAR Ø12.4-Ø19X34	
24	827655	12	SENKSKRUE M/6KT.HOL M12X55	COUNTERSUNK M12X55	
30	870145	4	KULELAGER SKF-FY35TF	BALL BREARING SKF-FY25TF	
31	323671	2	RULLEFESTE	BRACKET	
32	813640	12	SEKSKANTSKRUE M12X40-8.8 ELZN	HEX. BOLT M12X40-8.8 GALV	
33	813650	2	SEKSKANTSKRUE M12X50-8.8 ELZN	HEX. BOLT M12X50-8.8 GALV	
34	860163	28	BRIKKE Ø13-Ø24X2.5-8.8 ELZN	WASHER Ø13-Ø24X2.5 GALV	
35	852162	14	NYLOCKMUTTER M12 ELZN	NYLOCK NUT M12 GALV	
36	323770	1	HYLSE Ø36-Ø45X35	COLLAR Ø36-Ø45X35	
37	323612	1	KJEDEHJUL 1" 29T SV.	SPROCKET 1T 29T	
38	300390	1	KJEDEHJUL 1" 25T SV.	SPROCKET 1" 25T	
39	866455	2	SPENNHYLSE 8X55	TENSION PIN 8X55	
40	301144	2	STØTTERULL Ø90M/GUMMI KOMPL.	RUBBERCOATET SUPPORT ROLLER Ø90	
41	860166	6	BRIKKE Ø17-Ø30X3 ELZN	WASHER Ø17-Ø30X3 GALV	
42	852166	2	NYLOCKMUTTER M16 ELZN	NYLOCK NUT M16 GALV	
50-52	**323640**	**1**	**MIDTAKSEL KOMPL.**	**CENTRE DRIVE ROLLER ASSY**	
50	323641	1	MIDTAKSEL SV.	CENTRE DRIVE ROLLER	
51	301144	3	STØTTERULL Ø90 M/GUMMI KOMPL.	RUBBERCOATED SUPPORT ROLLER	
52	860166	9	BRIKKE Ø17-Ø30X3 ELZN.	WASHER Ø17-Ø30X3 GALV.	
53	852166	3	NYLOCKMUTTER M16 ELZN	NYLOCK NUT M16 GALV	
54	821540	4	LÅSESKRUE M10X40-4.6 ELZN	CARRIAGE BOLT M10X40-4.6 GALV	
54	860163	8	BRIKKE Ø13-Ø24X2.5 ELZN.	WASHER Ø13-Ø24X2.5 GALV	
54	852160	4	NYLIOCKMUTTER M10 ELZN.	NYLOCK NUT M10 GALV	
55-58	**323601**	**1**	**STRAMMERULL MONTERT**	**TENSION ROLLER ASSY**	
55	323602	1	BØSSING Ø16.5XØ40-34.9/10	COLLAR Ø16.5XØ40-34.9/10	
56	306095	1	KJEDEHJUL 1" 16T M/KULELAGER	SPROCKET 1" 16T W/BALL BEARING	
57	410336	1	BRIKKE Ø17-Ø43X12	WASHER Ø17-Ø43X12	
58	813870	1	SEKSKANTSKRUE M16X70-8.8 ELZN	HEX. BOLT M16X70-8.8 GALV	
58	860166	1	BRIKKE Ø17-Ø30X3 ELZN	WASHER Ø17-Ø30X3 GALV	
58	852155	1	NYLOCKMUTTER M16 ELZN	NYLOCK NUT M16 GALV	
60	300342	2	RISRULLANSLAG	HAULM ROLLER STOP KNOB	
61	300318	2	MUTTERPLATE	NUT PLATE	

Kverneland

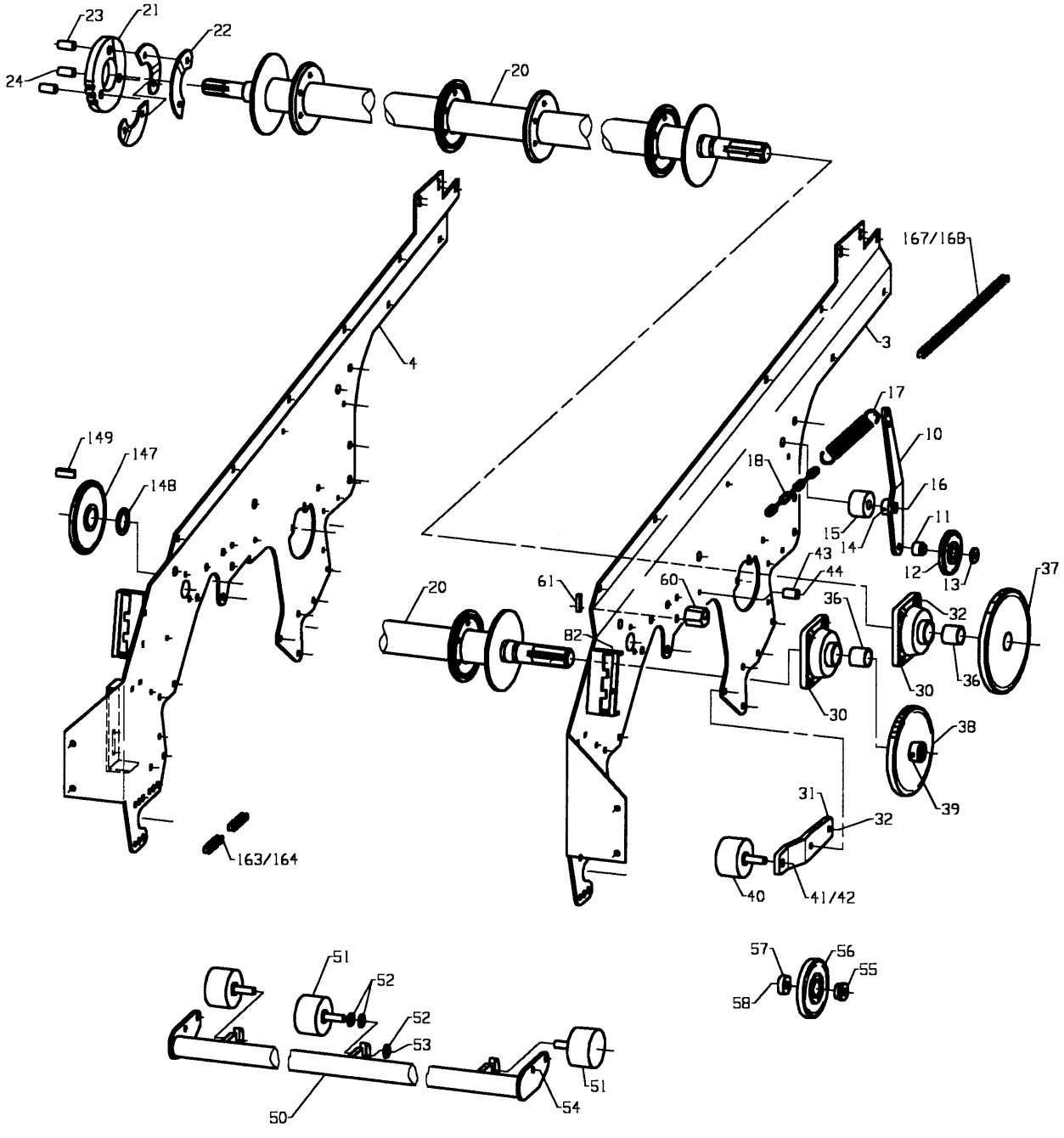

Fig. 57

Utgave: / Issue: 5	Redskap: / Implement: POTETHØSTER 2600 / POTATO HARVESTER 2600	Kverneland
Dato: / Date: 02-06	Enhet / Unit: DRIVVERK - TELEBELTE / DRIVE SHAFT - TELEWEB	Fig nr.: 57

Ref. No.	Delenr. Part no.	Ant. Qty.	Gjenstand	Description	Anmerkning Note
62	813870	2	SEKSKANTSKRUE M16X45-8.8 ELZN	HEX. BOLT M16X45-8.8 GALV	
62	860156	2	BRIKKE Ø6.6-Ø12X1.5 ELZN	WASHER Ø6.6-Ø12X1.5 GALV	
147	305831	1	KJEDEHJUL 3/4" 27T SV.	SPROCKET 3/4" 27T	
148	306116	1	BRIKKE Ø45.4-Ø63X4 M/SPOR	WASHER Ø45.4-Ø63X4	
149	305764	1	KILE A14X9X45	KEY A14X9X45	
150	300191	1	KJEDEHJUL 3/4" 27T SV.	SPROCKET 3/4" 27T	
151	866450	1	SPENNHYLSE 8X50	TENSION PIN 8X50	
152	228356	1	AVSTANDSRING FOR DRIVAKSEL	SPACER	
153	306118	1	BRIKKE Ø35.2-Ø45X4	WASHER Ø35.2-Ø45X4	
153	300349	1	KJEDEHJUL 3/4" 31T SV.	SPROCKET	
163	901857	1	RULLEKJEDE 3/4"X1962	CHAIN 3/4"X1962	
164	901802	1	RULLEKJEDELÅS 3/4"	CHAIN CONNECTOR 3/4"	
167	902027	1	RULLEKJEDE 1"X2565	CHAIN 1"X2565	
168	902002	1	RULLEKJEDELÅS 1"	CHAIN CONNECTOR 1"	

Kverneland

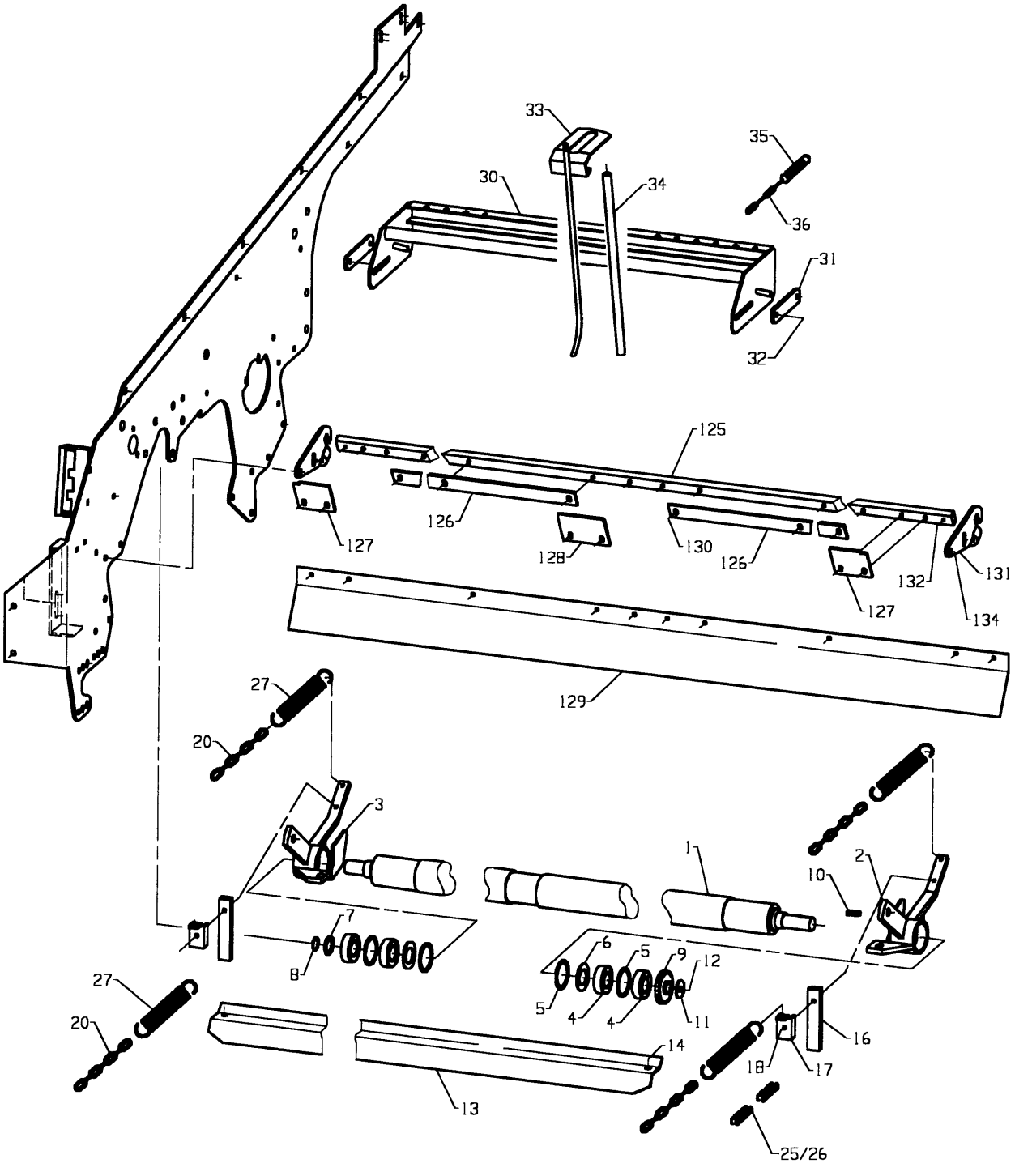

Fig. 58

Utgave: / Issue: 5	Redskap: / Implement: POTETHØSTER 2600 / POTATO HARVESTER 2600	Kverneland
Dato: / Date: 02-06	Enhet / Unit: RISRULLER - FALLDEMPER TELEBELTE / HAULM ROLLERS/FALLDAMPER TELEWEB	Fig nr.: 58

Ref. No.	Delenr. Part no.	Ant. Qty.	Gjenstand	Description	Anmerkning Note
1	305880	1	RISRULL M.GUMMI Ø74X1720	RUBBER COATED HAULM ROLLER	
2	305873	1	LAGERHUS V. SV.	BEARING BRACKET LH	
3	305874	1	LAGERHUS H. SV.	BEARING BRACKET RH	
4	870731	4	KULELAGER 6206-RS	BALL BEARING 6206-RS	
5	868562	4	LÅSERING INNV. I 62X2	CIRCLIP I62X2.00	
6	300189	2	BRIKKE Ø36-Ø61X2	WASHER Ø36-Ø61X2	
7	868606	1	STØTTERING 30X42X2.5	SUPPORT RING 30X42X2.5	
8	868430	1	LÅSERING UTV. A30X1.50	CIRCLIP A30X1.50	
9	300195	1	KJEDEHJUL 3/4" 11T-M/KON	SPROCKET 3/4" 11T	
10	300186	1	KILE 8X7X27.5	KEY	
11	228577	1	BRIKKE Ø13.5-ø35X5	WASHER Ø13-Ø40X2.5	
12	813620	1	SEKSKANTSKRUE M12X20-8.8 ELZN	HEX. BOLT M12X20-8.8 GALV.	
13	321903	1	AVSKRAPER	SCRAPER	
14	813630	2	SEKSKANTSKRUE M12X30-8.8 ELZN	HEX. BOLT M12X30-8.8 GALV.	
14	860163	4	BRIKKE Ø13-Ø24X2.5 ELZN	WASHER Ø13-Ø24X2.5	
14	850162	2	SEKSKANTMUTTER M12-8 ELZN.	HEX. NUT M12-8 GALV.	
15	873540	2	SMØRENIPPEL M6 RETT	GREASE NIPPLE M6 STRAIGHT	
16	303140	2	GUMMIDEMPER	RUBBER	
17	303145	2	FJØRFESTE	SPRING ATTACHMENT	
18	813440	2	SEKSKANTSKRUE M8X40-8.8 ELZN	HEX. BOLT M8X40-8.8 GALV.	
18	852158	2	NYLOCKMUTTER M8 ELZN.	NYLOCK NUT M8 GALV.	
20	300337	4	KJETTING Ø5-22X220	CHAIN Ø5-22X220	
21	867014	6	FJØRPINNE Ø4.0X75 ELZN	SPRING PIN Ø4.0X75 GALV	
25	901844	1	RULLEKJEDE 3/4"X1391	CHAIN 3/4"X1391	
26	901802	1	RULLEKJEDELÅS 3/4"	CHAIN CONNECTOR 3/4"	
27	300336	4	STREKKFJØR Ø4-Ø31X165	TENSION SPRING Ø4-Ø31X165	
30-36	**304872**	**2**	**RISLEDERSETT**	**HAULM GUIDE FRONT**	
30	305975	1	RISLEDERRAMME SV.	HAULM GUIDE FRONT	
31	300668	2	LASK 30X6-M10/20-8.8 ELZN.	BAR 30X6-M10/20-8.8	
32	813520	4	SEKSKANTSKRUE M10X20-8.8 ELZN	HEX. BOLT M10X20-8.8 GALV.	
32	860160	4	BRIKKE Ø10.5-Ø21X2	WASHER Ø10.5-Ø21X2	
33	300660	1	LEDESPIL SV.	HAULM GUIDE	
34	300665	1	GUMMISLANGE	RUBBER HOSE	
35	300666	1	STREKKFJØR Ø2.2-Ø17.8X76	TENSION SPRING Ø2.2-Ø17.8X76	
36	300667	1	KJETTING Ø3-26X104	CHAIN Ø3-26X104	
125	321785	1	AVSSKRAPERLIST	SCRAPER LIST	
126	321786	2	AVSKRAPERPLATE	SCRAPER PLATE	
127	321787	2	AVSKRAPERPLATE	SCRAPER PLATE	
128	321788	1	AVSKRAPERPLATE	SCRAPER PLATE	
129	321789	1	SKJERM	GUARD	
130	813435	12	SEKSKANTSKRUE M8X35-8.8 ELZN.	HEX. BOLT M8X35-8.8 GALV	
130	860158	12	BRIKKE Ø8.4-Ø17X1.6 ELZN	WASHER Ø8.4-Ø17X1.6 GALV	
130	860158	12	NYLOCKMUTTER M8 ELZN	NYLOCK NUT M8 GALV	
131	321773	2	AVSKRAPERFESTE SV.	SCRAPER BRACKET	
132	866326	2	SPENNHYLSE 6X26	TENSION PIN 6X26	
133	867061	2	RINGPINNE Ø12 (7/16") ELZN	RING PIN Ø12 (7/16") GALV.	
134	813631	4	SEKSKANTSKRUE M12X30-10.9 ELZN.	HEX. BOLT M12X30-10.9 GALV	
134	860163	4	BRIKKE Ø13-Ø24X2.5 ELZN	WASHER Ø12-Ø24X2.5 GALV	
134	852162	4	NYLOCKMUTTER M12 ELZN.	NYLOCK NUT M12 GALV	

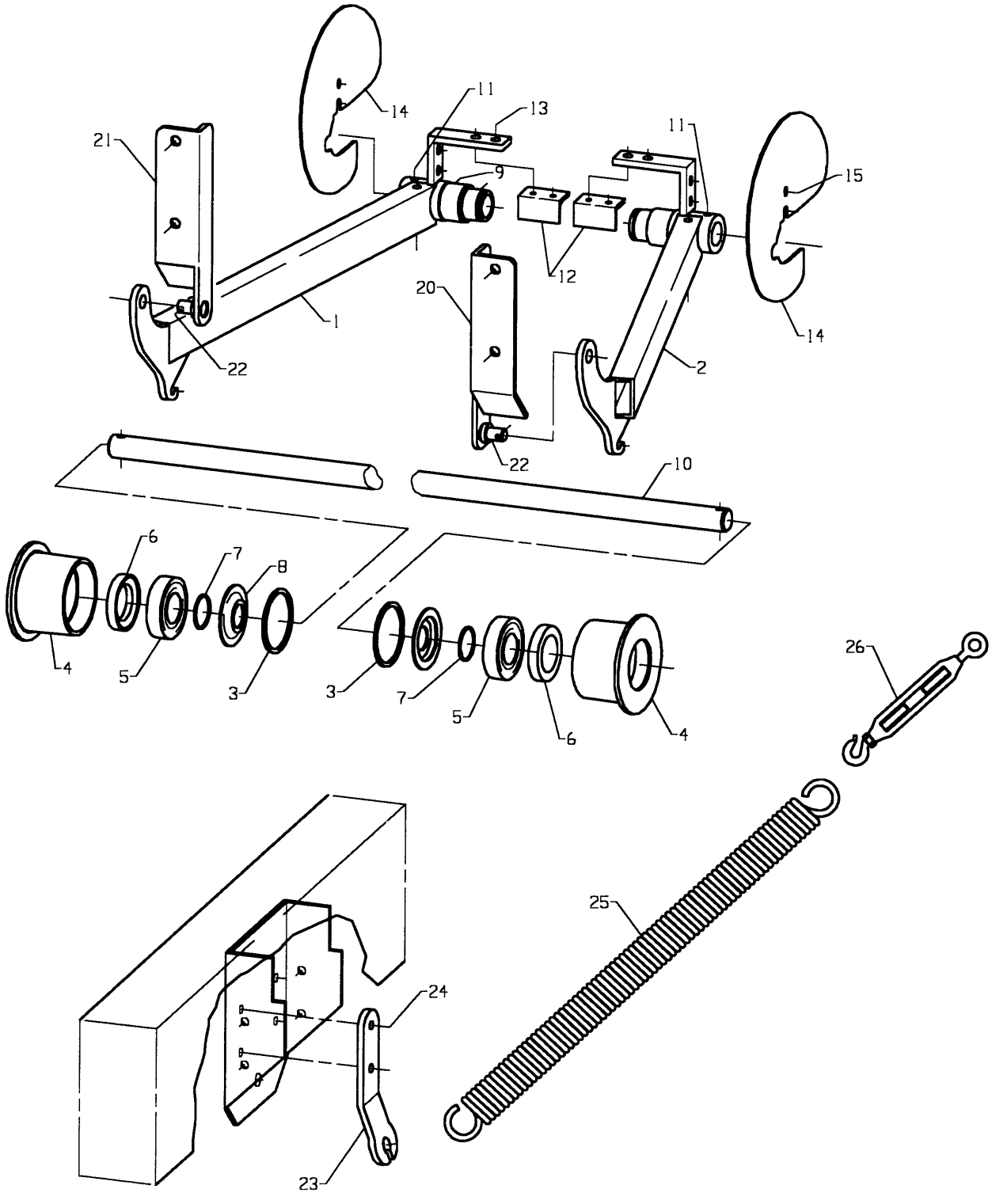

Fig. 59

Utgave: / Issue: 5	Redskap: / Implement: POTETHØSTER 2600 / POTATO HARVESTER 2600	Kverneland
Dato: / Date: 02-06	Enhet / Unit: NEDRE AKSEL / LOWER AXEL	Fig nr.: 59

Ref. No.	Delenr. Part no.	Ant. Qty.	Gjenstand	Description	Anmerkning Note
1-15	**323611**	**1**	**NEDRE AKSEL KOMPL.**	**LOWER AXLE ASSY**	
1	323620	1	LEDD V. SV.	LINK LEFT	
2	323621	1	LEDD H. SV.	LINK RIGHT	
3	868580	2	LÅSERING INNV. I 80X2.5	CIRCLIP I 80X2.5	
4	300402	2	RULL	ROLLER	
5	870740	2	KULELAGER 6208	BALL BEARING 6208	
6	871475	2	TETNINGSRING 4872/12 BASL	OIL SEAL 4872/12 BASL	
7	868440	2	LÅSERING UTV. A40X1.75	CIRCLIP A40X1.75	
8	301139	2	DEKSEL Ø79.5	COVER	
9	873540	2	SMØRENIPPEL M6 RETT	GREASE NIPPLE M6	
10	323624	1	AKSEL Ø30	AXEL Ø30	
11	813470	2	SEKSKANTSKRUE M8X70-8.8 ELZN	HEX. BOLT M8X70-8.8 GALV	
11	852158	2	NYLOCKMUTTER M8 ELZN	NYLOCK NUT M8 GALV	
12	323614	2	AVSKRAPER	SCRAPER	
13	813330	4	SEKSKANTSKRUE M6X30 8.8 ELZN	HEX. BOLT M6X30-8.8 GALV	
13	860155	8	BRIKKE Ø6.4-Ø18X1.5 ELZN	WASHER Ø6.4-Ø18X1.5 GALV	
13	852156	4	NYLOCKMUTTER M6 ELZN.	NYLOCK NUT M6 GALV	
14	323830	2	VERNEPLATE	GUARD	
15	813420	4	SEKSKANTSKRUE M8X20-8.8 ELZN	HEX. BOLT M8X20 8.8 GALV	
15	860158	4	BRIKKE Ø8.4-Ø17X1.6 ELZN	WASHER Ø8.4-Ø17X1.6 GALV	
15	852158	4	NYLOCKMUTTER M8 ELZN	NYLOCK NUT M8 GALV	
20	323616	1	LEDDFESTE V. SV.	BRACKET LEFT	
21	323617	1	LEDDFESTE H. SV.	BRACKET RIGHT	
22	865290	2	SPLINT 5X40 ELZN	SPLIT PIN 5X40 GALV	
23	323615	2	FJØRFESTE	SPRING BRACKET	
24	813640	4	SEKSKANTSKRUE M12X40-8.8 ELZN	HEX. BOLT M12X40-8.8 GALV	
24	860163	8	BRIKKE Ø13-Ø24X2.5 ELZN	WASHER Ø13-Ø24X2.5 GALV	
24	852162	4	NYLOCKMUTTER M12 ELZN	NYLOCK NUT M12 GALV	
25	323610	2	STREKKFJØR Ø8-Ø40X650	TENSION SPRING Ø8-Ø40X650	
26	323848	2	STREKKFISK M10-Ø15-Ø13X205+90	TURNBUCKLE	

Kverneland

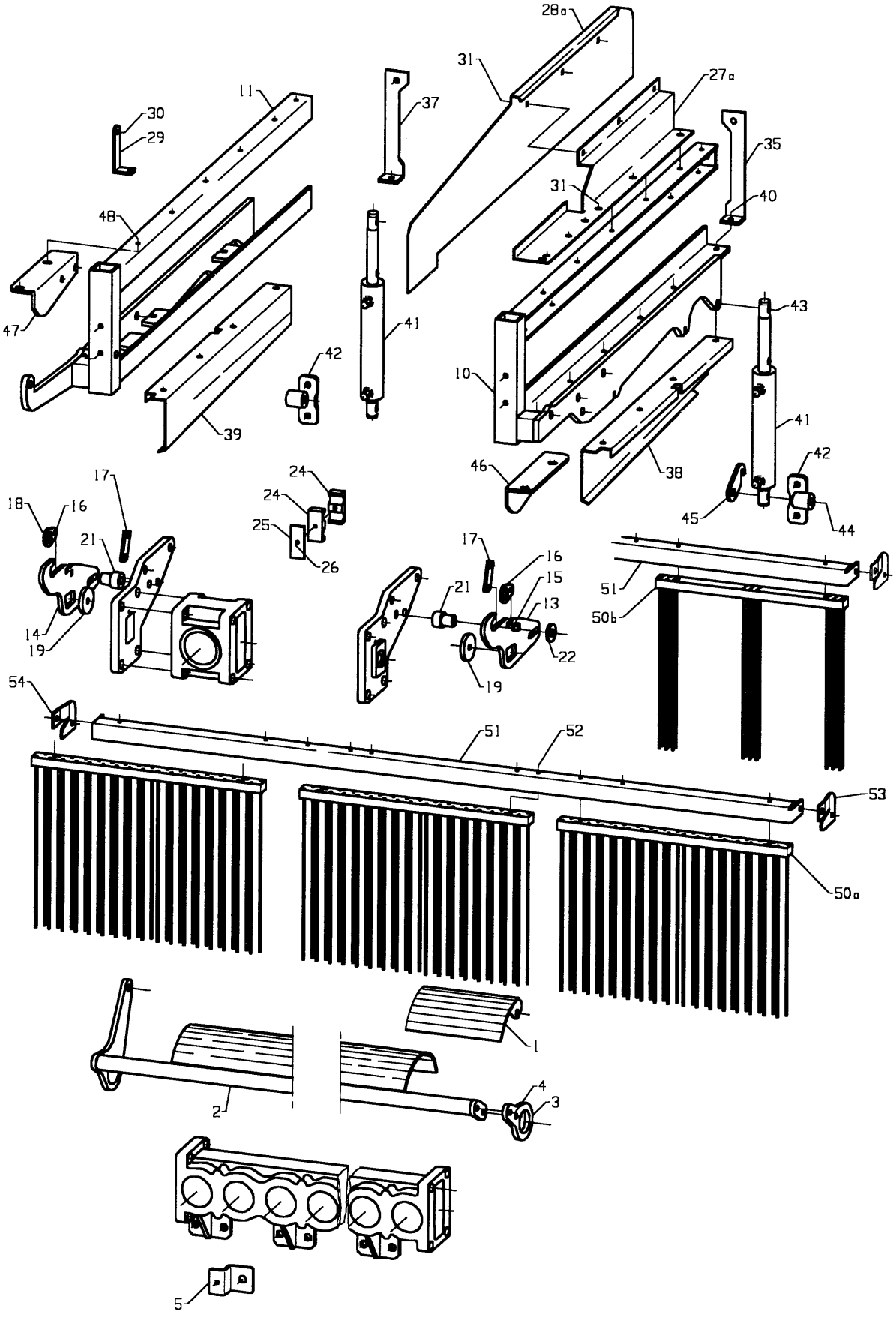

Fig. 60

Utgave: / Issue: 5	Redskap: / Implement: POTETHØSTER 2600 / POTATO HARVESTER 2600	Kverneland
Dato: / Date: 02-06	Enhet / Unit: AKSIALRULLER / AXIAL ROLLERS	Fig nr.: 60

Ref. No.	Delenr. Part no.	Ant. Qty.	Gjenstand	Description	Anmerkning Note
1-5	**323835**	**1**	**AKSIALRULLER M/RENSEDEKSEL MONT**	**AXIAL ROLLERS W/CLEANING GUARD**	
1	323758	1	GLIDEPLATE SV.	SLIDING PLATE	
2	323759	1	RENSEPLATE SV.	CLEANING PLATE	
3	323763	1	ØRE	EAR	
4	813625	2	SEKSKANTSKRUE M12X25-8.8 ELZN	HEX.BOLT M12X25-8.8 GALV	
4	852162	2	NYLOCKMUTTER M12 ELZN	NYLOCKMUTTER M12 GALV	
5	323842	4	FESTEVINKEL	BRACKET	
10	323676	1	BELTEFØRINGSRAMME V. SV.	WEB FRAME LEFT	
11	323677	1	BELTEFØRINGSRAMME H. SV.	WEB FRAME RIGHT	
12	813850	6	SEKSKANTSKRUE M16X50-8.8 ELZN	HEX. BOLT M16X50-8.8 GALV	
12	860166	12	BRIKKE Ø17-Ø30X3 ELZN	WASHER Ø17-Ø30X3 GALV	
12	852166	6	NYLOCKMUTTER M16 ELZN	NYLOCK NUT M16 GALV	
13	322004	1	VIPPEBRAKETT V. SV.	TILTING BRACKET LH	
14	322005	1	VIPPEBRAKETT H. SV.	TILTING BRACKET RH	
15	813660	2	SEKSKANTSKRUE M12X60-8.8 ELZN	HEX. BOLT M12X60-8.8 GALV	
16	322008	2	LÅSENØKKEL	LOCKING KEY	
17	324070	1	STAGFESTE	BRACKET	
18	813530	2	SEKSKANTSKRUE M10X30-8.8 ELZN	HEX. BOLT M10X30-8.8 GALV	
18	860160	2	BRIKKE Ø10.5-Ø21X2 ELZN	WASHER Ø10.5-Ø21X2 GALV	
18	852160	2	NYLOCKMUTTER M10 ELZN.	NYLOCK NUT M10 GALV	
19	440187	2	BRIKKE Ø13-Ø60X8 ELZN	WASHER Ø12-Ø60X8 GALV	
20	813860	4	SEKSKANTSKRUE M16X60-8.8 ELZN	HEX. BOLT M16X60-8.8 GALV	
20	860166	8	BRIKKE Ø17-Ø30X3 ELZN	WASHER Ø17-Ø30X3 GALV	
20	852166	4	NYLOCKMUTTER M16 ELZN	NYLOCK NUT M16 GALV	
21	322009	2	BOSS Ø16.5X41-Ø25/16	BOSS Ø16.5X41-Ø25/16	
22	300520	2	BRIKKE Ø17-Ø40X5 ELZN	WASHER Ø17-Ø40X5 GALV	
23	813900	2	SEKSKANTSKRUE M16X100-8.8 GALV	HEX. BOLT M16X100-8.8 GALV	
23	860166	2	BRIKKE Ø17-Ø30X3 ELZN	WASHER Ø17-Ø30X3 GALV	
23	852166	2	NYLOCKMUTTER M16 ELZN	NYLOCK NUT M16 GALV	
24	300877	8	RØRKLAMMERHALVDEL Ø22 DOBBEL	TUBE CLAMP HALF Ø22 DOUBLE	
25	300886	4	TOPPLATE 20-25 DOBBEL	TUBE CLAMP PLATE 20-25 DOUBLE	
26	813470	4	SEKSKANTSKRUE M8X70-8.8 ELZN	HEX. BOLT M8X70-8.8 GALV	
26	860158	8	BRIKKE Ø8.4-Ø17X1.6 ELZN	WASHER Ø8.4-Ø17X1.6 GALV	
26	852158	4	NYLOCKMUTTER M8 ELZN	NYLOCK NUT M8 GALV	
27a	323964	1	FESTEVINKEL V.	BRACKET LH	
27b	323965	1	FESTEVINKEL H.	BRACKET RH	
28a	323967	1	DEKKPLATE H.	COVER PLATE LH	
28b	323968	1	DEKKPLATE V.	COVER PLATE RH	
29	323784	1	HOLDER	HOLDER	
30	813420	6	SEKSKANTSKRUE M8X20-8.8 ELZN	HEX. BOLT M8X20-8.8 GALV	
30	860158	9	BRIKKE Ø8.4-Ø17X1.6 ELZN	WASHER Ø8.4-Ø17X1.6 GALV	
30	852158	6	NYLOCKMUTTER M8 ELZN	NYLOCK NUT M8 GALV	
31	821420	6	LÅSESKRUE M8X20-4.6 ELZN	CARRIAGE BOLT M8X20-4.6 GALV	
31	860158	9	BRIKKE Ø8.4-Ø17X1.6 ELZN	WASHER Ø8.4-Ø17X1.6 GALV	
31	852158	6	NYLOCKMUTTER M8 ELZN	NYLOCK NUT M8 GALV	
35	323685	1	STOPPER V.	STOPPER LEFT	
36	323686	1	STOPPER H.	STOPPER RIGHT	
37	813630	4	SEKSKANTSKRUE M12X30-8.8 ELZN	HEX. BOLT M12X30-8.8 GALV	
37	860163	8	BRIKKE Ø13-Ø24X2.5 ELZN	WASHER Ø12-Ø24X2.5 GALV	
37	852162	4	NYLOCKMUTTER M12 ELZN	NYLOCK NUT M12 GALV	
38	323698	1	LIST V.	LEFT LIST	
39	323699	1	LIST H.	RIGHT LIST	
40	813430	6	SEKSKANTSKRUE M8X30-8.8 ELZN	HEX. BOLT M8X30-8.8 GALV	
40	860158	12	BRIKKE Ø8.4-Ø17X1.6 ELZN	WASHER Ø8.4-Ø17X1.6 GALV	
40	852158	6	NYLOCKMUTTER M8 ELZN	NYLOCK NUT M8 GALV	
41	323843	2	SYLINDER M/SLAGBEGRENSER	CYLINDER W/LIMIT	
42	322028	2	SYLINDERFESTE SV.	CYLINDER PIVOT BRACKET	
43	813870	2	SEKSKANTSKRUE M16X70-8.8 ELZN	HEX. BOLT M16X70-8.8 GALV	
43	860166	7	BRIKKE Ø17-Ø30X3 ELZN	WASHER Ø17-Ø30X3 ELZN	
43	852166	2	NYLOCKMUTTER M16 ELZN	NYLOCK NUT M16 GALV	

Kverneland

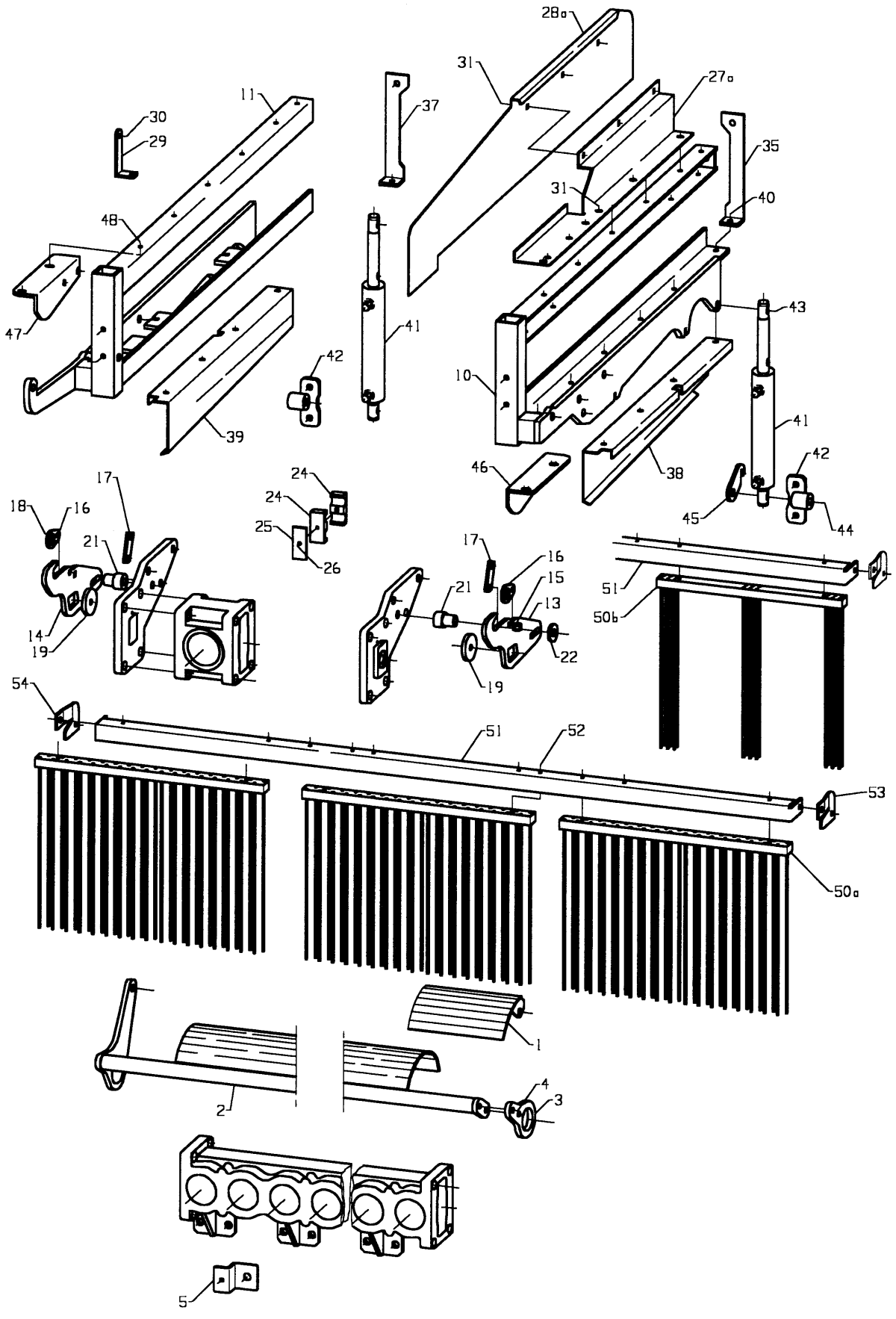

Fig. 60

Utgave: / Issue: 5	Redskap: / Implement: POTETHØSTER 2600 / POTATO HARVESTER 2600	Kverneland
Dato: / Date: 02-06	Enhet / Unit: AKSIALRULLER / AXIAL ROLLERS	Fig nr.: 60

Ref. No.	Delenr. Part no.	Ant. Qty.	Gjenstand	Description	Anmerkning Note
44	813880	2	SEKSKANTSKRUE M16X80-8.8 ELZN	HEX. BOLT M16X80-8.8 GALV	
44	860166	7	BRIKKE Ø17-Ø30X3 ELZN	WAHSER Ø17-Ø30X3 GALV	
44	852166	2	NYLOCKMUTTER M16 ELZN	NYLOCK NUT M16 GALV	
45	323714	2	FJØRFESTE FREMRE	SPRING BRACKET	
46	323668	1	FESTE FOR MIDTAKSEL V.	BRACKET FOR MIDDLE AXLE LEFT	
47	323669	1	FESTE FOR MIDTAKSEL H.	BRACKET FOR MIDDLE AXLE RIGHT	
48	813430	4	SEKSKANTSKRUE M8X30-8.8 ELZN	HEX. BOLT M8X30-8.8 GALV	
48	860158	8	BRIKKE Ø8.4-Ø17X1.6 ELZN	WASHER Ø8.4-Ø17X1.6 GALV	
48	852158	4	NYLOCKMUTTER M8 ELZN	NYLOCK NUT M8 GALV	
	323832		**BØRSTEGARDIN**	**BRUSH CURTAIN**	
50a	322090	3	BØRSTE 30X517X380-ø5	BRUSH 30X517X380-ø5	
50b	322089	3	BØRSTE 30X422X380-Ø5	BRUSH 30X422X380-Ø5	
51	323689	1	PROFIL	PROFILE	
52	813335	6	SEKSKANTSKRUE M6X30-8.8 ELZN	HEX. BOLT M6X30-8.8 GALV	
52	860156	12	BRIKKE Ø6.6-Ø12X1.5 ELZN	WASHER Ø6.6-Ø12X1.5 GALV	
52	852156	6	NYLOCKMUTTER M6 ELZN	NYLOCK NUT M6 GALV	
53	323828	1	FESTE FOR BØRSTEGARDIN V.	BRACKET FOR BRUSH CURTAIN LH.	
54	323829	1	FESTE FOR BØRSTEGARDIN H.	BRACKET FOR BRUSH CURTAIN RH.	
55	813525	6	SEKSKANTSKRUE M10X25-8.8 ELZN	HEX. BOLT M10X25-8.8 GALV	
55	860160	12	BRIKKE Ø10,5-Ø21X2 ELXN	WASHER Ø10,5-Ø21X2 GALV	
55	852160	6	NYLOCKMUTTER M10 ELZN	NYLOCK NUT M10 GALV	

Kverneland

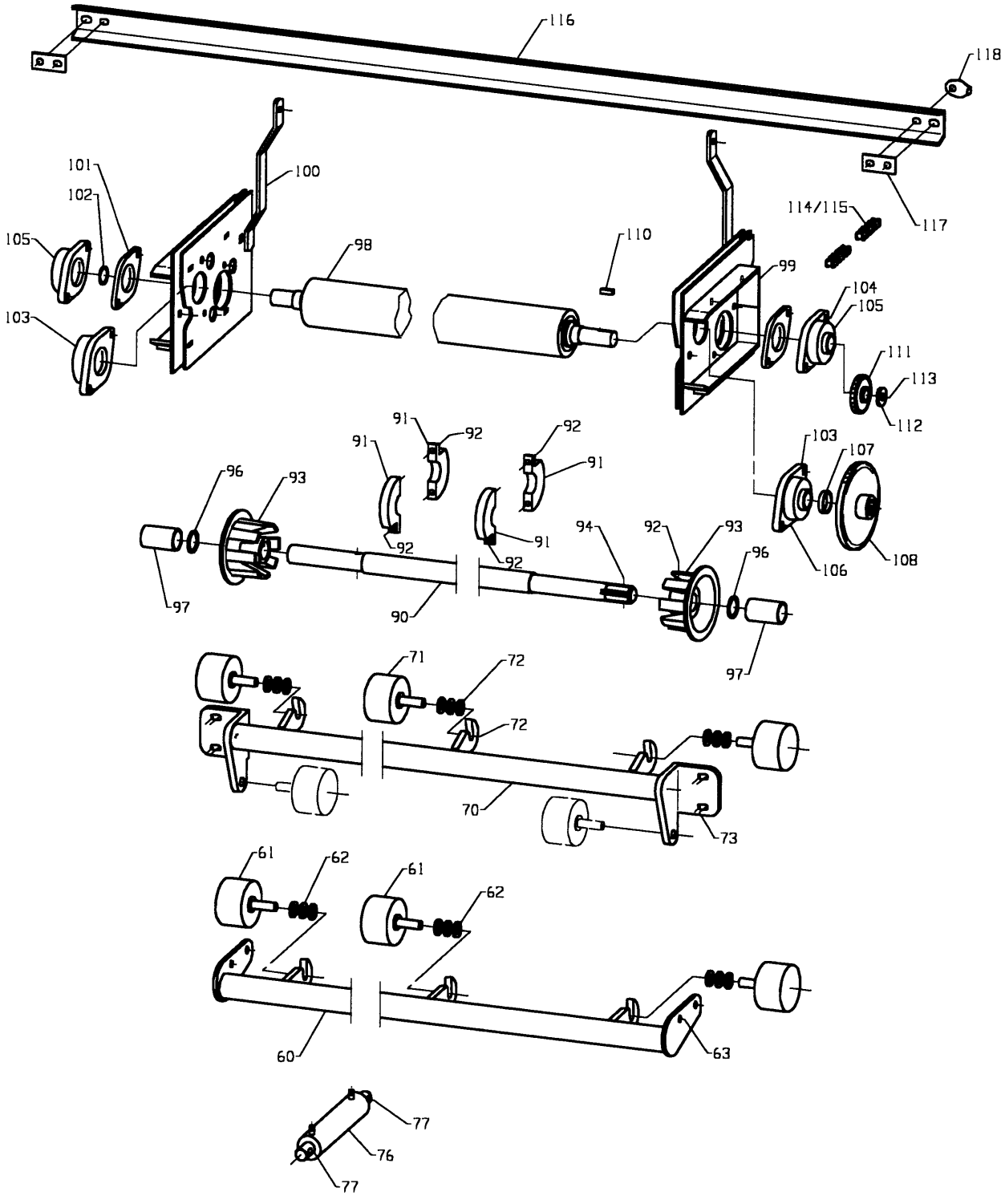

Fig. 61

Utgave: / Issue: 5	Redskap: / Implement: POTETHØSTER 2600 / POTATO HARVESTER 2600	Kverneland
Dato: / Date: 02-06	Enhet / Unit: AKSIALRULLER / AXIAL ROLLERS	Fig nr.: 61

Ref. No.	Delenr. Part no.	Ant. Qty.	Gjenstand	Description	Anmerkning Note
70-72	**323645**	**1**	**BÆREAKSEL KOMPL.**	**SUPPORT AXLE ASSY**	
70	323646	3	BÆREAKSEL SV.	SUPPORT AXLE	
71	301144	3	STØTTERULL Ø90 M/GUMMI KOMPL.	SUPPORT ROLLER Ø90 W/RUBBER	
72	860166	9	BRIKKE Ø17-Ø30X3 ELZN	WASHER Ø17-Ø30X3 GALV	
72	852166	3	NYLOCKMUTTER M16 ELZN	NYLOCK NUT M16 GALV	
75	813580	4	SEKSKANTSKRUE M10X80-8.8 ELZN	HEX. BOLT M10X80-8.8 GALV	
75	860160	8	BRIKKE Ø10.5-Ø21X2 ELZN	WASHER Ø10.5-Ø21X2 GALV	
75	852160	4	NYLOCKMUTTER M10 ELZN	NYLOCK NUT M10 GALV	
76	310089	1	SYLINDER DV Ø40/Ø25X300+180	CYLINDER DA Ø40/Ø24X200+180	
77	813870	2	SEKSKANTSKRUE M16X70-8.8 ELZN	HEX. BOLT M16X70-8.8 GALV	
77	860166	8	BRIKKE Ø17-Ø30X3 ELZN	WASHER Ø17-Ø30X3 GALV	
77	850166	2	NYLOCKMUTTER M16-8 ELZN	NYLOCK NUT M16-8 GALV	
90-94	**323628**	**1**	**VENDEASKEL KOMPL.**	**TURNAXLE ASSY**	
90	323629	1	VENDEASKEL	TURNAXLE	
91	323630	4	STØRTTERING HALVDEL	SUPPORT RING HALF	
92	825435	4	SYL.SKR. M/6KT. HOL M10X35-12.9	CYL. SCREW M10X35-12.9	
93	300404	2	BELTEDREV	BELT WHEEL	
94	866450	2	SPENNHYLSE 8X50	TENSION PIN 8X50	
96	868607	2	STØTTERING 35X45X2.5	SUPPORT RING 35X45X2.5	
97	304518	2	HYLSE Ø36-Ø42X62	COLLAR Ø36-Ø42X62	
98	323860	1	RULL Ø92 M/GUMMI	RUBBER ROLLER Ø92	
99	323952	1	GLIDER V. SV.	SLIDING UNIT LH	
100	323953	1	GLIDER H. SV.	SLIDING UNIT RH	
101	323749	2	AVSTANDSPLATE	SPACER	
102	868430	1	LÅSERING UTV. A30X1.50	CIRCLIP A30X1.50	
103	870146	2	KULELAGER SKF-FYTB35TF	BALL BEARING SKF-FYTB35TF	
104	813640	4	SEKSKANTSKRUE M12X40-8.8 ELZN	HEX. BOLT M12X40-8.8 GALV	
104	860163	8	BRIKKE Ø13-Ø24X2.5 ELZN	WASHER Ø13-Ø24X2.5 GALV	
104	852162	4	NYLOCKMUTTER M12 ELZN	NYLOCK NUT M12 GALV	
105	870144	2	KULELAGER SKF-FYTB30TF	BALL BEARING SKF-FYTB30TF	
106	813545	4	SEKSKANTSKRUE M10X45-8.8 ELZN	HEX. BOLT M10X45-8.8 GALV	
106	860160	8	BRIKKE Ø10.5-Ø21X2 ELZN	WASHER Ø10.5-Ø21X2 GALV	
106	852160	4	NYLOCKMUTTER M12 ELZN	NYLOCK NUT M12 GALV	
107	228356	1	AVSTANDSRING FOR DRIVAKSEL	SPACER	
108	300191	1	KJEDEHJUL 3/4" 27T SV.	SPROCKET 3/4" 27T	
109	866450	1	SPENNHYLSE 8X50	TENSION PIN 8X50	
110	323639	1	KILE 8X7X23.5	KEY 8X7X23.5	
111	300195	1	KJEDEHJUL 3/4" 11T-M/KON	SPROCKET 3/4" 11T	
112	228577	1	BRIKKE Ø13.5-Ø35X5	WASHER Ø13.5-Ø35X5	
113	813620	1	SEKSKANTSKRUE M12X20-8.8 ELZN	HEX. BOLT M12X20-8.8 GALV	
114	901815	1	RULLEKJEDE 3/4"X629	CHAIN 3/4"X629	
115	901802	1	RULLEKJEDELÅS 3/3"	CHAIN CONNECTOR 3/4"	
116	323960	1	AVSKRAPER	SCRAPER	TELEWEB
117	323962	4	SHIMS	SHIM	"
118	323961	2	LÅSEBRIKKE	LOCKING WASHER	"
119	813631	2	SEKSKANTSKRUE M12X30-10.9 ELZN	HEX. BOLT M12X30-8.8 GALV	"

Kverneland

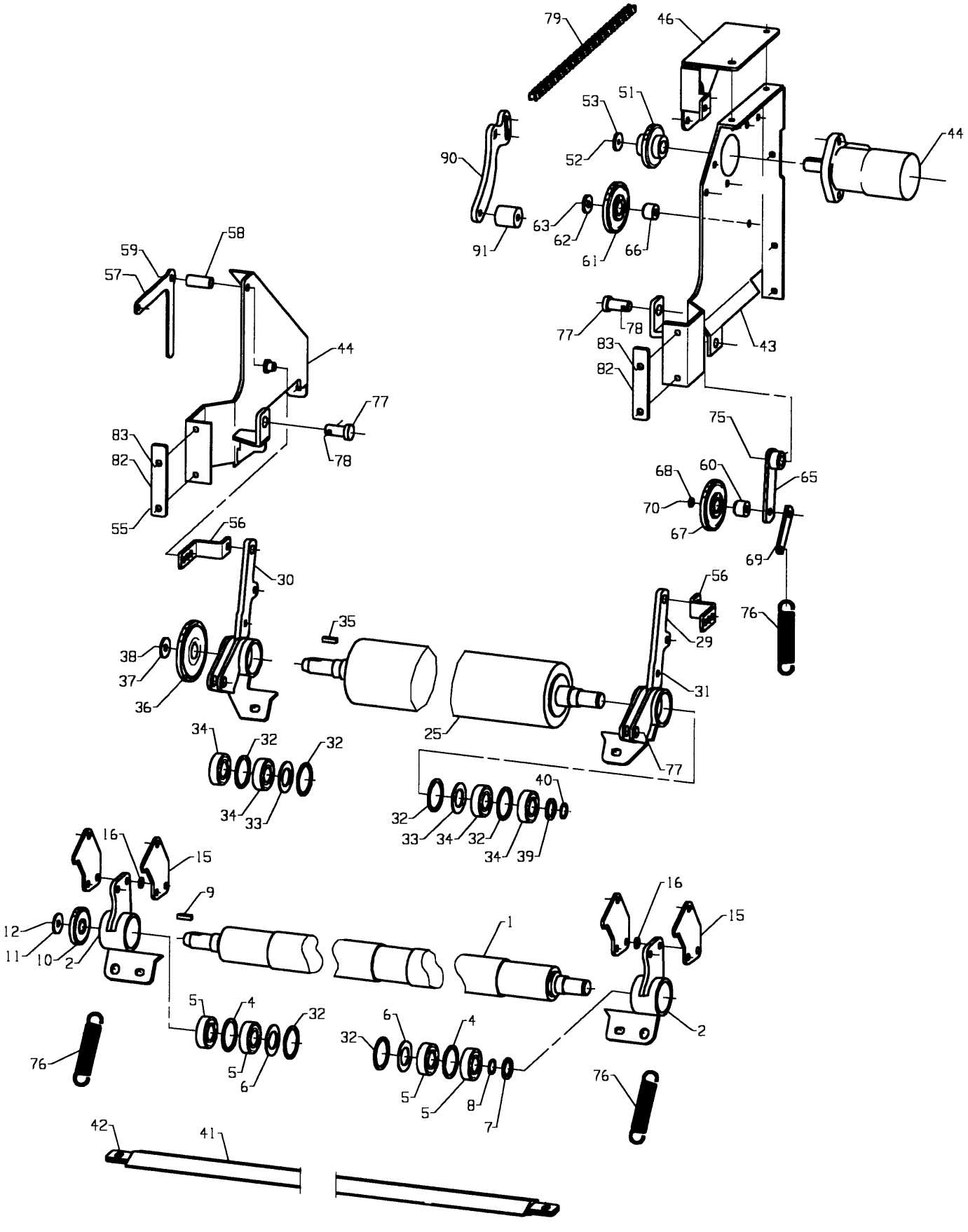

Fig. 62

Utgave: / Issue:	5	Redskap: / Implement:	POTETHØSTER 2600 / POTATO HARVESTER 2600	Kverneland
Dato: / Date:	02-06	Enhet / Unit	RISRULLENHET / HAULM ROLLER UNIT	Fig nr.: 62

Ref. No.	Delenr. Part no.	Ant. Qty.	Gjenstand	Description	Anmerkning Note
1-19	**323920**	**1**	**OVERFØRINGSRULL KOMPL.**	**TRANSFER ROLLER ASSY**	
1	305880	1	RISRULL M. GUMMI	ROLLER W. RUBBER	
2	323921	1	LAGERHUS V. SV.	BEARING HOUSING LEFT	
3	323922	1	LAGERHUS H. SV.	BEARING HOUSING RIGHT	
4	868562	4	LÅSERING INNV. I 62X2	CIRCLIP I 62X2	
5	870731	2	KULELAGER 6206-RS	BALL BEARING 6206-RS	
6	300189	2	BRIKKE Ø36-Ø61X2	WASHER Ø36-Ø61X2	
7	868606	1	STØTTERING 30X42X2.5	SUPPORT RING 30X42X2.5	
8	868430	1	LÅSERING UTV. A30X1.50	CIRCLIP A30X1.50	
9	300186	1	KILE 8X7X27.5	KEY 8X7X27.5	
10	300195	1	KJEDEHJUL 3/4" 11T-M/KON	SPROCKET 3/4" 11T-W/CONE	
11	228577	1	BRIKKE Ø13.5-Ø35X5	WASHER Ø13.5-Ø35X5	
12	813620	1	SEKSKANTSKRUE M12X40-8.8 ELZN	HEX. BOLT M12X20-8.8 GALV	
15	323940	2	VIPPEPLATE	PLATE	
14	813640	8	SEKSKANTSKRUE M10X40-8.8 ELZN	HEX. BOLT M10X40-8.8 GALV	
14	860163	16	BRIKKE Ø13-Ø24X2.5 ELZN	WASHER Ø13-Ø24X2.5 GALV	
14	852162	8	NYLOCKMUTTER M12 ELZN	NYLOCK NUT M12 GALV	
25-40	**323912**	**1**	**RULL M/GUMMI VULKET MONDTERT**	**ROLLER W/VULCANIZED RUBBER ASSY**	
25	323857	1	RULL Ø130 M/GUMMI VULKET	ROLLER Ø130 VULCANIZED	
29	323915	1	LAGERHUS V. SV.	BEARING HOUSING LH	
30	323916	1	LAGERHUS L. SV.	BEARING HOUSING RH	
31	866645	4	SPENNHYLSE 12X45	TENSION PIN 12X45	
32	868562	4	LÅSERING INNV. I 62X2	CIRCLIP I 62X2	
33	300189	2	BRIKKE Ø36-Ø61X2	WASHER Ø36-Ø61X2	
34	870731	4	KULELAGER 6206-RS	BALL BEARING 6206-RS	
35	300186	1	KILE 8X7X27.5	KEY 8X7X27.5	
36	323913	1	KJEDEHJUL 3/4" 19T M/KON	SPROCKET 3/4" 19T W/CONE	
37	228577	1	BRIKKE Ø13.5-Ø35X5	WASHER Ø13.5-Ø35X5	
38	813620	1	SEKSKANTSKRUE M12X20-8.8 ELZN	HEX. BOLT M12X20-8.8 ELZN	
39	868606	1	STØTTERING 30X42X2.5	SUPPORT RING 30X42X2.5	
40	868430	1	LÅSERING UTV. A30X1.50	CIRCLIP A30X1.50	
41	324151	2	AVSKRAPER SV.	SCRAPER	
42	813645	4	SEKSKANTSKRUE M12X45-8.8 ELZN	HEX. BOLT M12X45-8.8 GALV	
42	860163	8	BRIKKE Ø13-Ø24X2.5 ELZN	WASHER Ø13-Ø24X2.5 GALV	
42	852162	4	NYLOCKMUTTER M12 ELZN	NYLOCK NUT M12 GALV	
43	323902	1	SIDEPLATE V. SV.	LEFT PLATE	
44	323907	1	SIDEPLATE H. SV.	RIGHT PLATE	
45	813540	9	SEKSKANTSKRUE M10X40-8.8 ELZN	HEX. BOLT M10X40-8.8	
45	860160	18	BRIKKE Ø10.5-Ø21X2 ELZN	WASHER Ø10.5-Ø21X2 GALV	
45	852160	9	NYLOCKMUTTER M10 ELZN	NYLOCK NUT M10 GALV	
46	323906	1	FESTEPLATE	BRACKET	
47	813540	3	SEKSKANTSKRUE M10X40-8.8 ELZN	HEX. BOLT M10X40-8.8 GALV	
47	860160	6	BRIKKE Ø10.5-Ø21X2 ELZN	WASHER Ø10.5-Ø21X2 GALV	
47	852160	3	NYLOCKMUTTER M10 ELZN	NYLOCK NUT M10 GALV	
50	900507	1	OLJEMOTOR TRW MF761 130 Ø25 A	OIL MOTOR TRW MF761 130 Ø25 A	
*	900501		PAKN.SETT FOR TRW MF761 MOTOR	SEAL KIT FOR TRW MF761 MOTOR	
51	309129	1	KJEDEHJUL 3/4" 13T SV.	SPROCKET 3/4" 13T	
52	813420	1	SEKSKANTSKRUE M8X20-8.8 ELZN	HEX. BOLT M8X20-8.8 ELZN	
52	410141	1	BRIKKE Ø9-Ø35X4	WASHER Ø9-Ø35X4	
53	813640	2	SEKSKANTSKRUE M12X40-8.8 ELZN	HEX. BOLT M12X40-8.8 GALV	
53	860163	4	BRIKKE Ø13-Ø24X2.5 ELZN	WASHER Ø13-Ø24X2.5 GALV	
53	852162	2	NYLOCKMUTTER M12 ELZN	NYLOCK NUT M12 GALV	
55	335076	2	BØSSING Ø12.2X16.5-Ø16.7/11.5	COLLAR Ø12.2X16.5-Ø16.7/11.5	
56	323708	2	ARM	ARM	
57	323785	1	LENK ARM	LINK ARM	
58	312780	1	HYLSE Ø14.9-Ø21.3X46	SPACER Ø14.9-Ø21.3X46	
59	810690	1	6.KT SKR.HELGJ.M12X90-8.8 ELZN	HEX. BOLT THR. M12X90-8.8 GALV	
59	860163	3	BRIKKE Ø13-Ø24X2.5 ELZN	WASHER Ø12-Ø24X2.5 GALV	
59	850112	1	SEKSKANTMUTTER M12-8 SORT	NYLOCK NUT M12-8 BLACK	

Kverneland

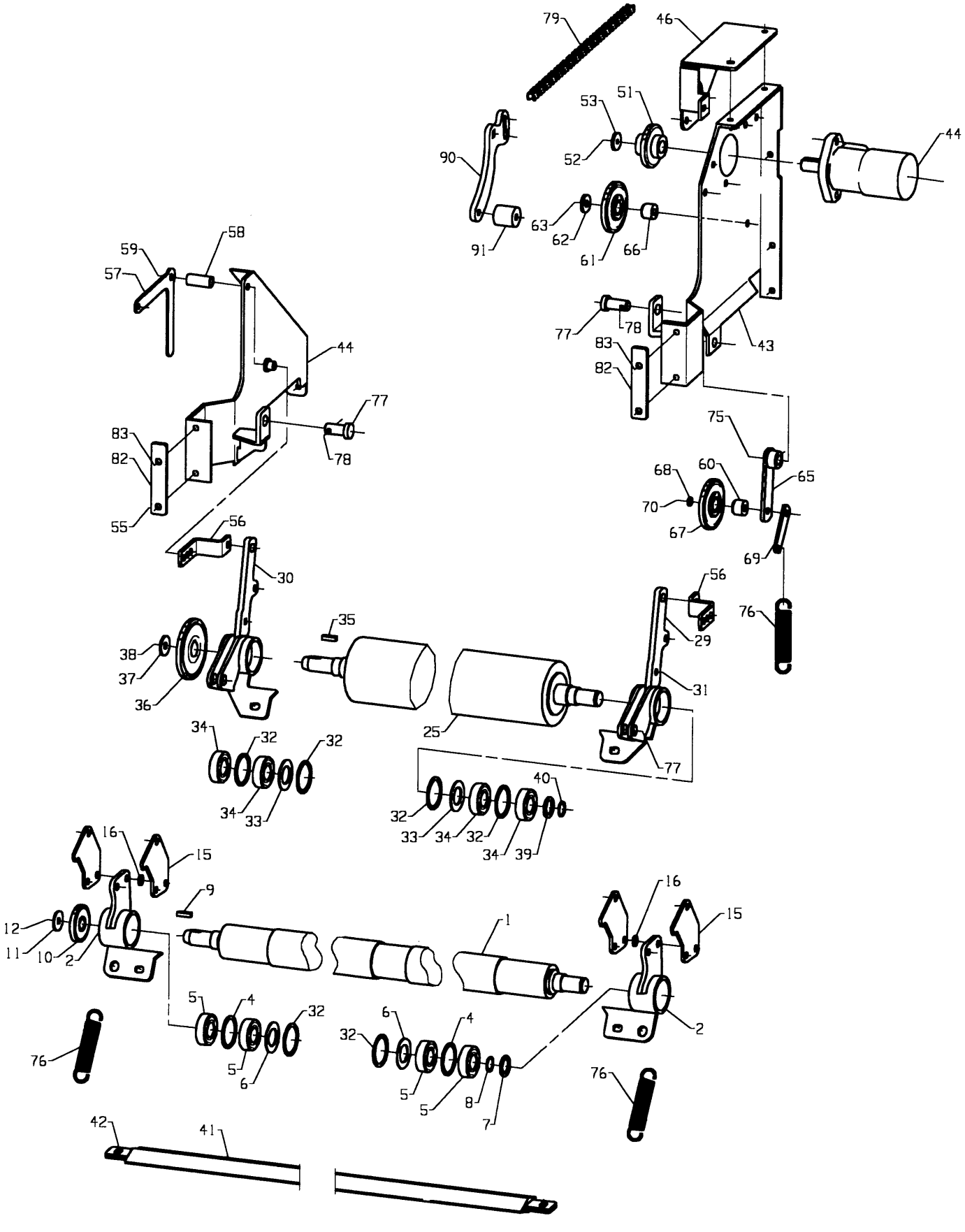

Fig. 62

Utgave: / Issue:	5	Redskap: / Implement:	POTETHØSTER 2600 POTATO HARVESTER 2600	Kverneland
Dato: / Date:	02-06	Enhet / Unit	RISRULLENHET HAULM ROLLER UNIT	Fig nr.: 62

Ref. No.	Delenr. Part no.	Ant. Qty.	Gjenstand	Description	Anmerkning Note
59	852162	1	NYLOCKMUTTER M12 ELZN	NYLOCK NUT M12 GALV	
60	402570	1	BØSSING Ø13X22-Ø24.8/4.5	BUSHING Ø13X22-Ø24.8/4.5	
61	303728	1	KJEDEHJUL 3/4" 13T. M/LAGER	SPROCKET 3/4" 13T W/BEARING	
62	228577	1	BRIKKE Ø13.5-Ø35X5	WASHER Ø13.5-Ø35X5	
63	813670	1	SEKSKANTSKRUE M12X70-8.8 ELZN	HEX. BOLT M12X70-8.8 GALV	
63	860163	1	BRIKKE Ø13-Ø24X2.5 ELZN	WASHER Ø13-Ø24X2.5 GALV	
63	852162	1	NYLOCKMUTTER Ø13-Ø24X2.5 ELZN	NYLOCK NUT Ø13-Ø24X2.5 GALV	
65-70	**321890**	**1**	**STRAMMEARM KOMPL.**	**TENSION ARM ASSY**	
65	300322	1	ARM SV.	ARM	
66	402570	1	BØSSING Ø13X22-Ø24.8/4.5	BUSHING Ø12X22-Ø24.8/4.5	
67	402561	1	KJEDEHJUL 3/4" 16T M/LAGER	SPROCKET 3/4" 16T W/BEARING	
68	228577	1	BRIKKE Ø13.5-35X5	WASHER Ø13.5-Ø35X5	
69	321848	1	LASK 32X5-Ø13/70/8X15	PLATE 32X5-Ø13/70/8X15	
70	813665	1	SEKSKANTSKRUE M12X65-8.8 ELZN	HEX BOLT M12X65-8.8 GALV	
70	852162	1	NYLOCKMUTTER M12 ELZN	NYLOCK NUT M12 GALV	
75	814040	1	SEKSKANTSKRUE M20X40-8.8 ELZN	HEX. BOLT M20X40-8.8 GALV	
75	860170	1	BRIKKE Ø21-Ø37X3 ELZN	WASHER Ø21-Ø37X3 GALV	
76	334540	3	STREKKFJØR Ø4-Ø26X140	TENSION SPRING Ø4-Ø26X140	
77	335320	2	BOLT M/HODE	BOLT W/HEAD	
78	867053	2	RINGPINNE Ø5	RING PIN ø5	
79a	901845	1	RULLEKJEDE 3/4"X1543	CHAIN 3/4"X1543	
79b	901802	1	RULLEKJEDELÅS 3/4"	CHAIN CONNECTOR 3/4"	
80	323722	1	KJEDESKJERM	GAURD	
81	813425	2	SEKSKANTSKRUE M8X25-8.8 ELZN	HEX. BOLT M8X25-8.8 GALV	
81	860158	4	BRIKKE Ø8.4-Ø17X1.6 ELZN	WASHER Ø8.4-Ø17X1.6 GALV	
81	852158	2	NYLOCKMUTTER M8 ELZN	NYLOCK NUT M8 GALV	
82	323744	4	MELLOMSTYKKE	SPACER	
83	813635	8	SEKSKANTSKRUE M12X35-8.8 ELZN	HEX. BOLT M12X35-8.8 GALV	
83	852162	16	BRIKKE Ø13-Ø24X2.5 ELZN	WASHER Ø13-Ø24X2.5 GALV	
83	852162	8	NYLOCKMUTTER M12 ELZN	NYLOCK NUT M12 GALV	
90	323938	1	ARM	ARM	
91	323939	1	RULL	CHAIN LEADER	

Kverneland

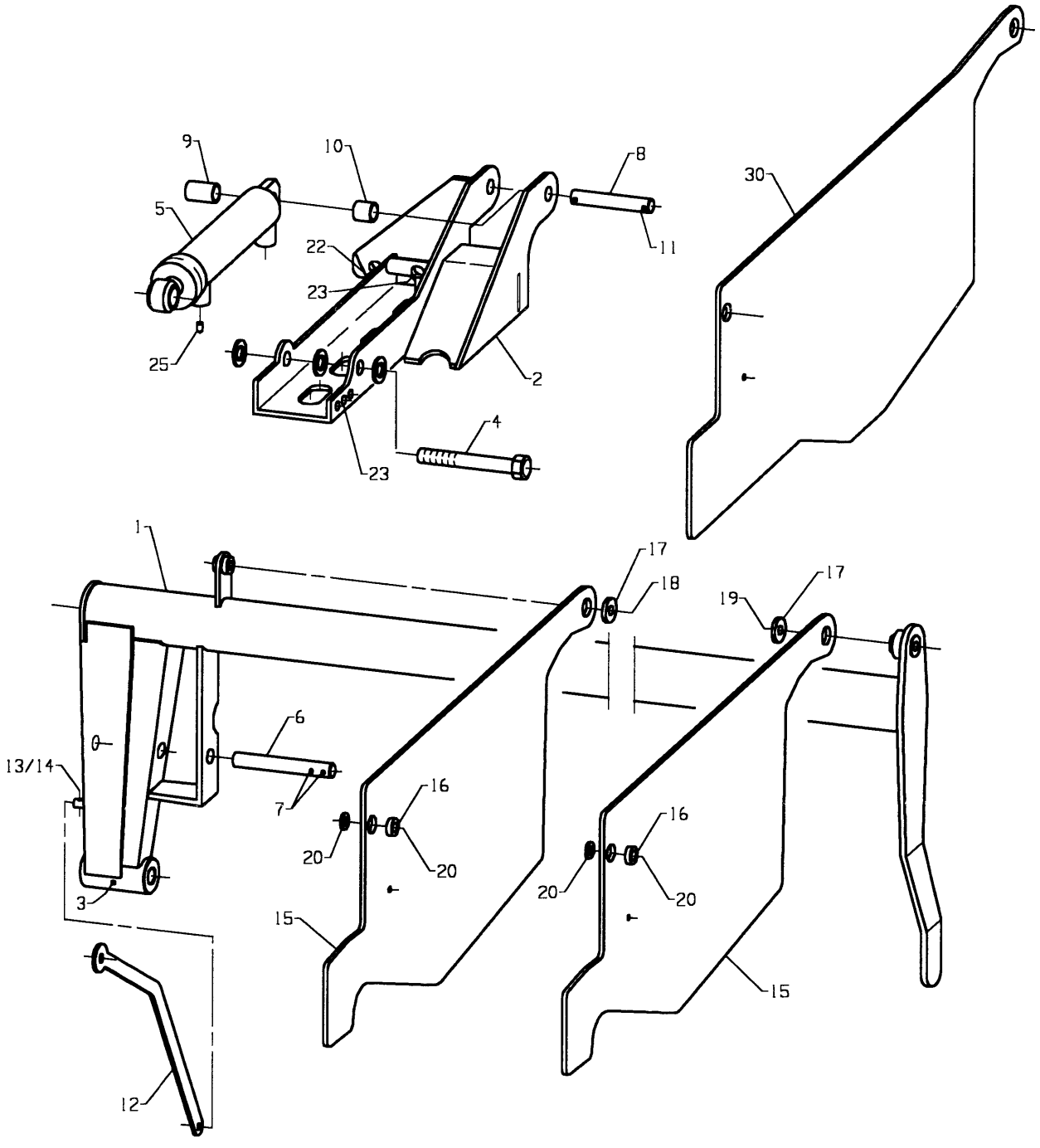

Fig. 63

Utgave: / Issue: 5	Redskap: / Implement: POTETHØSTER 2600 / POTATO HARVESTER 2600	Kverneland
Dato: / Date: 02-06	Enhet / Unit: BELTETREKKER / WEB DRAW	Fig nr.: 63

Ref. No.	Delenr. Part no.	Ant. Qty.	Gjenstand	Description	Anmerkning Note
1	323729	1	TREKKBØYLE	DRAW BOW	
2	323738	1	BRAKETT SV.	BRACKET	
3	873540	1	SMØRENIPPEL M6 RETT	GREASE NIPPLE M6	
4	814105	1	SEKSKANTSKRUE M20X150-8.8 ELZN	HEX. BOLT M20X1850-8.8 GALV	
4	860170	3	BRIKKE Ø21-Ø37X3 ELZN	WASHER Ø21-Ø37X3 GALV	
4	852167	1	NYLOCKMUTTER M20 ELZN	NYLOCK NUT M20 GALV	
5	217781	1	SYLINDER DV Ø50/Ø28X400+215	CYLINDER DA Ø50/Ø28X400+215	
*	300828		SYL. PAKN. SETT Ø50/Ø28	CYLINDER SEAL KIT Ø50/Ø28	
6	323737	1	AKSEL Ø20X190-Ø6/10	AXEL Ø20X190-Ø6/10	
7	866340	2	SPENNHYLSE 6X40	TENSION PIN 6X40	
8	323743	1	AKSEL Ø20X112-Ø6/7	AXEL Ø20X112-Ø6/7	
9	323727	1	HYLSE Ø21.7-Ø26.9X38	BUSHING Ø21.7-Ø26.9X38	
10	323726	1	HYLSE Ø21.7-Ø26.9X24	BUSHING Ø21.7-Ø26.9X24	
11	866340	2	SPENNHYLSE 6X40	TENSION PIN 6X40	
12	323786	1	LENK	LINKAGE	
13	860163	2	BRIKKE Ø13-Ø24X2.5 ELZN	WASHER Ø13-Ø24X2.5 GALV	
14	865275	1	SPLINT 5X25 ELZN	SPLIT PIN 5X25 GALV	
15	323746	2	TREKKJERN HELDEKKING	PULLPLATE FULLCOVER	
16	323747	2	HYLSE Ø14-Ø25X7.5	CASING Ø14-Ø25X7.5	
17	228577	2	BRIKKE Ø13.5-Ø35X5	WASHER Ø13.5XØ35X5	
18	813640	1	SEKSKANTSKRUE M12X40-8.8 ELZN	HEX. BOLT M12X40-8.8 GALV	
18	860163	2	BRIKKE Ø13-Ø24X2.5 ELZN	WASHER Ø13-Ø24X2.5 GALV	
18	852162	1	NYLOCKMUTTER M12 ELZN	NYLOCK NUT M12 GALV	
19	813650	1	SEKSKANTSKRUE M12X50-8.8 ELZN	HEX. BOLT M12X50-8.8 GALV	
19	860163	2	BRIKKE Ø13-Ø24X2.5 ELZN	WASHER Ø13-Ø24X2.5 GALV	
19	852162	1	NYLOCKMUTTER M12 ELZN	NYLOCK NUT M12 GALV	
20	821640	2	LÅSESKRUE M12X40-4.6 ELZN	CARRIAGE BOLT M12X40-4.6 GALV	
20	860163	4	BRIKKE Ø13-Ø24X2.5 ELZN	WASHER Ø13-Ø24X2.5 GALV	
20	852162	2	NYLOCKMUTTER M12 ELZN	NYLOCK NUT M12 GALV	
22	813905	1	SEKSKANTSKRUE M16X150-8.8 ELZN	HEX. BOLT M16X150 GALV	
22	860166	2	BRIKKE Ø17-Ø30X3 ELZN	WASHER Ø17-Ø30X3 GALV	
22	852166	1	NYLOCKMUTTER M16 ELZN	NYLOCK NUT M16 GALV	
23	813850	1	SEKSKANTSKRUE M16X50-8.8 ELZN	HEX. BOLT M16X50-8.8 GALV	
23	860166	2	BRIKKE Ø17-Ø30X3 ELZN	WASHER Ø17-Ø30X3 GALV	
23	852166	1	NYLOCK MUTTER M16 ELZN	NYLOCK NUT M16 GALV	
24	813620	2	SEKSKANTSKRUE M12X20-8.8 ELZN	HEX. BOLT M12X20-8.8 GALV	
24	860163	4	BRIKKE Ø13-Ø24X2.5 ELZN	WASHER Ø13-Ø24X2.5 GALV	
24	852162	2	NYLOCKMUTTER M12 ELZN	NYLOCK NUT M12 GALV	
25	313750	1	STRUPENIPPEL M8-Ø0.8	RESTRICTOR M8-Ø0.8	
	323811		**SETT FOR HALVDEKKING TELEBELTE**	**KIT FOR HALFCOVER TELEWEB**	
30	323745	1	TREKKJERN	PULLPLATE	

Kverneland

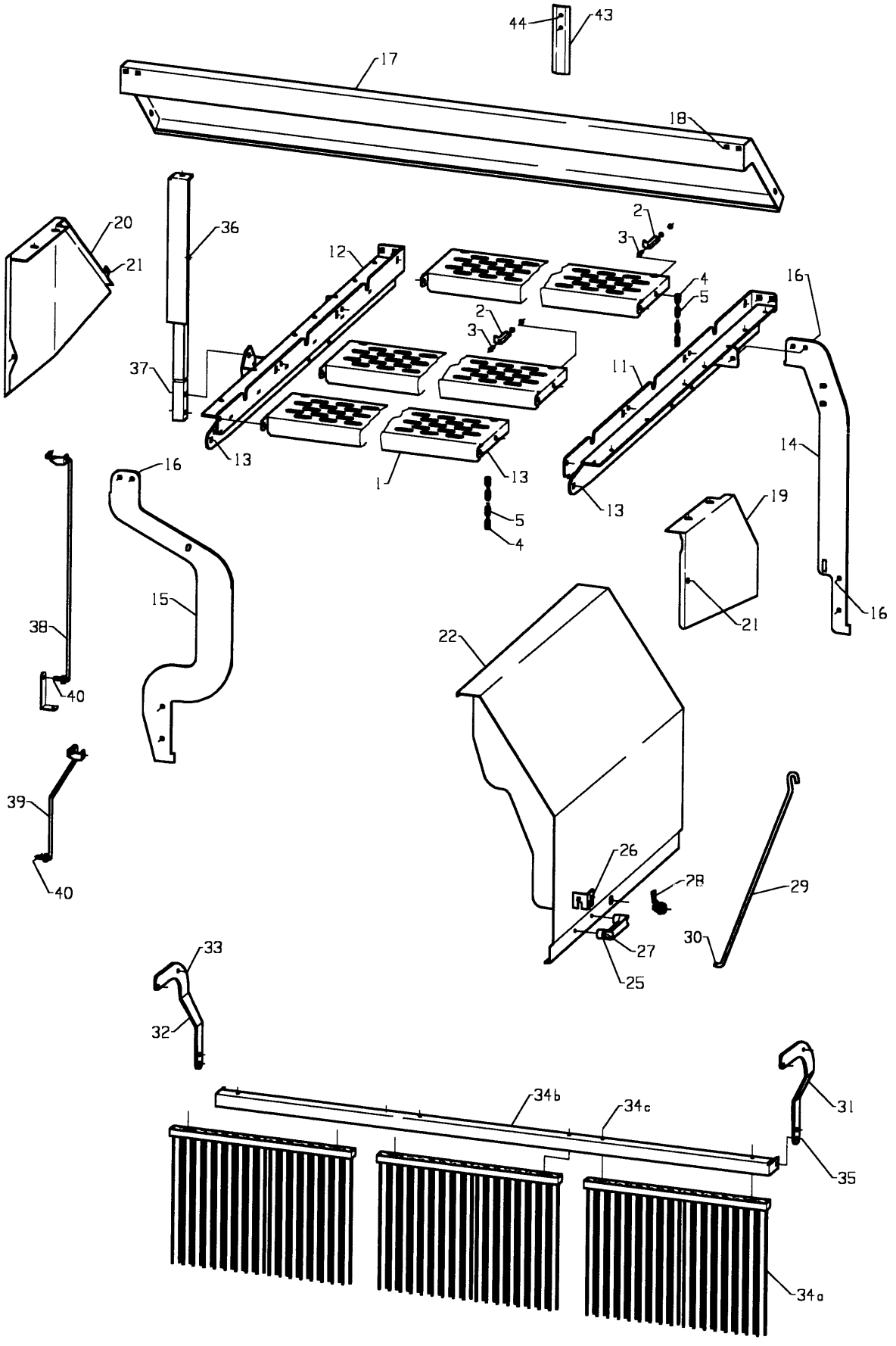

Fig. 64

Utgave: / Issue: 5	Redskap: / Implement: POTETHØSTER 2600 / POTATO HARVESTER 2600	Kverneland
Dato: / Date: 02-06	Enhet / Unit VERNESKJERM / PROTECTION GUARD	Fig nr.: 64

Ref. No.	Delenr. Part no.	Ant. Qty.	Gjenstand	Description	Anmerkning Note
			VERNEPLATE M.LÅS	**FORWARD PROT. PLATE**	
1	306333	1	VERNEPLATE FRAMRE	FORWARD PROT. PLATE	
2	303172	2	LÅS	LOCK	
3	813320	2	SEKSKANTSKRUE M6X20-8.8 ELZN	HEX. BOLT M6X20-8.8 GALV	
3	860156	2	BRIKKE Ø6.6-Ø12X1.5 ELZN	WASHER Ø6.6-Ø12X1.5 GALV	
3	850156	4	SEKSKANTMUTTER M6-8 ELZN.	HEX. NUT M6-8 GALV	
4	813320	4	SEKSKANTSKRUE M6X20-8.8 ELZN	HEX. BOLT M6X20-8.8 GALV	
4	850156	4	SEKSKANTMUTTER M6-8 ELZN	HEX. NUT M6-8 GALV	
4	852156	4	NYLOCKMUTTER M6 ELZN	NYLOCK NUT M6 GALV	
5	226147	2	KJETTING Ø4-19X99	CHAIN Ø4-19X399	
10	813525	6	SEKSKANTSKRUE M10X25-8.8 ELZN	HEX. BOLT M10X25-8.8	
10	860160	12	BRIKKE Ø10.5-Ø21X2 ELZN	WASHER Ø10.5-Ø21X2 GALV	
10	852160	6	NYLOCKMUTTER M10 ELZN	NYLOCK NUT M10 GALV	
11	323795	1	FESTE SV. V.	BRACKET LH	
12	323796	1	FESTE SV. H.	BRACKET RH	
13	821525	2	LÅSESKRUE M10X25-4.6 ELZN	CARRIAGE BOLT M10X25-4.6 GALV	
13	860160	2	BRIKKE Ø10,5-Ø21X2 ELZN	WASHER Ø10,5-Ø21X2 GALV	
13	852160	2	NYLOCKMUTTER M10 ELZN	NYLOCK NUT M10 GALV	
14	323791	1	STØTTE VENSTRE	SUPPORT LEFT	
15	323792	1	STØTTE HØYRE	SUPPORT RIGHT	
16	813535	8	SEKSKANTSKRUE M10X35-8.8 ELZN	HEX. BOLT M10X35-8.8 GALV	
16	860160	16	BRIKKE Ø10,5-Ø21X2 ELZN	WASHER Ø10,5-Ø21X2 ELZN	
16	852160	8	NYLOCKMUTTER M10 ELZN	NYLOCK NUT M10 GALV	
17	323800	1	VERNEPLATE	PLATE	
18	821525	4	LÅSESKRUE M10X25-4.6 ELZN.	CARRIAGE BOLT M10X25-4.6 GALV	
18	860160	4	BRIKKE Ø10.5-Ø21X2 ELZN	WASHER Ø10,5-Ø21X2 GALV	
18	852160	4	NYLOCKMUTTER M10 ELZN	NYLOCK NUT M10 GALV	
19	323803	1	DEKSEL	COVER	
20	323804	1	DEKSEL H	COVER RIGHT	
21	813420	8	SEKSKANTSKRUE M8X20-8.8 ELZN	HEX. BOLT M8X20-8.8 GALV	
21	860158	16	BRIKKE Ø8.4-Ø17X1.6 ELZN	WASHER Ø8.4-Ø17X1.6 GALV	
21	852158	8	NYLOCKMUTTER M8 ELZN	NYLOCK NUT M8 GALV	
22	323806	1	SKJERM V. SV.	GUARD LEFT	
23	813420	2	SEKSKANTSKRUE M8X20-8.8 ELZN	HEX. BOLT M8X20-8.8 GALV	
23	860158	4	BRIKKE Ø8.4-Ø17X1.6 ELZN	WASHER Ø8.4-Ø17X1.6 GALV	
23	852158	2	NYLOCKMUTTER M8 ELZN	NYLOCK NUT M8 GALV	
25	215875	1	HÅNDTAK	GRIP	
26	322493	1	STAGFESTE	STAY BRACKET	
27	813425	2	SEKSKANTSKRUE M8X25-8.8 ELZN	HEX. BOLT M8X25-8.8 GALV	
27	860158	2	BRIKKE Ø8.4-Ø17X1.6 ELZN	WASHER Ø8.4-Ø17X1.6 GALV	
27	852158	2	NYLOCKMUTTER M8 ELZN	NYLOCK NUT M8 GALV	
28	306202	1	HAKELÅS KOMPL.	LOCK ASSY	
29	322492	1	SKJERMSTAG	STAY	
30	865220	1	SPLINT 4X20 ELZN	SPLIT PIN 4X20 GALV	
31	323846	1	GARDINHOLDER V.	CURTAIN HOLDER LEFT	
32	323847	1	GARDINHOLDER H.	CURTAIN HOLDER RIGHT	
33	813425	4	SEKSKANTSKRUE M8X25-8.8 ELZN	HEX. BOLT M8X25-8.8 GALV	
33	860158	8	BRIKKE Ø8.4-Ø17X1.6 ELZN	WASHER Ø8.4-Ø17X1.6 GALV	
33	852158	4	NYLOCKMUTTER M8 ELZN	NYLOCK NUT M8 GALV	
34a-34c	**323834**	**1**	**BØRSTEGARDIN**	**BRUSH CURTAIN**	
34a	322090	3	BØRSTE 30X517x380-ø5	BRUSH 30X517X380-ø5	
34b	323689	1	PROFIL	PROFILE	
34C	813335	6	SEKSKANTSKRUE M6X35-8.8 ELZN	HEX. BOLT M6X25-8.8 GALV	
34c	860156	12	BRIKKE Ø6.6-Ø12X1.5 ELZN	WASHER Ø6.6-Ø12X1.5 GALV	
34c	852156	6	NYLOCKMUTTER M6 ELZN	NYLOCK NUT M6 GALV	
35	813525	2	SEKSKANTSKRUE M10X25-8.8 ELZN	HEX. BOLT M10X25-8.8 GALV	
35	860160	4	BRIKKE Ø10.5-Ø21X2 ELZN	WASHER Ø10.5-Ø21X2 GALV	
35	852160	2	NYLOCKMUTTER M10 ELZN	NYLOCK NUT M10 GALV	
36	323781	1	VINKELINDIKATOR SV.	INDICATOR	

Kverneland

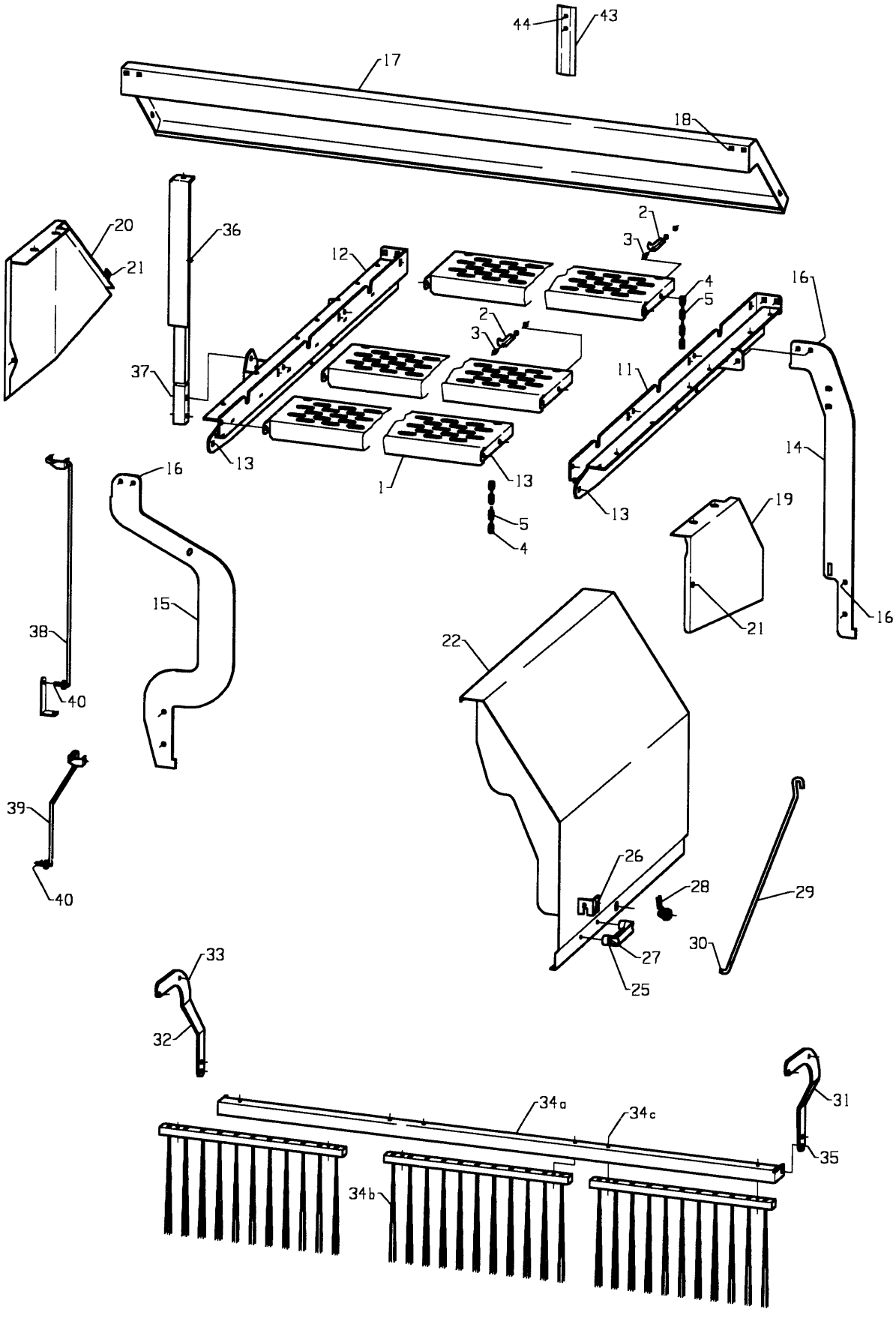

Fig. 64

Utgave: / Issue: 5	Redskap: / Implement: POTETHØSTER 2600 / POTATO HARVESTER 2600	Kverneland
Dato: / Date: 02-06	Enhet / Unit: VERNESKJERM / PROTECTION GUARD	Fig nr.: 64

Ref. No.	Delenr. Part no.	Ant. Qty.	Gjenstand	Description	Anmerkning Note
37	813545	2	SEKSKANTSKRUE M10X45-8.8 ELZN	HEX. BOLT M10X45-8.8 GALV	
37	860160	4	BRIKKE Ø10,5-Ø21X2 ELZN	WASHER Ø10.5-Ø21X2 GALV	
37	852160	4	NYLOCKMUTTER M10 ELZN	NYLOCK NUT M10 GALV	
38	323777	1	VISERSTANG KORT SV.	STAY SHORT	
39	323779	1	VISERSTANG LANG SV.	STAY LONG	
40	865170	2	SPLINT 3.2X20 ELZN	SPLIT PIN 3.2X20 GALV	
41	860160	4	BRIKKE Ø10.5-Ø21X2 ELZN	WASHER Ø10.5-Ø21X2 GALV	
42	813430	1	SEKSKANTSKRUE M8X30-8.8 ELZN	HEX. BOLT M8X30-8.8 GALV	
42	860158	3	BRIKKE Ø8.4-Ø17X1.6 ELZN	WASHER Ø8.4-Ø17X1.6 GALV	
42	852158	1	NYLOCKMUTTER M8 ELZN	NYLOCK NUT M8 GALV	
43	323849	1	FORLENGER	EXTENSION	
44	813425	2	SEKSKANTSKRUE M8X25-8.8 ELZN	HEX. BOLT M8X25-8.8 GALV	
44	860158	4	BRIKKE Ø8.4-Ø17X1.6 ELZN	WASHER Ø8.4-Ø17X1.6 GALV	
44	852158	2	NYLOCKMUTTER M8 ELZN	NYLOCK NUT M8 GALV	

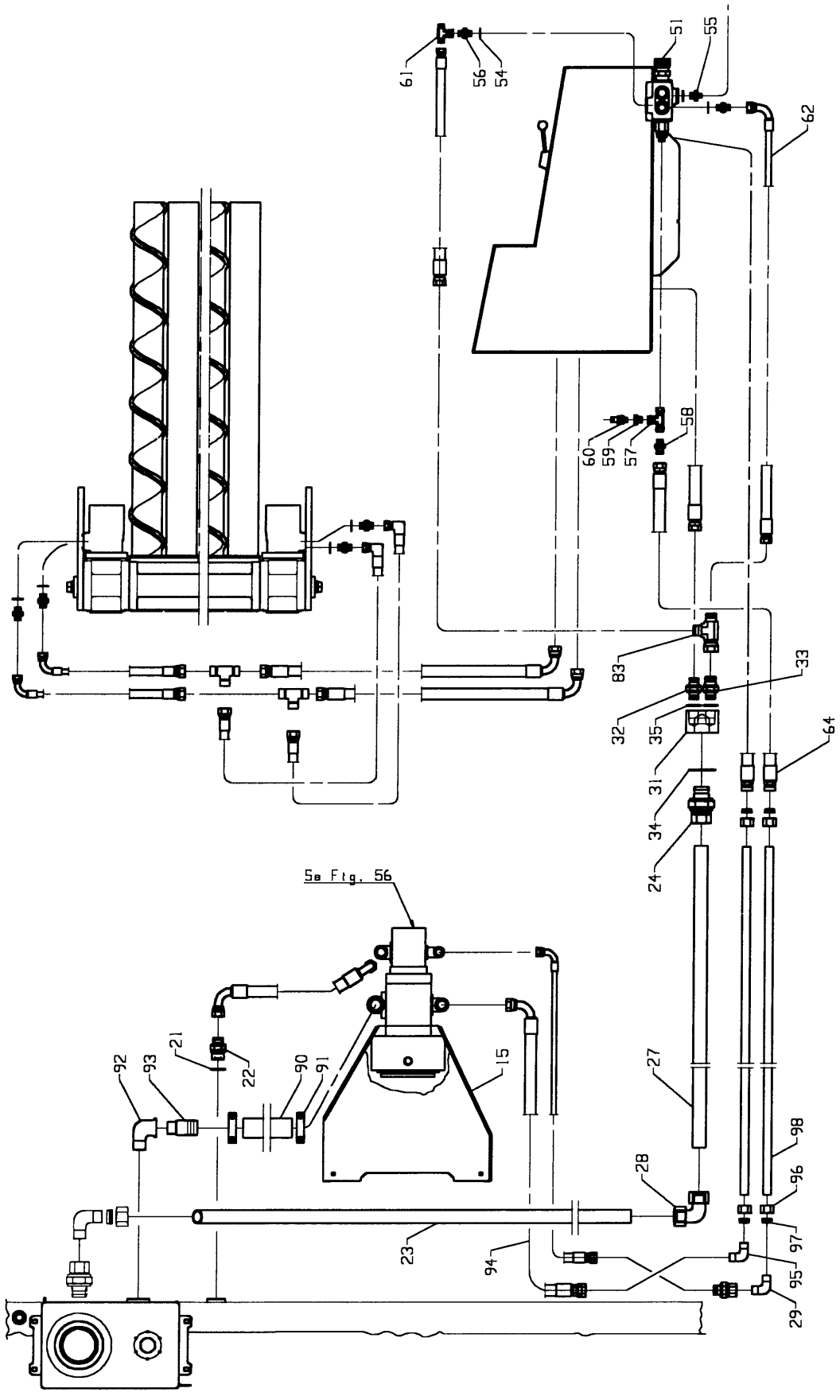
61
56
54
51
55
62
58
60
59
57
83
33
32
35
31
64
34
24
See Fig. 56
21
22
92
93
90
91
15
27
98
28
96
23
94
97
95
29

Fig. 65

Utgave: / Issue: 5	Redskap: / Implement: POTETHØSTER 2600 / POTATO HARVESTER 2600	Kverneland
Dato: / Date: 02-06	Enhet / Unit HYDRAULIKK PUMPESIDE / HYDRAULICS PUMP SIDE	Fig nr.: 65

Ref. No.	Delenr. Part no.	Ant. Qty.	Gjenstand	Description	Anmerkning Note
2	813525	4	SEKSKANTSKRUE M10X25-8.8 ELZN	HEX. BOLT M10X25-8.8 GALV.	
2	860160	4	BRIKKE Ø10.5-Ø21X2 ELZN	WASHER Ø10.5-Ø21X2	
2	852160	4	NYLOCKMUTTER M10 ELZN.	NYLOCK NUT M10 GALV.	
3	306571	1	PLUGG 1/2" BSP M/PAKN.	PLUG 1/2" BSP W/SEAL	
4	219669	1	PAKNINGSRING 1/2" BOND SEAL	SEAL 1/2" PP 45-D	
5	872079	1	O-RING 80X6.5	O-RING	
15	323080	1	HYDR.PUMPESKJERM SV.	PUMP GUARD	
16	813420	2	SEKSKANTSKRUE M8X20-8.8 ELZN	HEX. BOLT M8X20-8.8 GALV	
16	860158	2	BRIKKE Ø8.4-17X1.6 ELZN	WASHER Ø8.4-Ø17X1.6	
16	852158	2	NYLOCKMUTTER M8 ELZN.	NYLOCK NUT M8 GALV.	
17	307803	1	HYD.SUGESLANGE 1 1/2" 550	HYD. HOSE 1 1/2" 550	
21	307804	1	ANSATS 3/4"-1" BSP UU	ADAPTOR 3/4"-1" BSP	
22	307815	1	PAKNINGSRING 1" BOND SEAL	SEAL 1"	
23	322342	1	HYDRAULIKKRØR Ø35X2.3	HYDR.PIPE	
27	322341	1	HYDR.RØR Ø35X2.3	HYDR.PIPE	
28	322365	1	ALBU 90G M35 UU	BEND 90G	
29	322366	2	ALBU 90G M22 UU	BEND 90G	
31	322326	1	RETURKLOSS	RETURN	
32	320186	1	ANSATS 3/4"-3/4" BSP UU	NIPPLE 3/4"-3/4" BSP	
33	306756	1	ANSATS 1/2"-3/4" BSP UU	ADAPTOR 1/2-3/4	
34	322363	1	ANSATS GE-35-LR	NIPPLE GE-25-LR	
35	306757	2	PAKNINGSRING 3/4" BOND SEAL	BOND SEAL 3/4"	
37	322348	1	HYD.SL.1/2"1150 R22I08-90G	HYDR.HOSE 1/2"1150	
51	306511	1	OLJEDELER M.TRYKKBEGRENSER	OIL DEVIDER W/PRESS.RESTRICTOR	
52	813335	1	SEKSKANTSKRUE M6X35-8.8 ELZN	HEX.BOLT	
53	866316	1	SPENNHYLSE 6X16 ELZN	TENSION COLLAR	
54	307814	3	PAKNINGSRING M22 BOND SEAL	SEAL M22	
55	307818	1	ANSATS 3/8"-M22X1.5 BSP/MM UU	ADAPTOR 3/8" M22X1.5	
56	307817	3	ANSATS 1/2"-M22X1.5 BSP/MM UU	ADAPTOR 1/2"-M22X1.5	
57	304001	1	T-KOPLING 1/2" BSP III	T-JUNCTION R1/2"	
58	306756	1	ANSATS 1/2"-3/4" BSP UU	ADAPTOR 1/2-3/4	
59	307820	1	ANSATS 1/2"-1/4" BSP UI FAST K	ADAPTOR 1/2"-1/4"	
60	307821	1	PRØVEUTTAK 1/4" U	TEST PORT 1/4"	
61	411408	1	T-KOPLING 1/2" BSP UUI	T-COUPLING BSP	
62	323473	2	HYDR. SL. 1/2" 700 IO8I08-90G	HYDR. HOSE 3/4" 700	
64	322381	1	HYD.SL. 3/4" 810 S22I12-0G	HYDR.HOSE 3/4" 810	
69	306610	4	RØRKLAMMERHALVDEL Ø30 DOBBEL	TUBE CLAMP Ø30 DOUBLE	
70	306611	2	TOPPLATE 28-30 DOBBEL	TUBE CLAMP PLATE 28-30 DOUBLE	
71	813450	2	SEKSKANTSKRUE M8X50-8.8 ELZN	HEX. BOLT M8X50-8.8 GALV.	
72	322372	8	RØRKLAMMERHALVDEL Ø35 ENKEL	TUBE CLAMPHALF Ø35 SINGLE	
73	322325	4	RØRFESTEPLATE	TUBE BRACKET	
74	813360	8	SEKSKANTSKRUE M6X60-8.8 ELZN	HEX. BOLT M6X60-8.8 GALV	
75	300877	8	RØRKLAMMERHALVDEL Ø22 DOBBEL	TUBE CLAMP HALF Ø22 DOUBLE	
76	300886	4	TOPPLATE 20-25 DOBBEL	PLATE 20-25	
77	813455	4	SEKSKANTSKRUE M8X55-8.8 ELZN.R	HEX. BOLT M8X55-8.8 GALV	
78	860158	4	BRIKKE Ø8.4-17X1.6 ELZN	WASHER Ø8.4-Ø17X1.6	
83	411406	1	T-KOPLING 1/2" BSP UIU	T-CONNECTION	
90-98	**323431**	**1**	**DOBBELTPUMPE KOMPL.**	**DOUBLE PUMP ASSY**	
	322309		**TANDEMPUMPE M/GIR KOMPL.**	**TANDEM PUM ASSY.**	
90	307803	1	HYD. SUGESLANGE 1 1/2" 550	HYDR. SUCTION HOSE 1 1/2" 550	
91	320180	2	SLANGEKLEMME BOLTER 41-50	HOSE CLAMP BOLTS 41-50	
92	306566	1	ALBU INNV.-UTV.GJ.11/4" R.F.92	BEND 11/4" R.F.92	
93	306556	1	SLANGESTUSS Ø40-R1 1/4"	HOSE CONNECTOR Ø40-R1 1/4"	
94	322347	1	HYD.SL.3/4" 1040 R12I12-90G	HYDR. HOSE 3/4" 1040	
95	322368	1	OVERGANG KOR-22-15-L	TRANSITION KOR 22-15-L	
96	320204	2	MUTTER M-22-L	NUT M-22-L	
97	320203	2	SNITTRING D-22-L	RING D-22-L	
98	322329	1	HYDR. RØR Ø22	HYDR. PIPE Ø22	

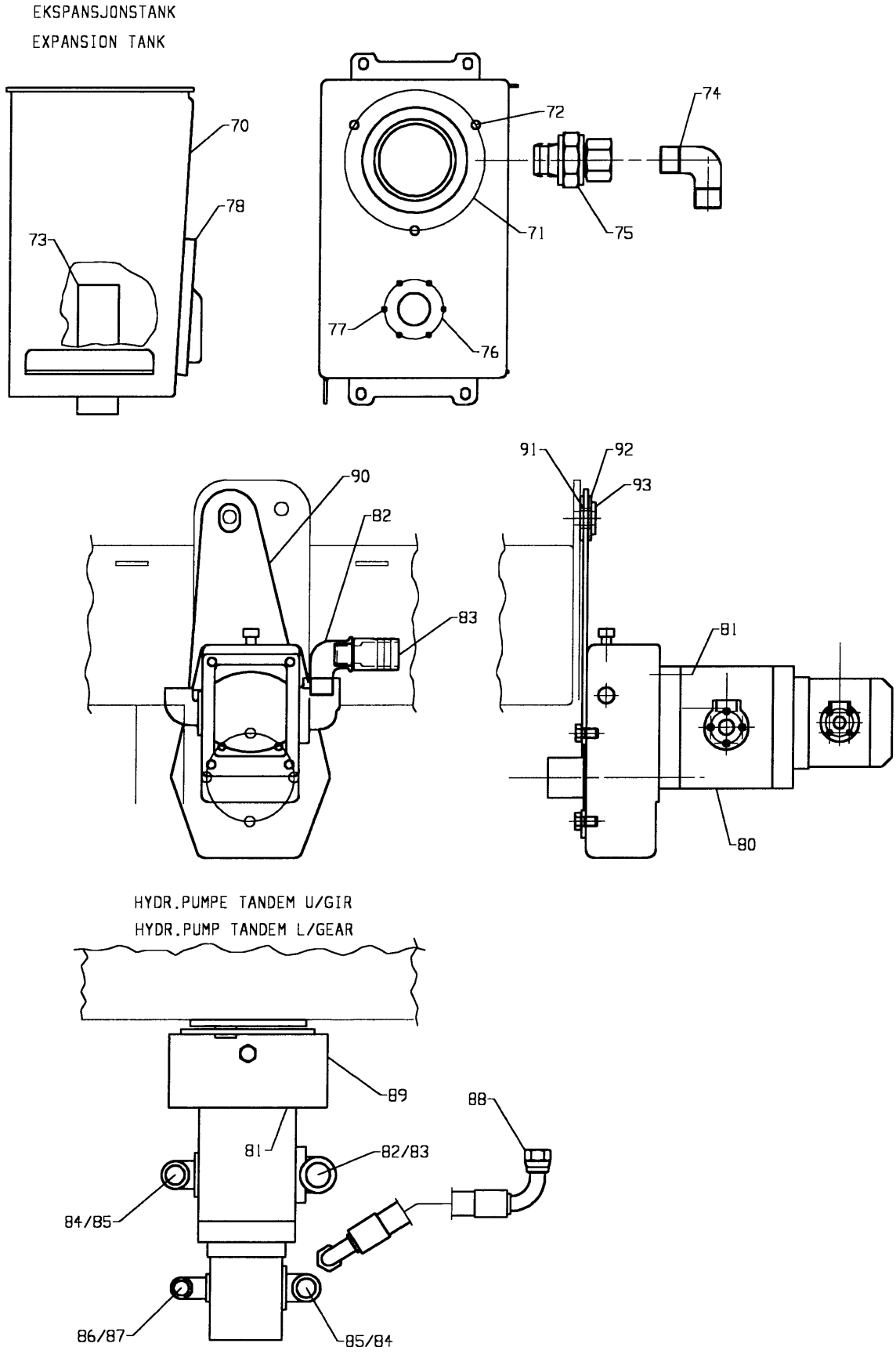
EKSPANSJONSTANK
EXPANSION TANK
70
78
73
72
74
71
75
77
76
91
92
93
90
82
83
81
80
HYDR.PUMPE TANDEM U/GIR
HYDR.PUMP TANDEM L/GEAR
89
88
81
82/83
84/85
86/87
85/84

Fig. 66

Utgave: / Issue: 5	Redskap: / Implement: POTETHØSTER 2600 / POTATO HARVESTER 2600	Kverneland
Dato: / Date: 02-06	Enhet / Unit EKSPANSJONSTANK / EXPANSION TANK	Fig nr.: 66

Ref. No.	Delenr. Part no.	Ant. Qty.	Gjenstand	Description	Anmerkning Note
70-79	**322360**	**1**	**EKSPANSJONSTANK KPL.**	**EXPANSION TANK ASSY**	
70	306618	1	EKSPANSJONSTANK SV.	EXPANSION TANK	
71	306578	1	RETURFILTER FIO 180/1	FILTER FIO 180/1	
72	813530	3	SEKSKANTSKRUE M10X30-8.8 ELZN	HEX. BOLT M10X30-8.8 GALV.	
72	852160	3	NYLOCKMUTTER M10 ELZN.	NYLOCK NUT M10 GALV.	
73	306579	1	HYD.SUGESLANGE 1 1/2" 160	HYDR. HOSE 1 1/2" 160	
74	322364	1	ALBU eVW-35-L	BEND	
75	322363	1	ANSATS GE-35-LR	NIPPLE	
76	306581	1	PÅFYLLINGSLOKK 10My TCO501V	FILLING CAP 10My TCO501V	
77	852155	6	NYLOCKMUTTER M5 ELZN.	NYLOCK NUT M6 GALV.	
78	306582	1	NIVÅGLASS LVO 127/12	LEVEL CONTROLLER LVO 127/12	
79	872079	1	O-RING 80X6.5	O-RING	
80-94	**322309**	**1**	**TANDEMPUMPE M/GIR KPL.**	**HYDR. PUMP TANDEM W/GEAR**	
80	306524	1	TANNHJ.PUMPE TANDEM 52-21CCM	DUAL PUMP 52-21CCM	
81	825430	4	SYL.SKR. M/6KT HOL M10X30-12.9	INHEX CYL. BOLT M10X30-12.9	
82	306567	1	ALBU INNV.-UTV.GJ. 1" R.F. 92	BEND INT.-EXT.THREADS 1"	
83	306555	1	SLANGESTUSS Ø40-R1"	HOSE CONNECTOR Ø40-R1"	
84	320186	2	ANSATS 3/4"-3/4" BSP UU	NIPPLE 3/4"-3/4" BSP	
85	306757	2	PAKNINGSRING 3/4" BOND SEAL	BOND SEAL 3/4"	
86	300971	1	ANSATS 1/2"-1/2" BSP UU	NIPPLE 1/2"-1/2" BSP	
87	219669	1	PAKNINGSRING 1/2" BOND SEAL	SEAL 1/2" PP 45-D	
88	307802	1	HYD.SL.3/4"530 I12-90G-I12-90G	HYD. HOSE 3/4" 530	
89	306542	1	GIR 3.8:1 F.HYDR.PUMPE GR3-2	GEAR 3.8:1 F HYDR.PUMP GR3-2	
90	306078	1	MOTHOLD	RETAINER	
91	410846	1	HYLSE Ø17.5-Ø25X14.5	SPACER Ø17.5-Ø25X14.5	
92	306079	2	BRIKKE Ø26-Ø55X4 GUMMI	BRIKKE Ø26-Ø55X4 GUMMI	
93	300520	1	BRIKKE Ø17-Ø40X5 GALV	WASHER Ø17-Ø40X5	
94	813850	1	SEKSKANTSKRUE M16X50-8.8 ELZN	HEX. BOLT M16X50-8.8 GALV.	
94	860166	1	BRIKKE Ø17-Ø30X3 ELZN	WASHER Ø17-Ø30X3	
94	852166	1	NYLOCKMUTTER M16 ELZN.	NYLOCK NUT M16 GALV	

Kverneland

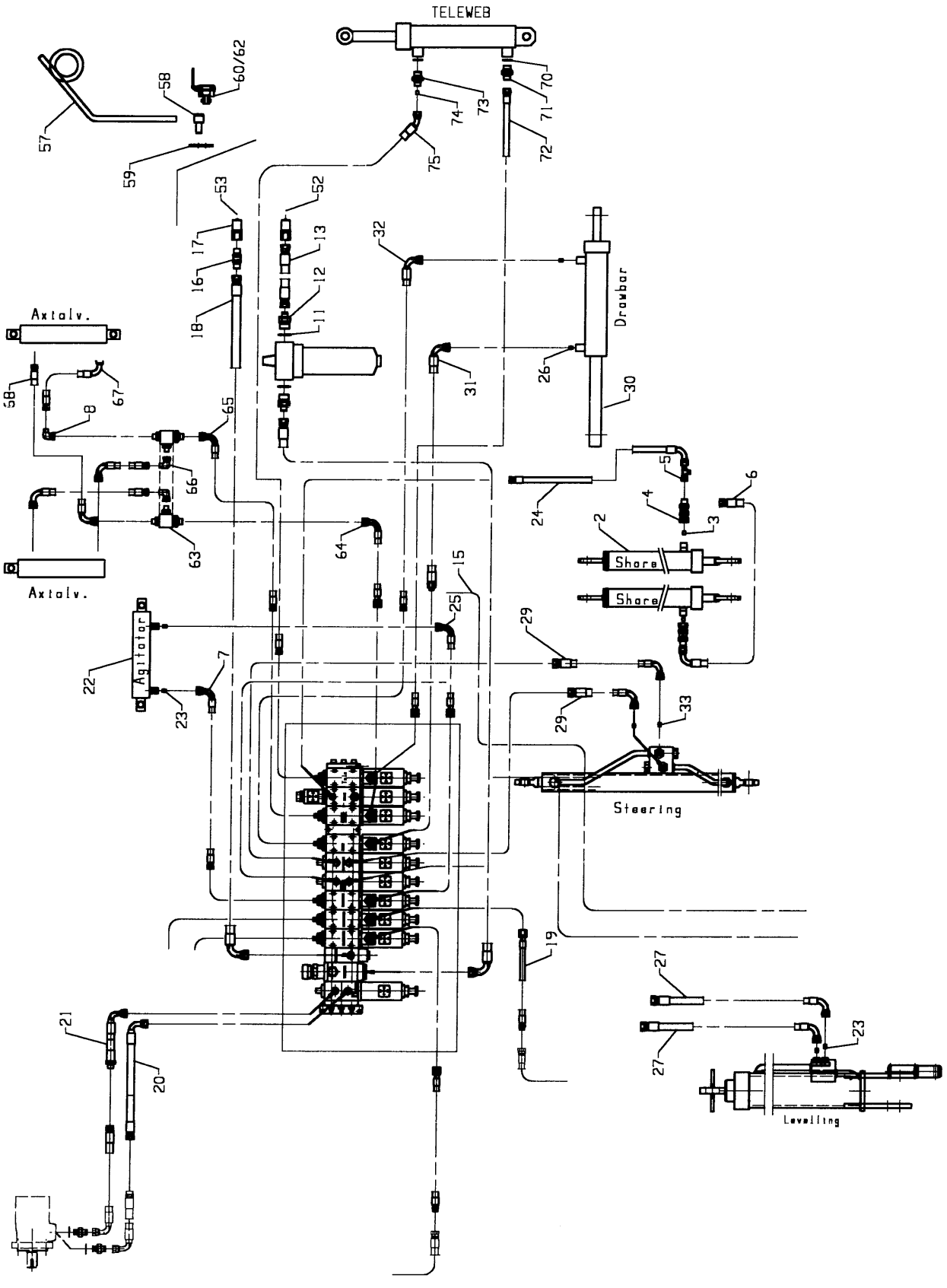

Fig. 67

Utgave: / Issue: 5	Redskap: / Implement: POTETHØSTER 2600 / POTATO HARVESTER 2600	Kverneland
Dato: / Date: 02-06	Enhet / Unit HYDRAULIKK TRAKTORSIDE / HYDRAULICS TRAKTORSIDE	Fig nr.: 67

Ref. No.	Delenr. Part no.	Ant. Qty.	Gjenstand	Description	Anmerkning Note
	323466		**HYDR./ DIV, TRAKTORS BASIS TELE**	**HYDR./DIV TRACTORS BASIC TELE**	
2	300810	2	SYLINDER TREKK Ø40/Ø20X590+350	CYTLINDER Ø40/Ø20X590+350	
3	410730	2	STRUPENIPPEL Ø1.4	RESTRICTOR Ø1.4	
4	322355	2	STRUPT NIPPEL Ø1 3/8"-3/8"UI	RESTRICTOR Ø1 3/8"-3/8"UI	
5	411885	1	T-KOPLING 3/8" BSP UIU	T-JUNCTION 3/8" BSP	
6	322392	1	HYD.SL.1/4" 4550 I06I06-90G	HYDR. HOSE 1/4" 4550	
7	300989	1	HYD.SL.1/4" 1200 I04I06-90G	HYDR. HOSE 1/4" 1200	
8	307824	1	ALBU 90GRD 1/4" BSP UI	BEND 90D 1/4" BSP	
9	306684	1	TRYKKFILTER PARKER 12M-1	FILTER PARKER 12M-1	
10	813420	4	SEKSKANTSKRUE M8X20-8.8 ELZN	HEX. BOLT M8X20-8.8 GALV	
10	860158	4	BRIKKE Ø8.4-Ø17X1.6 ELZN	WASHER Ø8.4-Ø17X1.6 GALV	
11	306757	2	PAKNINGSRING 3/4" BOND SEAL	BOND SEAL 3/4"	
12	306756	2	ANSATS 1/2"-3/3" BSP UU	ADAPTOR 1/2"-3/4"	
13	300901	1	HYD.SL.1/2" 4550 I08U08-08	HYDR. HOSE 1/2" 4550	
14	300877	2	RØRKLAMMERHALVDEL Ø22 DOBBEL	TUBE CLAMP HALF Ø22 DOUBLE	
15	322377	1	HYD.SL.1/2" 750 I08I08-90G	HYDR. HOSE 1/2" 750	
16	300968	1	TILBAKESLAGSVENTIL	TURN VALVE	
17	313882	2	HURTIGKOPLING 1/2" HANN M/TAPP	QUICK RELEASE COUPLING 1/2"	
18	300902	1	HYD.SL.1/2" 5300 I08I08-90G	HYDR. HOSE 1/2" 5200	
19	304310	2	HYD.SL.1/4" 5150 R12U04-OG	HYDR. HOSE 1/4" 5150	
20	322390	1	HYD.SL.3/8" 4950 I06I06-90G	HYDR. HOSE 3/8" 4950	
21	322391	1	HYD.SL.3/8" 4950 I06I06-90G	HYDR. HOSE 3/8" 4950	
22	310089	1	SYLINDER DV Ø40/Ø25X300+180	CYLINDER DA Ø40/Ø25X300+180	
23	300953	2	STRUPENIPPEL Ø1 KVK	RESTRICTOR Ø1 KVK	
24	300989	1	HYD.SL.1/4" 1200 I04I06-90G	HYDR. HOSE 1/4" 1200	
25	300981	1	HYD.SL.1/4" 1650 R12I06-90G	HYDR. HOSE 1/4" 1650	
26	313750	1	STRUPENIPPEL M8-Ø0.8	RESTRICTOR M8-Ø0.8	
27	300904	2	HYD.SL.1/4" 4600 I04I06-90G	HYDR. HOSE 1/4" 4600	
28	322358	2	STRUPENIPPEL Ø0.5	STRUPENIPPEL Ø0.5	
29	300904	2	HYD.SL.1/4" 4600 I04I06-90G	HYDR. HOSE 1/4" 4600	
30	300814	1	SYLINDER DV Ø50/Ø28X600+200	CYLINDER DA Ø50/Ø28X600+200	
31	322379	1	HYD.SL.1/4" 2600 R12I06-90G	HYDR. HOSE 1/4" 2600	
32	322378	1	HYD.SL.1/4" 2750 I04I06-90G	HYDR. HOSE 1/4" 2750	
33	300953	2	STRUPENIPPEL Ø1 KVK	RESTRICTOR Ø1 KVK	
34	257772	1	BUNTEBAND 7X250	STRAP 7X250	
40	301780	1	FILTERFESTE (PARKER)	FILTER BRACKET (PARKER)	
41	813530	1	SEKSKANTSKRUE M10X30-8.8 ELZN	HEX. BOLT M10X30-8.8 GALV	
41	860160	2	BRIKKE Ø10.5-Ø21X2 ELZN	WASHER Ø10.5-Ø21X2 GALV	
41	852160	1	NYLOCKMUTTER M10 ELZN	NYLOCK NUT M10 GALV	
42	813630	1	SEKSKANTSKRUE M12X30-8.8 ELZN	HEX. BOLT M12X30-8.8 GALV	
42	860163	2	BRIKKE Ø13-Ø24X2.5 ELZN	WASHER Ø13-Ø24X2.5 GALV	
42	852162	1	NYLOCKMUTTER M12 ELZN	NYLOCK NUT M12 GALV	
43	300883	30	RØRKLAMMERHALVDEL Ø20 DOBBEL	TUBE CLAMP HALF Ø20 DOUBLE	
44	300886	15	TOPPLATE 20-25 DOBBEL	TOP PLATE 20-25 DOUBLE	
45	300875	42	RØRKLAMMERHALVDEL Ø14 DOBBEL	RUBE CLAMP HALF Ø14 DOUBLE	
46	300885	10	TOPPLATE 14-18 DOBBEL	TOP PLATE 14-18 DOUBLE	
47	813445	4	SEKSKANTSKRUE M8X45-8.8 ELZN	HEX. BOLT M8X45-8.8 GALV	
48	813470	3	SEKSKANTSKRUE M8X45-8.8 ELZN	HEX. BOLT M8X45-8.8 GALV	
49	313823	10	BUNTEBAND 7.9X381	STRAP 7.9X381	
50	313824	10	BUNTEBAND 4.9X197	STRAP 4.7X197	
51	216071	10	BUNTEBAND 3.5X150	STRAP 3.5X150	
52	410723	1	STØBESKYTTER GUL	DUST CAP YELLOW	
53	410724	1	STØVBESKYTTER BLÅ	DUST CAP BLUE	
54	322321	1	DEKSEL	GUARD	
55	322324	1	SLANGEFESTE	TUBE BRACKET	
56	306610	6	RØRKLAMMERHELVDEL Ø30 DOBBEL	TUBE CLAMP HALF Ø30 DOUBLE	
57	300851	1	SLANGEHENGER	TUBE BRACKET	
58	300852	1	HENGERSKRUE		
58	860175	1	BRIKKE Ø26-Ø44X4 ELZN	WASHER Ø26-Ø44X4 ELZN	
58	850166	1	SEKSKANTMUTTER M16-8 ELZN	HEX. NUT M16-8 GALV	
59	322327	1	SLANGEHOLDER	TUBE BRACKET	
60	217675	2	SLANGEPARKERINGSHOLDER	TUBE PARKING BRACKET	

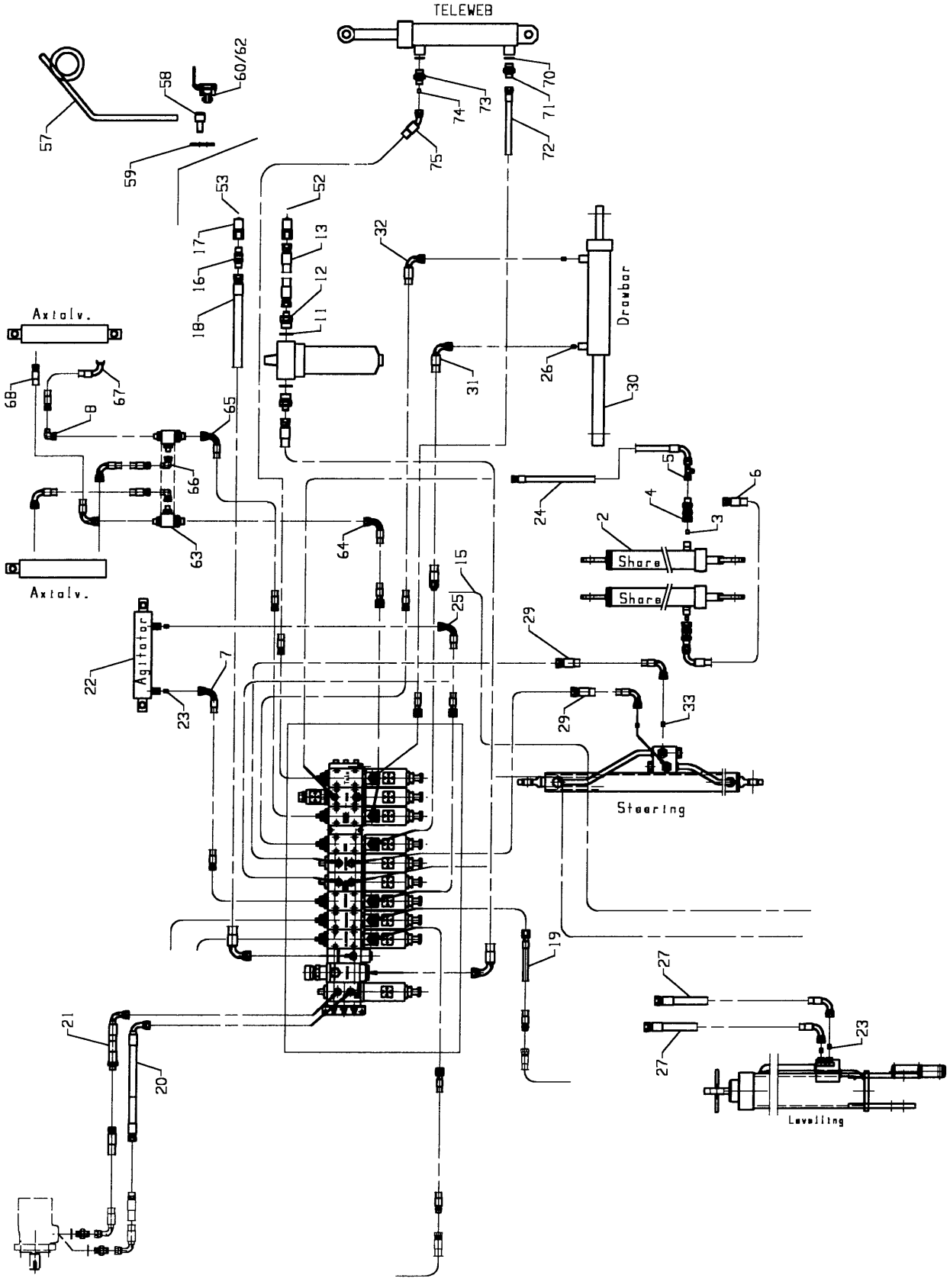
TELEWEB
Drawbar
Share
Share
Steering
Levelling
Agitator
Axtalv.
Axtalv.

Fig. 67

Utgave: / Issue: 5	Redskap: / Implement: POTETHØSTER 2600 / POTATO HARVESTER 2600	Kverneland
Dato: / Date: 02-06	Enhet / Unit HYDRAULIKK TRAKTORSIDE / HYDRAULICS TRAKTORSIDE	Fig nr.: 67

Ref. No.	Delenr. Part no.	Ant. Qty.	Gjenstand	Description	Anmerkning Note
61	259345	2	BRIKKE -Ø18.5-Ø34.5X1.25	WASHER Ø18.5-Ø34.5X1.25	
62	217676	2	SLANGEPARKERINGSLOKK		
63	323489	1	MANIFOLD MONTERT	MANIFOLD ASSY	
64	322399	1	HYD.SL. 1/4" 5150 R12I06-90G	HYDR. HOSE 1/4" 5150	
65	322393	1	HYD.SL.1/4" 4900 I04I06-90G	HYDR. HOSE 1/4" 4900	
66	307824	3	ALBU 90GRD 1/4" BSP UI	BEND 1/4" BSP	
67	306707	1	HYD.SL.1/4" 3600 I04I06-90G	HYDR. HOSE 1/4" 3600	
68	316159	1	HYD.SL.1/4" 3500 I06I04-90G	HYDR. HOSE 1/4" 2500	
69	332642	2	HYD.SL.1/4" 620 I04I06-90G	HYDR. HOSE 1/4" 620	
70	219669	2	PAKNINGSRING 1/2" BOND SEAL	BOND SEAL 1/2"	
71	410747	1	ANSATS 3/8"-1/2" BSP UU	ADAPTOR 3/8"-1/2" BSP UU	
72	323494	1	HYD.SL.1/4" 6400 DKO12 I06	HYDR. HOSE 1/4" 6400	
73	410735	1	ANS.1/2"-3/8"BSP UU STRUP M8	ADAPTOR 1/2"-3/8"BSP M8	
74	313750	1	STRUPENIPPEL M8-Ø0.8	RESTRICTOR M8-Ø0.8	
75	440822	1	HYD.SL.1/4" 6100 I06I06-45	HYDR. HOSE 1/4" 6100	

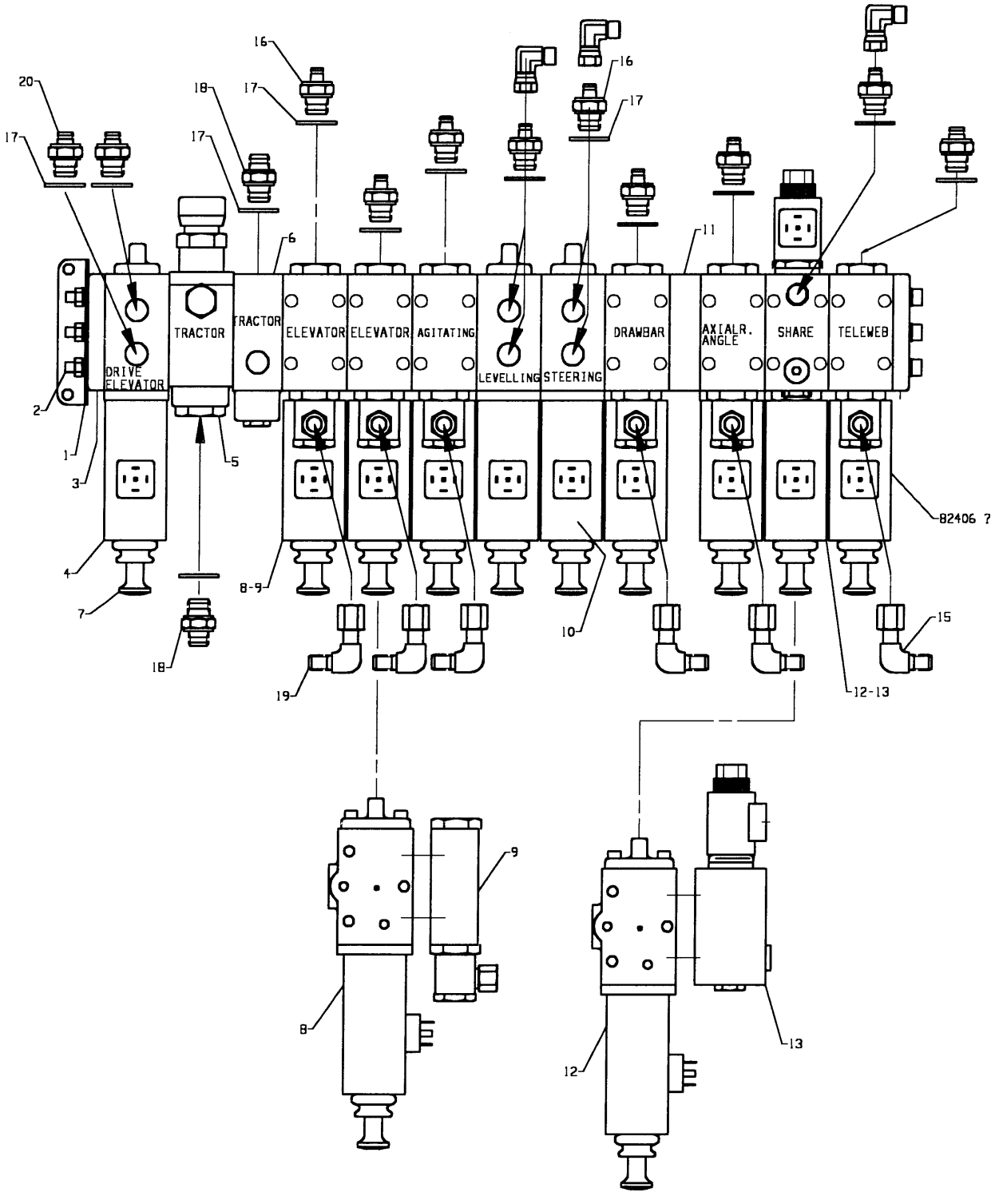
DRIVE ELEVATOR
TRACTOR
TRACTOR
ELEVATOR
ELEVATOR
AGITATING
LEVELLING
STEERING
DRAWBAR
AXIALR. ANGLE
SHARE
TELEWEB
82406 7

Fig. 68

Utgave: / Issue:	5	Redskap: / Implement:	POTETHØSTER 2600 POTATO HARVESTER 2600	Kverneland
Dato: / Date:	02-06	Enhet / Unit	HYDRAULIKK SENTRAL HYDRAULIC VALVE BANK	Fig nr.: 68

Ref. No.	Delenr. Part no.	Ant. Qty.	Gjenstand	Description	Anmerkning Note
1-15	**322314**	**1**	**HYDR.SENTR.M/MIDTF.+LÅS(7+2)S**	**CONTROL VALVE (7+2)S**	
1	306667	1	FOTVINKEL	BRACKET	
2	306665	3	LANG STR.BOLTSETT GR.VENTIL 94	LONG ASSEMBLY ROD	
3	300936	1	ENDESTYKKE	END PLATE	
4	300930	1	HYDR.VENT.3POS.4VEIS.	HYDR.VALVE 3POS,4 WAY	
5	300933	5	OLJEDELER	PRIORITY FLOW DEVIDER	
6	300934	1	AVLASTNINGSVENTIL	UNLOADING VALVE	
7	313722	9	BAKELITTKNOTT	BAKELITTKNOT	
8-9	**300932**	**5**	**RETN.VENTIL 4-VEIS M/LÅSEV.**	**VALVE 4 WAYS W/CHECK VLV.**	
8	300943	5	HYDR.VENT.3POS.4VEIS.FOR LÅSEV	HYDR.VALVE 3P. 4 WAY FOR LOCK	
9	300944	5	LÅSEVENTIL FOR HYDR.VENTIL 3P.	LOCK VALVE	
10	322315	2	HYDR.VENT.3POS.4VEIS	HYDR.VALVE 3POS.4WAY.	
11	306668	1	MIDTFESTE	BRACKET	
12-13	**322317**	**1**	**HYDR.VENTIL M/EL.LØS KPL.**	**HYDR.VALVE**	
12	300943	1	HYDR.VENT.3POS.4VEIS.FOR LÅSEV	HYDR.VALVE 3P. 4 WAY FOR LOCK	
13	322316	1	EL.LØSEVENTIL	EL.CHECK VALVE	
14	300935	1	ENDESTYKKE M/J.D. OMSTILLING	END PLATE CLOSED CENTRE FUNC.	
15	306670	3	STREKKBOLTSETT UTV.(+1 SLEIDE)	ASSEMBLY ROD (+1 SLIDE)	
20	300965	14	PAKNINGSRING M18 BOND SEAL	BOND SEAL M18	
21	300955	2	ANSATS 3/8"-M18X1.5 BSP/MM UU	NIPPLE R3/8"-M18X1.5	
22	300970	2	ANSATS 1/2"-M18X1.5 BSP/MM UU	ADAPTOR R1/2"-M18X1.5	
23	300956	10	ANSATS 1/4"-M18X1.5 BSP/MM UU	ADAPTOR R1/4"-M18X1.5	
24	300964	5	ALBU EVW Ø12-Ø12	JUNCTION EVW Ø12-Ø12	
25	307824	5	ALBU 90GRD 1/4" BSP UI	BEND 1/4"	
*	**300941**	**1**	**SERVICE-SETT,BUCHER HYDR.SENT.**	**SERVICE SET FOR CONTROL VALVE**	
*	300947	1	PAKN.-MONTASJESETT	LARGE SEAL KIT MOUNTING SET	
*	300949	1	SERVICESETT FOR OLJEDELER	SERV.SET FOR PR. FLOW DEVIDER	
*	300950	1	SERVICESETT FOR LÅSEVENTIL	SERVICE SET FOR LOCK VALVE	

Kverneland

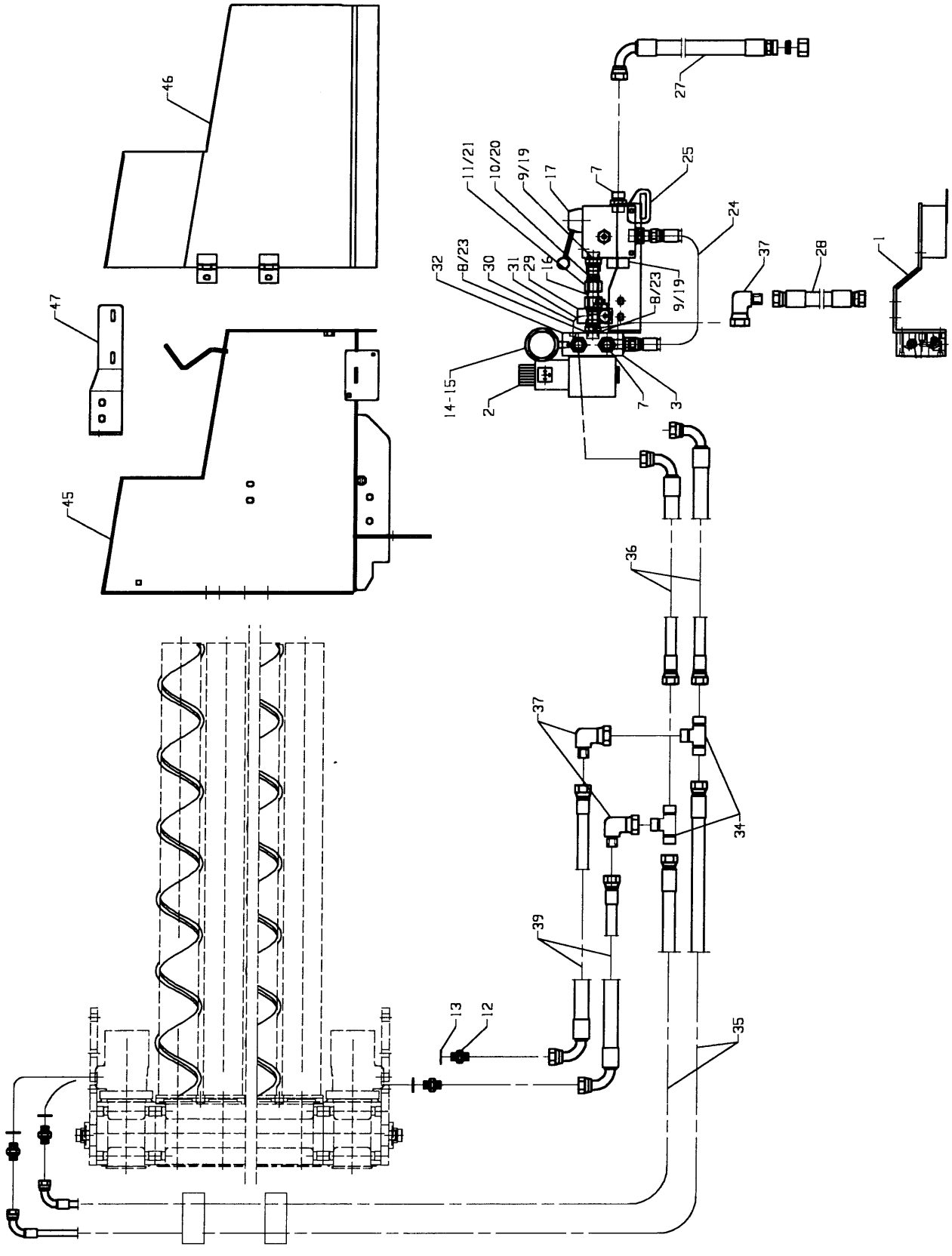

Fig. 69

Utgave: / Issue: 5	Redskap: / Implement: POTETHØSTER 2600 / POTATO HARVESTER 2600	Kverneland
Dato: / Date: 02-06	Enhet / Unit: HYDRAULIKK AKSIALRULLER / HYDRAULICS ROLLERS	Fig nr.: 69

Ref. No.	Delenr. Part no.	Ant. Qty.	Gjenstand	Description	Anmerkning Note
1-39	**323464**	**1**	**HYDR. FOR AKS.RULLER TELE MONT.**	**HYDRAULIC FOR AXIAL ROLLERS**	
1	323456	1	FESTE FOR HYDR. VENTILER	BRACKET FOR HYDR. VALVES	
2	306692	1	MAGNETVENTIL VICKERS N10 12V	MAGNET VALVE N10 12V	
3	306695	1	UNDERLAGSPLATE	PLATE	
4	825155	2	SYL.SKR. M/6KT.HOL M6X55-12.9	CYLINDER BOLT M6X55-12.9	
4	860156	2	BRIKKE Ø6.6-Ø12X1.5 ELZN	WASHER Ø6.6-Ø12X1.5 GALV	
4	852156	2	NYLOCKMUTTER M6 ELZN	NYLOCK NUT M6 GALV	
6	825135	2	SYL.SKR. M/6.KT.HOL M6X35-12.9	CYLINDER BOLT M6X25	
7	320186	3	ANSATS 3/4"-3/4" BSP UU	ADAPTOR 3/4"-3/4" BSP	
8	306757	4	PAKNINGSRING 3/4" BOND SEAL	SEAL 3/4"	
9	307748	1	RETT NIPPEL Ø22-3/4"	NIPPLE Ø22-3/4"	
10	320203	1	SNITTRING D-22-L	RING D-22-L	
11	320204	1	MUTTER M-22-L	NUT M-22-L	
12	300971	4	ANSATS 1/2"-1/2" BSP UU	ADAPTOR 1/2"-1/2" BSP	
13	219669	4	PAKNINGSRING 1/2" BOND SEAL	BOND SEAL 1/2"	
14	306699	1	MANOMETER Ø63 0-250BAR	MANOMETER Ø62 0-250 BAR	
15	306698	1	SKJÆRERING 1/4"	RING 1/4"	
16	323409	1	HYDRAULIKKRØR Ø22X115	HYDRAULIC TUBE Ø22X115	
17	306513	1	OLJEDELER M/TRYKKBEGRENSER	DEVIDER W. RELIEF VALVE	
18	320186	1	ANSATS 3/4"-3/4" BSP UU	ADAPTOR 3/4"-3/4" BSP	
19	307748	1	RETT NIPPEL Ø22-3/4"	NIPPLE Ø22-3/4"	
20	320203	1	SNITTRING D-22-L	RING D-22-L	
21	320204	1	MUTTER M-22-L	NUT M-22-L	
22	306756	1	ANSATS 1/2"-3/4" BSP UU	ADAPTOR 1/2"-3/4" BSP	
23	306757	3	PAKNINGSRING 3/4" BOND SEAL	BOND SEAL 3/4"	
24	322344	1	HYD.SL.1/2" 590 I08I08-OG	HYDR. HOSE 590	
25	323407	1	PARKERINGSPLATE F. STYREPANEL	PARKING PLATE	
26	813465	2	SEKSKANTSKRUE M8X65-8.8 ELZN	HEX. BOLT M8X65-8.8 GALV	
26	860158	2	BRIKKE Ø8.4-Ø17X1.6 ELZN	WASHER Ø8.4-Ø17X1.6	
26	852158	2	NYLOCKMUTTER M8 ELZN	NYLOCK NUT M8 GALV	
27	323470	1	HYD.SL. 3/4" 1160 S22I12-90G	HYDR. HOSE 3/4" 1160	
28	322346	1	HYD.SL 3/4" 770 I12I12-OG	HYDR. HOSE 3/4" 770	
29	306697	1	PRESSOSTAT (HYDROPA)	PRESSOSTAT (HYDROPA)	
30	300957	2	ANSATS 1/4"-1/4" BSP UU	ADAPTOR 1/4"-1/4" BSP	
31	300959	1	ALBU 90GRD 1/4" BSP II	BEND 1/4" BSP	
32	300966	2	PAKNINGSRING 1/4" BOND SEAL	BOND SEAL 1/4"	
33	323471	2	HYD.SL. 3/4" 950 I12I12-90G	HYDR. HOSE 3/4" 950	
34	320839	2	T.KOPLING 3/4" BSP UU	T-CONNECTION 3/4" BPS	
35	322349	2	HYD.SL 1/2" 2950 I08-90G	HYDR. HOSE 1/2" 2950	
36	322397	2	HYD.SL.3/4" 700 I12I12-90	HYDR. HOSE 3/4" 700	
37	324695	2	ALBU 90GRD 3/4" BSP UI	BEND 3/4" BSP	
38	320839	2	T.KOPLING 3/4" BSP UI	T-CONNECTION 3/4"	
39	323474	2	HYD.SL.1/2" 820 I12I08-90G	HYDR. HOSE 1/2" 820	
45	323450	1	HYDRAULIKKSKAP SV.	CABINET	
46	323460	1	SKJERM	GUARD	
47	323456	1	FESTE FOR HYDR.VENTILER	BRACKET FOR HYDR. VALVES	

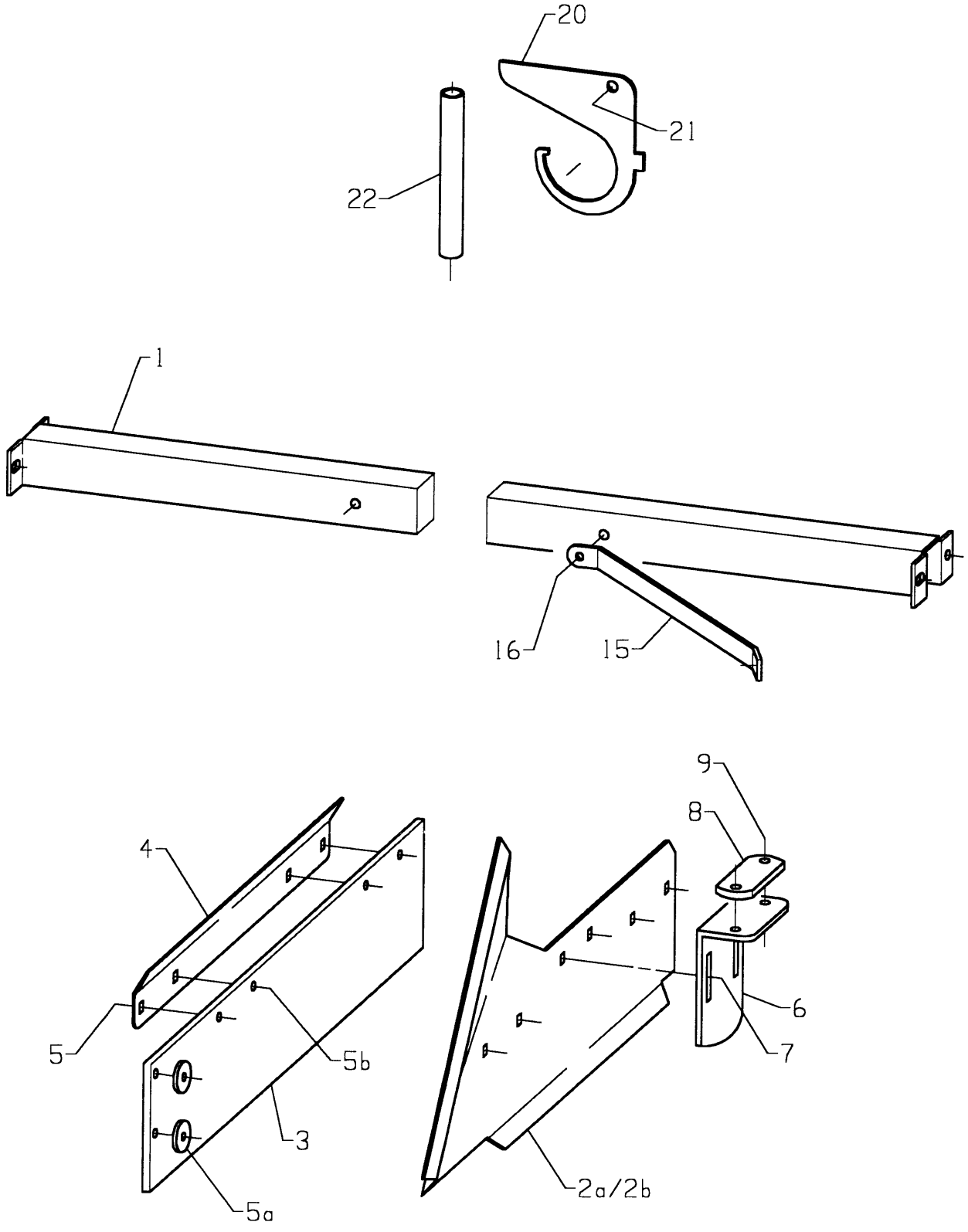

Fig. 70

Utgave: / Issue:	5	Redskap: / Implement:	POTETHØSTER 2600 POTATO HARVESTER 2600	Kverneland
Dato: / Date:	02-06	Enhet / Unit	SORTERBORD - TELEBELTE PICKING TABLE - TELEWEB	Fig nr.: 70

Ref. No.	Delenr. Part no.	Ant. Qty.	Gjenstand	Description	Anmerkning Note
1-16	**323756**	**1**	**SIDESKJERMER KOMPL.**	**SIDE GAURD ASSY**	
1	323813	1	KANAL	SHAFT	
2a-9	**323750**	**1**	**LEDESKJERM V.**	**GUARD LEFT**	
2b-9	**323751**	**1**	**LEDESKJERM H.**	**GUARD RIGHT**	
2a	323752	1	SKJERM V.	GUARD LEFT	
2b	323753	1	SKJERM H.	GUARD RIGHT	
3	323755	1	LEDEGUMMI	RUBBER	
4	323754	1	LIST	LIST	
5	821430	6	LÅSESKRUE M8X30-4.6 ELZN	CARRIAGE NUT M8X30-4.6 GALV	
5a	410141	2	BRIKKE Ø9-Ø35X4	WASHER Ø9-Ø35X4	
5b	860158	4	BRIKKE Ø8.4-Ø17X1.6 ELZN	WASHER Ø8.4-Ø17X1.6 GALV	
5	852158	6	NYLOCKMUTTER M8 ELZN	NYLOCK NUT M8 GALV	
6	322636	2	VINKEL	SUPPORT	
7	821530	4	LÅSESKRUE M10X30-4.6 ELZN	CARRIAGE NUT M10X30-4.6 GALV	
7	860160	4	BRIKKE Ø10.5-Ø21X2 ELZN	WASHER Ø10.5-Ø21X2 GALV	
7	852160	4	NYLOCKMUTTER M10 ELZN	NYLOCK NUT M10 GALV	
8	302076	2	LASK 40X8-Ø11/85/Ø11	CLAMP 40X8-Ø11/85/Ø11	
9	813570	4	SEKSKANTSKRUE M10X70-8.8 ELZN	HEX. BOLT M10X70-8.8 GALV	
9	860160	4	BRIKKE Ø10.5-Ø21X2	WASHER Ø10.5-Ø21X2	
10	813530	8	SEKSKANTSKRUE M10X30-8.8 ELZN	HEX. BOLT M10X30-8.8 GALV	
10	860160	8	BRIKKE Ø10.5-Ø21X2 ELZN	WASHER Ø10.5-Ø21X2 GALV	
10	852160	8	NYLOCKMUTTER M10 ELZN	NYLOCK NUT M10 GALV	
11	860163	4	BRIKKE Ø13-Ø24X2.5 ELZN	WASHER Ø13-Ø24X2.5 GALV	
15	323757	2	STØTTE	STAY	
16	813425	4	SEKSKANTSKRUE M8X25-8.8 ELZN	HEX. BOLT M8X25-8.8 GALV	
16	860158	8	BRIKKE Ø8.4-Ø17X1.6 ELZN	WASHER Ø8.4-Ø17X1.6 GALV	
16	852158	4	NYLOCKMUTTER M8 ELZN	NYLOCK NUT M8 GALV	
20	323789	1	SORTERBORDHOLDER	PICKING TABLE HOLDER	
21	813630	2	SEKSKANTSKRUE M12X30-8.8 ELZN	HEX. BOLT M12X30-8.8 GALV	
21	860163	1	BRIKKE Ø13-Ø24X2.5 ELZN	WASHER Ø12-Ø24X2.5 GALV	
21	852162	1	NYLOCKMUTTER M12 ELZN	NYLOCK NUT M12 GALV	
22	323788	1	PLASTSLANGE FOR SORTERBORDHOLDE	PLASTIC HOSE FOR P.TABLE HOLDER	

Numerisk deleregister/Numerical parts index

Delenr. Partno.	Fig/Ref	Delenr. Partno.	Fig/Ref	Delenr. Partno.	Fig/Ref	Delenr. Partno.	Fig/Ref	Delenr. Partno.	Fig/Ref
214263	14/53	300195	15/38	300729	6/27	301139	21/127	302539	29/34
214340	2/62	300200	15/11	300731	8/61	301142	21/132	303001	2/26
214673	35/9	300226	7/41	300760	12/5-6	301144	21/67	303032	7/50a-51
215181	14/57	300227	7/45	300761	12/5	301145	16/31	303033	7/50b-51
215199	56/61	300228	7/5	300769	12/9	301146	56/23	303034	7/50a
215875	33/56	300231	21/180	300770	12/10	301149	56/25	303035	7/50b
216071	27/14	300232	21/14	300771	12/10	301155	21/191	303040	7/25-29
217675	67/60	300249	7/22	300775	12/13	301213	21/187	303041	7/25
217676	67/62	300258	6/1	300781	12/14	301214	21/188	303044	7/27
217781	63/5	300269	6/2	300785	12/24	301220	21/146	303045	7/28
219179	12/56	300278	6/11	300786	12/15	301221	21/147	303129	29/40
219669	20/38	300282	6/3	300792	12/13-27	301222	22/146	303140	15/22
219694	54/55	300285	6/12	300810	34/2	301224	21/149	303145	15/23
220307	51/21	300286	6/18	300814	1/21	301225	21/150	303146	13/46
220346	51/22	300291	6/16	300816	21/140	301226	21/152	303147	13/47
220443	51/31	300304	2/22a	300851	67/57	301227	21/153	303156	13/40
220448	51/6	300318	13/71	300852	67/58	301229	21/161	303157	13/41
220477	42/13	300320	13/60-68	300858	21/94	301232	21/163	303172	17/19
220479	51/25	300322	13/60	300874	37/10	301266	1/19	303185	13/13
220522	51/17	300325	13/61	300875	34/74	301267	1/4	303186	13/12
220526	51/18	300336	13/75	300877	54/78	301274	1/9-11	303310	34/89
220532	51/33	300337	15/20	300883	34/72	301275	1/9	303312	14/34
220534	51/28	300342	13/70	300885	34/75	301276	1/10	303313	14/33
220536	39/76	300345	13/48	300886	34/73	301360	26/9	303324	14/65
220538	51/19	300349	57/153	300887	37/11	301361	26/8	303503	13/11
220539	51/40	300375	14/3	300888	34/18	301374	23/4	303562	13/23
220541	51/29	300376	14/8	300897	54/67	301375	23/5	303608	8/83
220542	51/16	300388	2/6a	300901	34/12	301376	23/8	303609	8/82
220543	51/41	300390	2/22	300902	34/16	301427	18/7	303615	9/24
220544	51/20	300393	39/20	300904	34/61	301428	18/6	303616	9/25
220546	51/32	300401	21/13	300915	34/29	301431	18/3	303617	10/23
220556	51/30	300402	21/126	300930	36/4	301432	19/24	303618	10/24
220598	51/3	300403	21/162	300932	36/8-9	301433	19/26	303683	56/41
220599	51/15	300404	28/11	300933	36/5	301434	19/25	303728	14/52
220623	51/1	300409	14/1	300934	36/6	301439	46/3	303904	5/81
220630	51/14	300410	14/2	300935	36/14	301441	18/5	303912	5/96
221369	28/45	300415	8/5a	300936	36/3	301442	19/26a	304001	65/57
226147	17/21	300416	8/5b	300943	36/12	301443	46/7	304005	54/76
226509	45/41	300419	10/22	300944	36/9	301502	12/54	304305	42/4
228356	14/29	300425	1/7	300952	34/23	301509	12/57	304308	42/3
228577	13/65	300448	14/30	300953	34/25	301510	12/58	304310	34/31
231037	39/64	300520	42/28	300955	36/21	301511	12/59	304518	61/97
231044	28/19	300521	21/182	300956	36/23	301542	16/35	304667	54/33
231231	44/90a	300522	8/38	300957	54/53	301545	8/44	304872	15/50-57
231499	2/43	300524	8/43	300959	69/31	301711	12/48	305196	1/12
231500	7/44	300551	8/5a-17	300964	36/24	301712	12/49	305198	1/17
231701	45/16	300552	8/5b-17	300965	36/20	301725	33/44	305199	1/15
231718	28/23	300554	8/14a	300966	54/8	301768	33/75-79	305270	5/90-92
255392	28/32	300555	8/14b	300968	34/14	301774	33/75	305271	5/90
255483	14/24	300556	8/6	300970	36/22	301776	33/76	305272	5/91
255650	6/32	300557	8/9	300971	42/32	301778	33/78	305273	5/92
255690	12/2b	300559	8/3	300972	34/24	301780	34/70	305280	5/85a-87
255691	12/2a	300563	8/36	300973	54/70	301966	39/40	305281	5/85b-87
255692	12/2	300564	8/20	300974	42/6	301967	39/29-37	305282	5/85
255736	28/27	300565	8/21	300977	37/8	302035	38/25	305283	5/86
255961	28/71	300566	8/23	300978	34/17	302041	39/73	305284	5/87
256168	30/19	300585	21/200	300980	55/9	302076	28/51	305285	5/70a-72
256311	29/38	300620	8/72	300981	34/57	302087	29/18	305286	5/70b-72
256627	16/36	300621	8/74	300989	34/56	302090	43/51b	305287	5/70
256628	16/37	300622	8/73	300990	55/7	302169	24/13	305288	5/71
256941	29/32	300641	12/42	300991	54/82	302173	24/16	305289	5/72
257495	46/19	300642	12/3	300996	34/26	302175	24/26	305290	5/80a-82
257772	30/16	300644	12/44	300997	54/61	302177	24/30	305291	5/80b-82
258230	30/24	300645	12/33	301059	21/100	302178	24/32	305292	5/80
259345	67/61	300646	12/8	301060	21/110	302280	24/29	305293	5/75a-77
270448	39/71a	300659	15/53	301110	21/11a-22	302375	50/1	305294	5/75b-77
270864	1/33	300660	58/33	301111	21/11b-22	302379	50/3	305295	5/75
272979	1/28	300665	15/54	301112	21/11a	302380	50/8	305296	5/76
281457	45/24	300666	15/55	301113	21/11b	302384	50/5	305297	5/77
281459	45/20	300667	15/56	301117	21/20	302387	50/7	305383	10/12
281633	45/18	300668	15/51	301122	21/120	302391	50/9	305384	10/11
286274	43/116	300708	6/28-30	301123	21/121	302392	50/11	305407	7/1a-11
300169	5/82	300709	6/28	301126	21/134	302393	50/13	305408	7/1b-11
300186	15/10	300710	6/29	301129	21/135	302428	28/73	305415	7/12a
300189	15/34	300720	6/37	301130	21/122	302439	28/79	305416	7/12b
300191	14/28	300725	6/27-36	301131	21/123	302494	30/27	305424	7/13

Numerisk deleregister/Numerical parts index

Delenr. Partno.	Fig/Ref Fig/Ref
305426	7/15
305428	7/19
305435	7/40-47
305436	7/40
305439	7/46
305440	7/47
305527	5/10
305545	37/9
305612	44/51
305613	44/76
305646	12/37
305676	44/81
305731	13/44
305764	57/149
305780	14/21
305782	14/25
305783	14/26
305831	14/24a
305851	2/66
305858	13/32-33
305860	13/32
305873	15/2
305874	15/3
305876	15/1-15
305880	15/1
305975	15/50
306060	2/19
306062	2/17
306064	2/20
306066	2/14
306067	2/13
306070	14/1-24
306072	14/9
306073	14/12
306078	42/24
306079	42/27
306086	2/6
306088	2/5
306095	57/56
306116	57/148
306118	14/29a
306170	6/50
306202	2/36
306225	6/52
306261	2/47
306274	44/92
306297	2/45
306315	2/41-43
306316	2/41
306317	2/42
306330	17/7
306331	17/8
306332	43/180-185
306333	17/1
306359	44/93
306360	44/90-95
306369	44/91
306371	44/95
306375	44/80
306380	45/15-30
306381	45/30
306405	46/16
306407	46/12
306408	46/15
306409	46/18
306410	46/11
306417	46/4
306477	45/4
306510	47/21
306511	65/51
306513	69/17
306524	66/80
306528	42/22
306542	42/21
306555	66/83
306556	54/32
306566	54/31
306567	66/82
306571	20/37
306573	54/6
306578	66/71
306579	66/73
306581	66/76
306582	66/78
306610	65/69
306611	65/70
306618	66/70
306665	36/2
306667	36/1
306668	36/11
306670	36/15
306684	34/8
306687	20/25
306692	69/2
306695	69/3
306697	55/4
306698	69/15
306699	69/14
306702	54/15
306707	67/67
306710	54/37
306723	32/1
306726	32/2
306756	34/11
306757	34/10
306793	54/66
306804	21/78
306805	21/106
306812	21/1
306821	21/5
306822	21/6
306831	21/2
306832	21/3
306834	21/98
306835	21/99
306842	21/50
306853	21/74
306854	21/75
306856	21/69
306857	21/71
306858	21/72
306861	21/90
306872	21/60
306873	21/61
306876	21/58
306877	21/59
306880	21/57
306882	21/107
306883	21/80
306886	21/102
306887	21/103
306893	23/2
306902	21/210
306903	21/214
306904	21/215
306906	21/217
306927	21/120-137
306928	21/124
306931	21/145-200
306933	21/145
306943	21/197
306944	21/194
306946	21/195
306947	21/160
306952	24/1
306953	24/2
306957	24/5
306961	24/11
306962	24/7
306963	24/15-24
306964	24/15
307386	56/162
307539	29/4
307540	28/16
307547	29/17
307548	29/19
307742	42/10
307748	69/19
307771	29/24
307773	29/16-22
307774	29/16
307802	66/88
307803	65/17
307804	54/4
307814	47/24
307815	54/17
307817	47/22
307818	47/23
307820	65/59
307821	65/60
307822	56/86
307824	34/7
307825	42/34
308006	18/1-10
308012	18/1a-9a
308017	18/1b-8b
308022	18/1c-9c
308027	18/1d-9d
308032	18/8
308034	18/1
308035	19/11
308036	18/4
308056	19/21
308076	18/6aa
308077	18/7aa
308078	18/6a
308079	18/7a
308088	18/15a
308089	18/15b
308090	18/15c
308091	18/15d
308095	18/1a
308096	18/2a
308097	18/9a
308098	18/1aa
308099	18/2aa
308118	41/15
308146	31/10
308147	31/24
308173	26/1-12
308174	26/13
308175	26/1
308178	24/31
308179	26/5
308180	26/2
308181	26/6
308182	26/11
308183	26/12
308259	40/55
308417	39/24
308418	39/25
308432	38/10
308433	38/11
308521	39/53
308532	39/62
308533	39/67
308543	39/51
308612	39/6
308613	39/7
308623	39/72
308628	39/49
308632	39/56
309041	42/5
309042	42/11
309043	42/12
309050	39/5-76
309055	39/5
309060	39/13
309066	38/8
309070	39/28-41
309071	39/28
309074	39/60
309076	39/60-69
309077	39/61
309080	39/1
309081	39/2
309090	40/
309091	40/1
309098	40/57
309099	40/59
309129	56/55
309240	18/11a
309241	18/10a
309242	18/12b
309243	18/13b
309244	18/11c
309245	18/10c
309246	18/11d
309247	18/10d
309270	18/9a-13a
309271	18/10b-14b
309272	18/10c-14c
309273	18/10d-14d
309279	18/14a
309280	18/14b
309281	18/14c
309282	18/14d
309284	18/10b
309285	18/3a
309532	48/2
309542	49/34
310089	20/71
310123	45/15
310604	1/25
310610	1/26
310613	1/27
310617	1/30
310752	21/175-184
310753	21/177
310755	21/179
310819	45/15-25
311511	12/31
311547	44/31
311548	44/31a
311553	12/22
311975	9/20
312780	62/58
313083	46/10
313722	36/7
313750	34/58
313823	34/78
313824	24/28
313852	54/9
313855	35/6
313882	34/15
314512	7/17
315508	14/46
316159	67/68
316167	34/43
319752	56/118
319753	56/119
319770	56/120
319806	56/28
319807	56/29
319849	56/150
319853	56/91
319862	56/182
319867	56/100-101
319868	56/100
319869	56/101
319967	10/7
319968	10/43-49
319969	10/25
319975	9/1
319979	47/16
319981	10/25-31
319986	10/26
319988	10/19
319989	10/20
319991	10/17
319992	10/18
319995	10/7-12
320013	20/39
320018	20/40
320035	20/5
320036	20/17
320047	20/25
320048	20/36
320168	20/41
320180	54/45
320186	42/30
320188	54/22
320189	54/23
320203	65/97
320204	65/96
320283	30/21
320456	30/41
320483	30/45
320485	30/1
320486	30/5
320488	30/3
320489	30/4
320490	30/54
320514	28/2
320515	28/3
320516	28/4
320517	28/5
320522	28/10
320531	28/29
320534	29/1-34
320535	29/1
320546	29/2
320548	29/29
320550	28/70-78
320551	28/77
320554	28/70
320555	28/82
320559	28/62
320560	28/63
320562	29/50-60
320563	29/57
320566	29/50
320568	29/42
320571	29/35
320572	29/36
320575	31/2c-13
320576	31/1
320578	31/2
320580	31/1a-13
320582	31/2d-13
320583	31/1b-13
320589	29/70
320599	30/55
320602	30/42
320603	30/43
320613	30/28
320614	30/30
320615	30/32
320616	30/35
320624	30/26
320631	30/29
320636	30/16
320645	30/13
320646	30/14
320664	30/17
320665	30/18
320674	31/21
320675	31/22
320676	31/8d
320678	31/4b

Numerisk deleregister/Numerical parts index

Delenr. Partno.	Fig/Ref Fig/Ref
320679	31/5b
320680	31/8b
320685	31/26
320686	31/5a
320687	31/8a
320688	31/11
320692	31/4c
320693	31/5c
320694	31/8c
320695	31/11
320711	28/44-47
320712	28/44
320715	28/46
320730	56/185-187
320731	56/185
320826	32/3
320839	69/34
321040	51/1-7
321041	51/12-21
321042	51/25-32
321043	51/35-36
321102	5/6-14
321103	5/6
321104	37/1-4
321105	37/1
321107	37/2
321109	5/15
321113	5/18
321115	5/28
321118	5/20
321124	5/26
321125	52/8
321127	5/32
321130	5/35
321131	5/30
321133	34/103
321141	34/104
321146	5/66
321152	5/34
321163	5/40-46
321164	5/40
321168	5/47
321170	5/45
321176	5/16
321182	5/24
321187	5/25
321191	5/41
321194	5/43
321198	5/2
321199	5/3
321200	5/60-64
321203	5/60
321206	5/62
321207	5/61
321271	5/7
321272	5/8
321273	5/9
321274	5/11
321275	5/12
321276	5/13
321277	5/14
321381	11/3
321382	11/11
321412	10/1
321413	10/16
321416	8/50
321424	8/53
321425	8/70
321426	8/71
321430	7/1a
321431	7/1b
321438	46/2
321450	8/1
321460	8/2
321482	8/56
321484	8/55
321610	12/1-40
321612	12/1-4
321613	12/1
321618	12/7-8
321619	12/7
321623	12/29
321665	14/63
321703	2/11
321705	2/15
321710	13/25-29
321711	13/25
321755	13/1
321756	13/2
321759	13/3
321760	13/4
321770	13/10-13
321771	13/10
321773	16/7
321776	16/2-10
321780	13/17-20
321781	13/17
321785	16/2
321786	16/3
321787	16/4
321788	16/5
321789	58/129
321802	14/67
321803	14/68
321805	13/73
321808	13/81
321809	13/80
321811	13/76
321812	13/78
321813	13/79
321815	13/88
321823	13/92
321824	13/90
321830	15/30-47
321831	15/31
321832	15/32
321836	15/42-45
321837	15/42
321840	15/44
321844	13/96
321845	13/89
321846	13/98
321848	62/69
321860	16/30-38
321861	16/30
321865	16/33
321872	14/43
321873	14/44
321876	12/51
321877	12/52
321884	14/50-56
321885	14/50
321886	14/55
321887	14/56
321888	43/221
321890	62/65-70
321900	15/1-27
321903	15/13
321920	16/12-28
321923	16/28
321924	16/13
321927	16/24
321928	16/23
321930	16/26
322004	20/50
322005	20/51
322007	20/62
322008	20/52
322009	20/54
322011	20/55
322018	20/100
322020	20/58
322021	20/59
322022	20/56
322025	20/57
322026	20/60
322027	20/61
322028	20/72
322033	38/40
322050	12/54-63
322052	12/55
322056	17/15
322057	17/16
322060	20/75-78
322065	20/75
322070	20/76
322089	60/50b
322090	60/50a
322210	6/23
322211	6/22
322216	6/10
322240	6/14-17
322241	6/14
322243	6/15
322269	49/37
322270	48/14
322271	48/16
322278	49/22
322281	48/26
322282	48/27
322283	48/28
322284	49/40
322285	49/23
322286	49/24
322288	49/8
322289	49/36
322292	49/31
322293	48/25
322297	48/15
322306	32/1-5
322309	66/80-94
322313	34/1
322314	36/1-15
322315	36/10
322316	36/13
322317	36/12-13
322318	36/13a
322319	35/40-50
322320	34/83
322321	34/87
322322	34/84
322324	34/88
322325	65/73
322326	65/31
322327	67/59
322329	65/98
322341	65/27
322342	65/23
322344	55/13
322346	69/28
322347	65/94
322348	65/37
322349	69/35
322355	67/4
322358	67/28
322360	66/70-79
322363	65/34
322364	66/74
322365	65/28
322366	65/29
322368	65/95
322372	65/72
322377	34/13
322378	34/66
322379	34/65
322381	65/64
322383	34/30
322384	34/37
322385	34/35
322386	34/27
322387	34/34
322388	34/28
322389	34/49
322390	34/52
322391	34/53
322392	34/5
322393	34/60
322394	37/5
322395	37/6
322396	37/7
322397	54/21
322398	34/32
322399	34/59
322446	33/42b
322447	33/42a
322448	33/40
322451	33/52
322460	33/53
322466	33/59
322470	33/54
322475	33/60
322479	33/66
322480	33/46
322484	33/48
322485	33/61
322490	33/65
322492	33/57b
322493	33/58b
322495	33/57a
322496	33/58a
322498	33/62
322542	41/20
322555	19/1-10
322560	19/11-20
322565	19/21-29
322570	19/30a-39a
322575	19/30b-39b
322580	19/30c-39c
322610	28/1a-33
322611	28/1a
322620	28/240-63
322622	28/40
322630	28/50-58
322631	28/50-58
322632	28/53
322633	28/55
322634	28/56
322635	28/54
322636	28/50
322640	28/41
322641	28/42
322643	30/50
322644	30/51
322647	30/52
322648	30/53
322800	33/30-34
322802	33/30
322809	33/31
322810	33/33
322814	49/15
322815	49/17
322820	48/17
322821	48/20
322842	49/5
322852	49/7
322858	49/1
322862	48/13
322865	49/8-13
322867	49/10
322868	49/9
322876	48/11
322877	48/12
322880	48/1
322883	48/10
322887	48/4
322890	48/30
322891	49/14
323000	1/1-13
323001	1/1
323004	1/25-30
323054	2/1-9
323056	2/1
323070	2/30
323074	2/44
323076	2/35
323080	65/15
323086	52/25
323132	2/60
323136	2/63
323140	2/64
323144	2/69
323344	43/231
323345	43/229
323346	43/230b
323348	43/230a
323407	69/25
323409	69/16
323431	65/90-98
323432	42/20-39
323437	20/63
323450	69/45
323456	69/1
323460	69/46
323464	69/1-39
323470	69/27
323471	69/33
323473	65/62
323474	69/39
323489	67/63
323494	67/72
323601	57/55-58
323602	57/55
323605	57/20-24
323606	57/20
323610	59/25
323611	59/1-15
323612	57/37
323614	59/12
323615	59/23
323616	59/20
323617	59/21
323620	59/1
323621	59/2
323624	59/10
323628	61/90-94
323629	61/90
323630	61/91
323639	61/110
323640	57/50-52
323641	57/50
323645	61/70-72
323646	61/70
323652	57/3
323653	57/4
323659	57/10-14
323662	57/10
323664	57/15
323668	60/46
323669	60/47
323671	57/31
323676	60/10
323677	60/11
323685	60/35
323686	60/36
323689	60/51
323698	60/38
323699	60/39
323708	62/56
323714	60/45
323722	62/80

Numerisk deleregister/Numerical parts index

Delenr. Partno.	Fig/Ref Fig/Ref
323726	63/10
323727	63/9
323729	63/1
323737	63/6
323738	63/2
323743	63/8
323744	62/82
323745	63/30
323746	63/15
323747	63/16
323749	61/101
323750	70/2a-9
323751	70/2b-9
323752	70/2a
323753	70/2b
323754	70/4
323755	70/3
323756	70/1-16
323757	70/15
323758	60/1
323759	60/2
323763	60/3
323770	57/36
323777	64/38
323779	64/39
323781	64/36
323784	60/29
323785	62/57
323786	63/12
323788	56/153
323789	70/20
323791	64/14
323792	64/15
323795	64/11
323796	64/12
323800	64/17
323803	64/19
323804	64/20
323806	64/22
323813	70/1
323814	28/34
323815	28/1b-34
323816	28/1b
323828	60/53
323829	60/54
323830	59/14
323834	64/34a-34c
323835	60/1-5
323842	60/5
323843	60/41
323846	64/31
323847	64/32
323848	59/26
323849	64/43
323857	62/25
323860	61/98
323874	56/171
323875	56/172
323880	56/160
323881	56/161
323885	56/175
323886	56/170
323888	56/171-199
323890	56/180
323891	56/181
323902	62/43
323906	62/46
323907	62/44
323912	62/25-40
323913	62/36
323915	62/29
323916	62/30
323920	62/1-19
323921	62/2
323922	62/3
323938	62/90
323939	62/91
323940	62/15
323952	61/99
323953	61/100
323960	61/116
323961	61/118
323962	61/117
323964	60/27a
323965	60/27b
323967	60/28a
323968	60/28b
324007	43/1
324013	43/2
324014	43/3
324017	43/125
324018	43/126
324020	43/28
324028	43/5
324030	43/239
324032	43/32
324036	43/110
324037	43/111
324040	43/15-
324041	43/16
324042	43/17
324046	43/30
324048	43/15
324050	43/50a-53
324051	43/50b-53
324058	43/50a
324059	43/52b
324061	43/55
324062	43/56
324066	43/195
324068	43/44
324070	43/141
324071	43/40
324075	43/35
324080	43/245
324085	43/203
324088	43/113
324095	43/206
324097	43/118
324098	43/128
324110	43/211
324113	43/136a
324114	43/136b
324115	43/135
324116	43/136
324118	43/213
324128	56/89
324129	56/90
324130	43/150
324131	43/151
324137	43/153
324140	29/106
324141	29/104
324142	29/105
324147	29/102
324148	29/103
324149	29/100
324151	43/45
324152	43/255
324153	43/256
324154	43/15-
324178	43/209
324181	56/82
324182	56/83
324191	20/104
324192	20/102
324199	56/81
324410	44/43
324426	45/50
324427	45/51
324432	44/50
324433	44/75
324435	45/55
324436	45/56
324440	45/1a-4
324441	45/1b-4
324443	45/1a
324444	45/1b
324455	46/1-7
324456	46/1
324460	45/35-43
324461	45/38
324462	45/42
324463	45/35
324464	45/36
324467	45/10
324471	45/11
324472	45/39
324474	33/33a
324476	44/71
324477	33/63
324480	33/53a
324484	33/54a
324488	33/53b
324605	53/11
324607	53/22
324609	53/12
324611	53/1-8
324612	53/1
324613	53/2
324614	53/4
324615	53/6
324617	53/18
324619	53/17-19
324622	43/242
324631	52/28
324632	52/21
324635	52/22
324640	52/29
324641	52/31
324648	54/65
324658	52/44
324660	53/21
324661	52/43
324663	54/86
324664	52/42
324666	54/10
324668	54/36
324669	54/56
324670	54/34
324671	54/71
324675	52/40
324682	52/41
324686	55/10
324687	52/53
324688	54/26
324689	54/47
324690	54/46
324691	54/24
324693	54/38
324694	54/40
324695	54/52
324697	54/25
324703	52/60
324712	52/66
324713	52/61
324715	52/62
324728	54/12
324729	54/18
324735	54/58
324736	54/54
324738	54/77
324739	54/73
324745	54/44
324746	54/51
324747	54/35
324762	52/15
324774	52/2
324783	52/4
324790	52/19
324802	54/90
324812	52/49
324813	52/50
324814	52/45
324815	52/46
324843	52/71
324847	52/69
324862	56/1
324875	56/2-12
324876	56/2
324878	56/40
324882	56/21
324885	56/22
324886	56/3
324887	56/52
324889	56/62
324890	56/115
324891	56/116
324893	56/60
324895	22/2
324896	56/117
324897	56/156
324898	56/197
324899	56/198
324900	56/50
324908	56/59
324918	56/88-101
324920	56/88
324921	56/92
324922	56/93
324925	56/155
324926	56/152
324940	56/**
324946	56/27
325028	38/46
325034	38/1
325041	38/2
325042	38/5
325044	38/6
325045	38/4
325046	38/28
325047	38/29
325066	38/20
325075	38/15
325076	38/16
325082	38/30
325083	38/48
325084	38/44
325085	38/45
325088	38/42
325090	38/60
325092	38/62
325095	47/5
325096	47/6
325097	47/27
325103	22/162
325105	27/4
325106	27/13
325108	25/31
325110	27/1-15
325111	27/1
325112	27/2
325113	27/15
325114	27/6
325115	27/7
325116	27/5
325117	27/11
325119	27/8
325120	22/106
325135	35/20
325136	35/16
325137	35/10
325138	35/11
325139	35/4
325140	35/7
325141	35/26
325142	35/27
325167	22/1
325187	22/50
325200	22/57
325202	22/58
325203	22/59
325208	22/60
325214	22/71
325215	22/72
325221	22/90
325236	22/110
325238	22/102
325239	22/103
325240	22/115b
325241	22/115a
325242	22/116
325243	22/114
325245	22/120-137
325248	22/122
325249	22/123
325250	22/124
325254	22/117
325255	22/118
325260	22/145-200
325262	22/145
325265	22/160
325270	22/197
325271	22/194
325272	22/195
325282	22/210
325283	22/214
325284	22/215
325286	22/217
325310	23/1
325312	23/3
325320	25/5
325325	25/15-24
325326	25/15
325328	25/7
325329	25/11
325508	28/1c-34
325510	28/1c
325527	28/1d
330514	6/1-25
330515	6/20
331175	45/37
331607	43/52a
332642	67/69
332662	47/29
332668	47/28
332982	48/32
333529	45/43
333901	20/15
333906	20/1
333911	20/16
333914	20/2
333915	20/10
333918	20/13
333922	20/4
333924	20/28
333925	20/29
333929	20/32
333931	20/15-27
333932	20/15-27
333936	20/1-14
333940	20/43
333944	20/45
333950	20/1-38
333960	20/1-46
334540	62/76
335020	49/50-52
335021	49/50
335022	49/51
335023	49/52

Numerisk deleregister/Numerical parts index

Delenr. Partno.	Fig/Ref Fig/Ref
335057	49/6
335067	49/21
335071	49/3
335076	62/55
335320	62/77
335542	43/102
400181	20/18
400241	12/60
401027	5/1
402547	2/3
402561	13/63
402570	13/62
410141	23/9
410336	57/57
410493	1/5
410635	5/49
410723	34/81
410724	34/82
410730	67/3
410731	34/33
410735	67/73
410746	34/20
410747	28/15
410748	35/45
410757	34/21
410784	34/40
410791	28/13
410842	2/31
410846	42/26
411120	42/13
411125	56/30
411127	54/60
411406	47/26
411408	54/62
411649	21/155
411885	34/36
412249	34/42
412344	1/2
412637	43/257
413004	49/11
413005	49/12
413006	48/5
415261	22/119
415622	35/5
419011	1/16
430794	52/24
430817	28/17
430828	47/25
432010	21/198
440086	56/151
440092	55/6
440180	45/40
440187	20/53
440288	8/57
440474	48/31
440493	48/21
440822	67/75
441031	54/59
441252	48/3
700501	52/20
710051	4/1-27
710052	4/1-14
710053	4/15-25
710070	3/1-3
710071	3/1
710072	3/2
710074	3/4-6
710076	3/5
710077	3/6
710080	3/9
710082	3/11
710084	3/13
710085	3/14
710086	3/15
710087	3/16
710089	3/18
710090	3/3
710091	3/4
710092	3/7
710093	3/8
710094	3/10
710095	3/12
710096	3/17
710102	53/17
710201	4/24
710202	4/14
710203	4/22
710204	4/21
710205	4/20
710206	4/19
710209	4/12
710210	4/11
710212	4/17
710213	4/16
710216	4/2
710217	4/1
710218	4/27
710219	4/10
710220	4/9
710221	4/8
710222	4/7
710223	4/6
710224	4/5
710225	4/4
710275	4/4-11
710306	4/1-3
710307	4/3
710309	4/13
710310	4/15-17
710311	4/15
710313	4/18
810650	20/64a
810660	43/117
810690	14/38
810714	21/26
810901	57/16
813316	5/68
813320	16/34
813325	18/11b
813330	59/13
813335	52/68
813340	43/230c
813360	34/19
813416	12/64
813420	12/20
813425	12/61
813430	13/68
813435	16/6
813440	15/24
813445	12/38
813450	52/74
813455	65/77
813460	39/41
813465	69/26
813470	34/77
813480	34/85
813516	52/30
813520	12/39
813525	12/50
813530	12/43
813535	2/32
813540	13/45
813545	12/56
813550	43/212
813570	12/28
813580	29/65
813590	21/10
813600	21/193
813601	21/192
813603	1/13
813611	5/44
813620	15/12
813621	15/41
813625	12/25
813630	12/63
813631	16/10
813635	12/41
813640	13/16
813645	14/54
813650	13/36
813660	12/62
813665	62/70
813670	2/18
813690	8/10
813700	30/27
813701	6/26
813702	29/30
813705	20/42
813825	5/21
813830	7/10
813835	30/44
813840	1/18
813845	13/31
813846	8/58
813850	20/44
813860	10/13
813870	12/46
813880	12/12
813890	13/85
813900	12/32
813901	1/8
813903	21/28
813905	63/22
814040	52/7
814050	52/11
814060	52/3
814080	8/54
814102	5/25
814105	5/17
821316	21/154
821330	31/3
821416	21/104
821420	2/43
821425	17/18
821430	28/57
821435	20/101
821520	12/53
821525	17/9
821530	21/202
821535	21/203
821540	29/39
821550	14/47
821560	29/37
821570	21/213
821580	43/129
821640	63/20
823525	10/10
825135	69/6
825155	69/4
825230	42/23
825425	20/14
825430	66/81
825432	54/48
825435	61/92
825455	13/24
825632	54/41
825640	20/26
825860	20/30a
825870	20/30b
825880	56/24
827220	21/216
827420	6/26
827445	6/51
827465	6/53
827655	57/24
831408	29/11
831412	28/18
837285	50/16
839316	15/45
839330	46/14
843435	23/10
850108	53/19
850112	62/59
850156	17/20
850158	12/20
850160	10/10
850162	15/14
850166	13/8
850170	56/42
852155	57/58
852156	16/34
852158	12/38
852160	1/13
852162	12/41
852166	1/8
852167	5/17
855380	33/47
860155	21/154
860156	16/34
860158	14/69
860159	43/258
860160	1/13
860163	12/41
860164	8/24
860166	13/31
860170	21/137
860175	21/108
860816	21/101
860860	13/24
862059	46/17
862263	26/4
862264	18/2
862267	18/9
862270	18/10
862277	18/4a
862279	18/8a
865164	20/78
865170	52/64
865220	33/58c
865225	7/29
865270	12/30
865275	63/14
865290	59/22
865332	39/55
865440	21/109
865550	5/31
866270	13/93
866280	7/18
866316	65/53
866326	16/8
866336	5/52
866340	63/11
866350	43/53
866430	52/67
866436	1/29
866440	28/72
866445	2/23
866450	14/32
866455	14/13
866520	13/43
866545	2/7
866550	56/12
866645	62/31
866650	5/36
867003	38/47
867013	43/31
867014	1/20
867053	62/78
867056	1/6
867061	16/9
867082	28/59
868420	43/39
868426	6/8
868430	12/19
868435	14/10
868440	20/23
868445	1/11
868460	14/7
868552	45/19
868562	14/17
868572	2/4
868580	20/21
868585	14/14
868595	14/6
868598	12/40
868604	43/38
868605	44/94
868606	12/18
868607	14/15
868608	20/22
868612	20/20
868715	21/111
868719	22/111
870144	38/31
870145	13/15
870146	2/12
870148	13/30
870230	43/54
870635	14/16
870636	56/5
870637	39/65
870660	14/5
870661	14/4
870671	12/36
870721	43/36
870726	28/20
870727	12/11
870728	13/64
870730	12/16
870731	12/17
870735	2/2
870736	21/159
870738	40/8
870740	21/128
870741	7/2
870742	20/19
870745	14/11
870820	45/17
870830	21/12
871254	45/21
871356	21/176
871362	14/19
871475	21/129
871510	14/20
872055	54/39
872079	65/5
872081	20/12
872390	7/4
873540	1/3
873541	2/9
873544	12/23
873545	12/21
900505	39/68
900507	44/90
900508	38/7
900510	22/198
901602	29/27
901604	29/28
901612	29/26
901802	14/42
901804	43/237
901813	43/234
901815	61/114
901830	14/59
901839	43/236
901844	15/25
901845	62/79a
901848	56/57
901854	14/66
901857	14/41